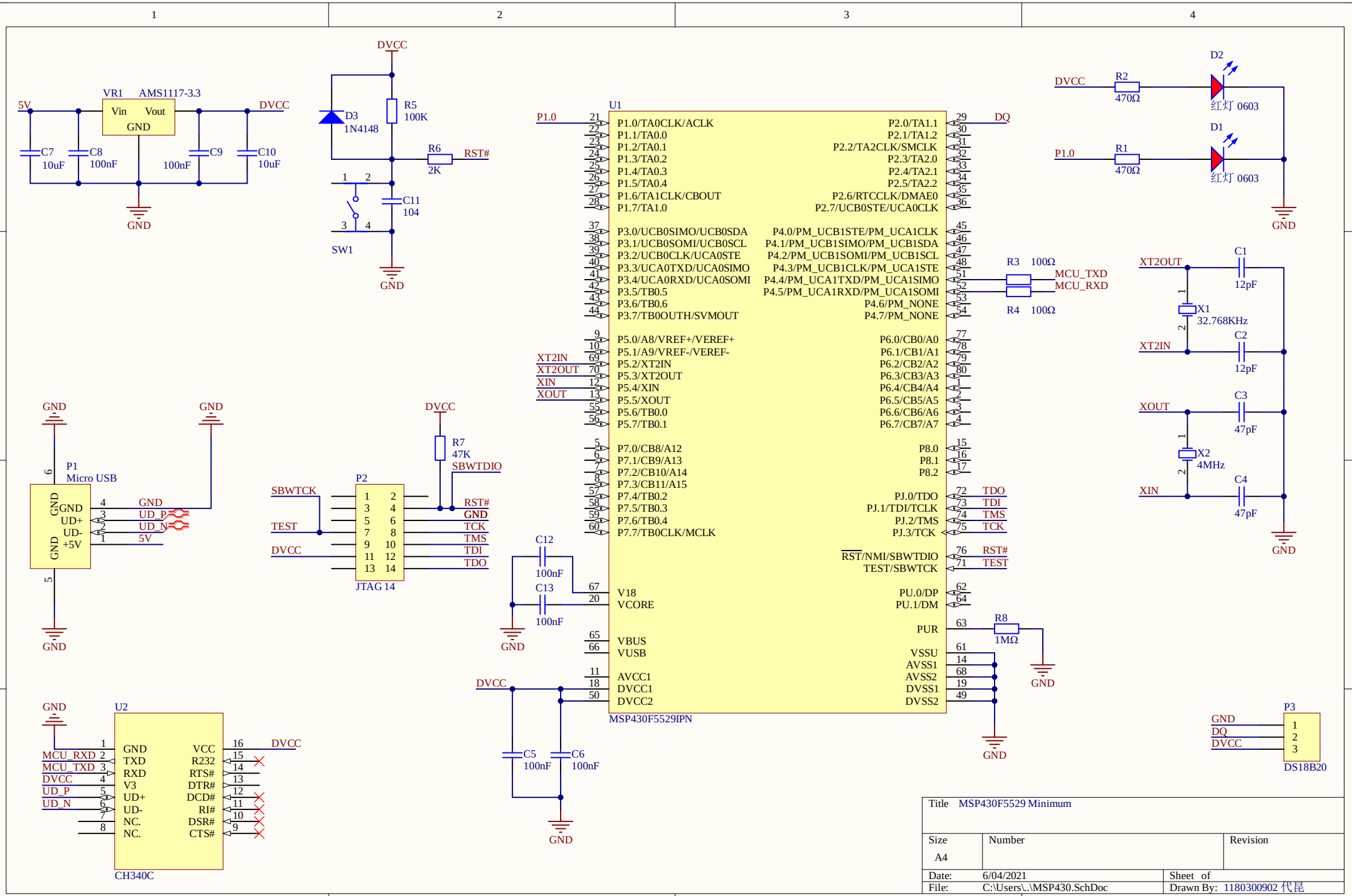

Title	MSP430F5529 Minimum	
Size A4	Number	Revision
Date: 6/04/2021		Sheet of
File: C:\Users\..\MSP430.SchDoc		Drawn By: 1180300902 代昆