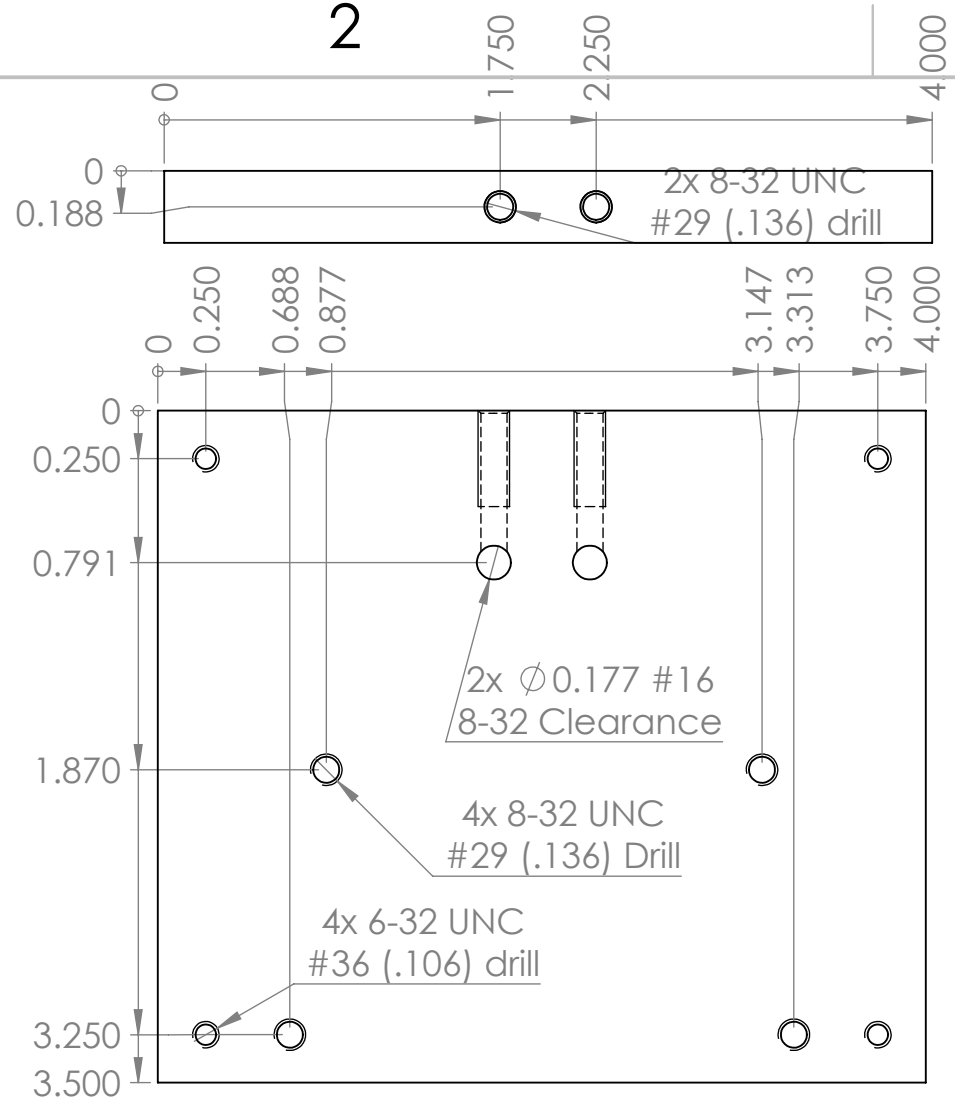

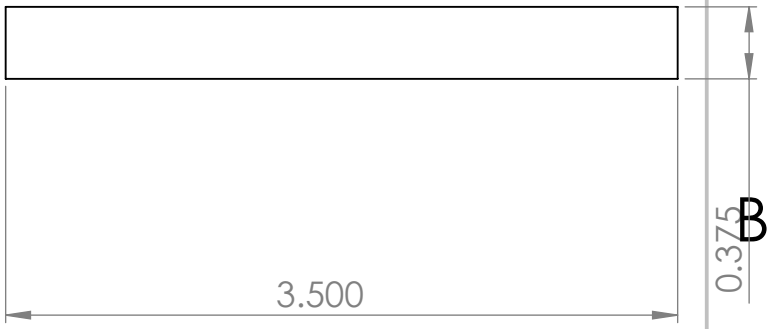

Material Default is Brass
Can also be Al 6061 for lower cost

UNLESS OTHERWISE SPECIFIED:		NAME	DATE
DIMENSIONS ARE IN INCHES TOLERANCES: FRACTIONAL ± ANGULAR: MACH ± BEND ± 0.5 TWO PLACE DECIMAL ±.010 THREE PLACE DECIMAL ±.005	DRAWN		
	CHECKED		
	ENG APPR.		
	MFG APPR.		
INTERPRET GEOMETRIC TOLERANCING PER:	Q.A.		
MATERIAL Brass	COMMENTS:		
FINISH Debur All Holes & Sharp Edges			
DO NOT SCALE DRAWING			

TITLE:
Double - Pendulum
Designer: Douglas Hutchings

SIZE	DWG. NO.	REV
A	Base	
SCALE: 1:1	WEIGHT: 1.59 lb	SHEET 1 OF 1

SOLIDWORKS Educational Product. For Instructional Use Only