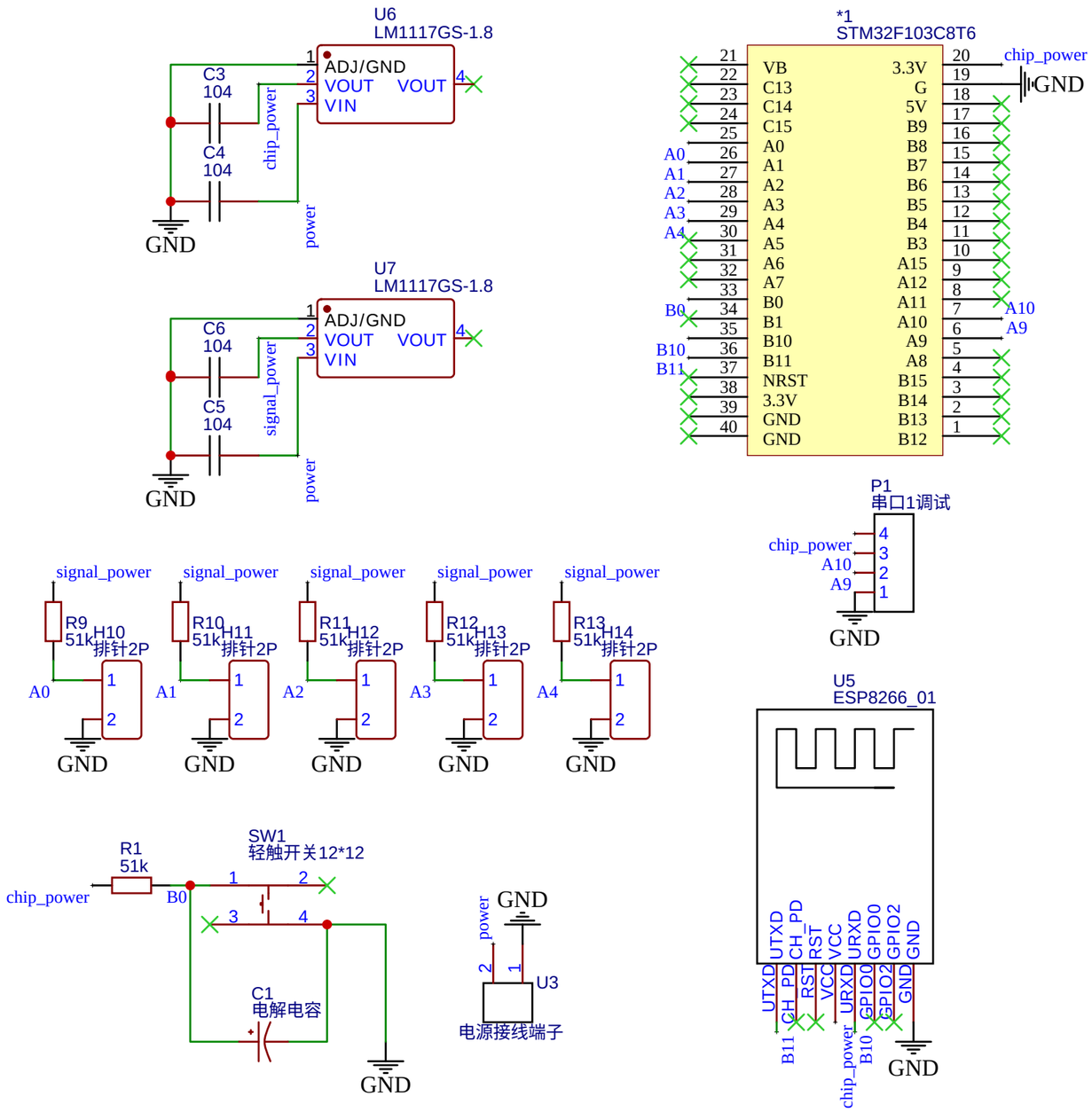

TITLE:	REV: 1.0
Company:	Sheet: 1/1
Date: 2021-08-10 Drawn By: dachou	