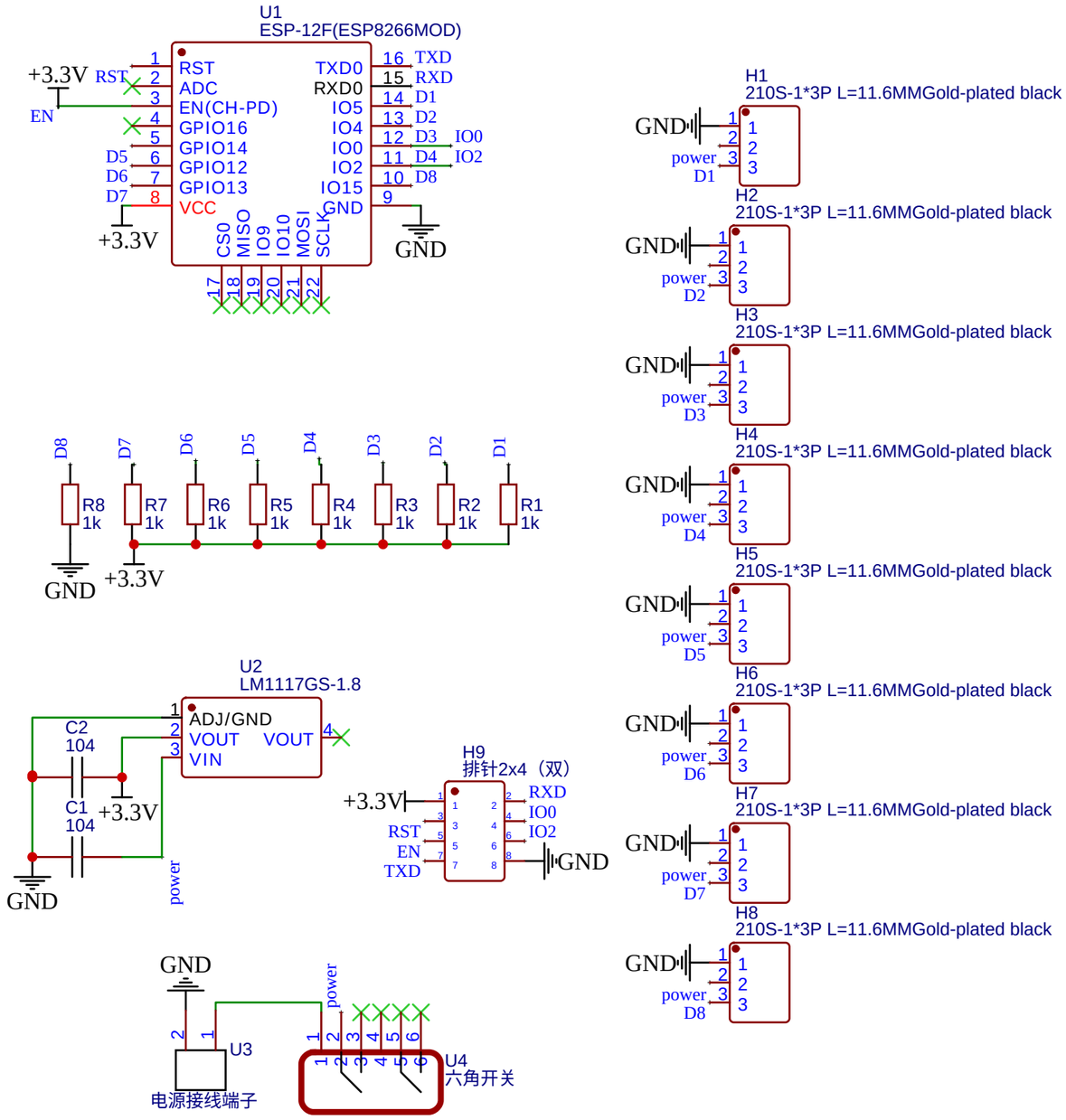

TITLE:		REV: 1.0
	Company:	Sheet: 1/1
	Date: 2021-08-10 Drawn By: dachou	