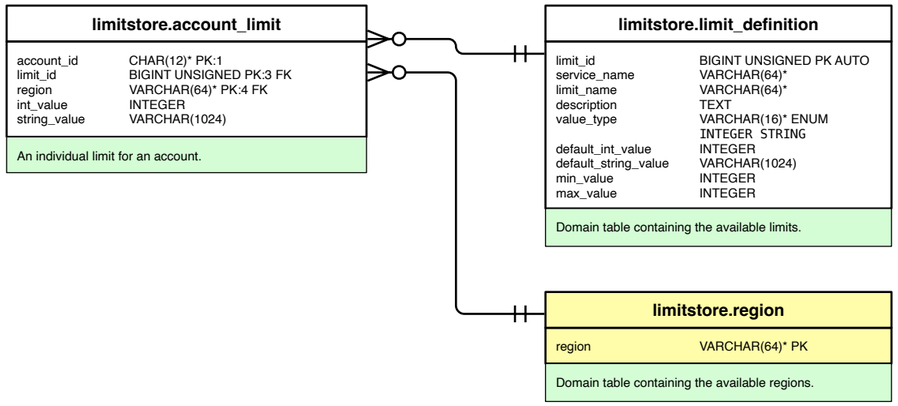
limitstore.account_limit
account_id CHAR(12)* PK:1
limit_id BIGINT UNSIGNED PK:3 FK
region VARCHAR(64)* PK:4 FK
int_value INTEGER
string_value VARCHAR(1024)
An individual limit for an account.
limitstore.limit_definition
limit_id BIGINT UNSIGNED PK AUTO
service_name VARCHAR(64)*
limit_name VARCHAR(64)*
description TEXT
value_type VARCHAR(16)* ENUM
INTEGER STRING
default_int_value INTEGER
default_string_value VARCHAR(1024)
min_value INTEGER
max_value INTEGER
Domain table containing the available limits.
limitstore.region
region VARCHAR(64)* PK
Domain table containing the available regions.

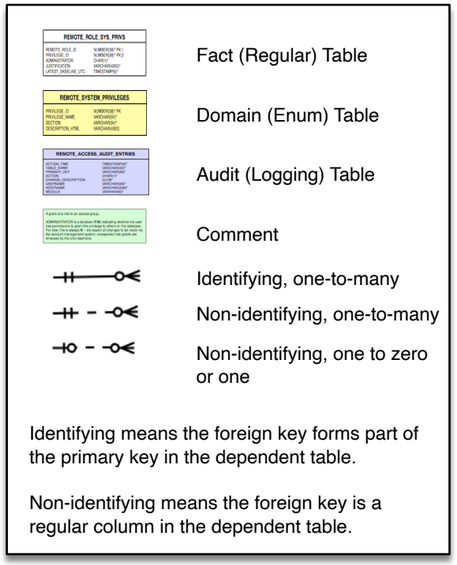
Fact (Regular) Table
Domain (Enum) Table
Audit (Logging) Table
Comment
Identifying, one-to-many
Non-identifying, one-to-many
Non-identifying, one to zero or one
Identifying means the foreign key forms part of the primary key in the dependent table.
Non-identifying means the foreign key is a regular column in the dependent table.

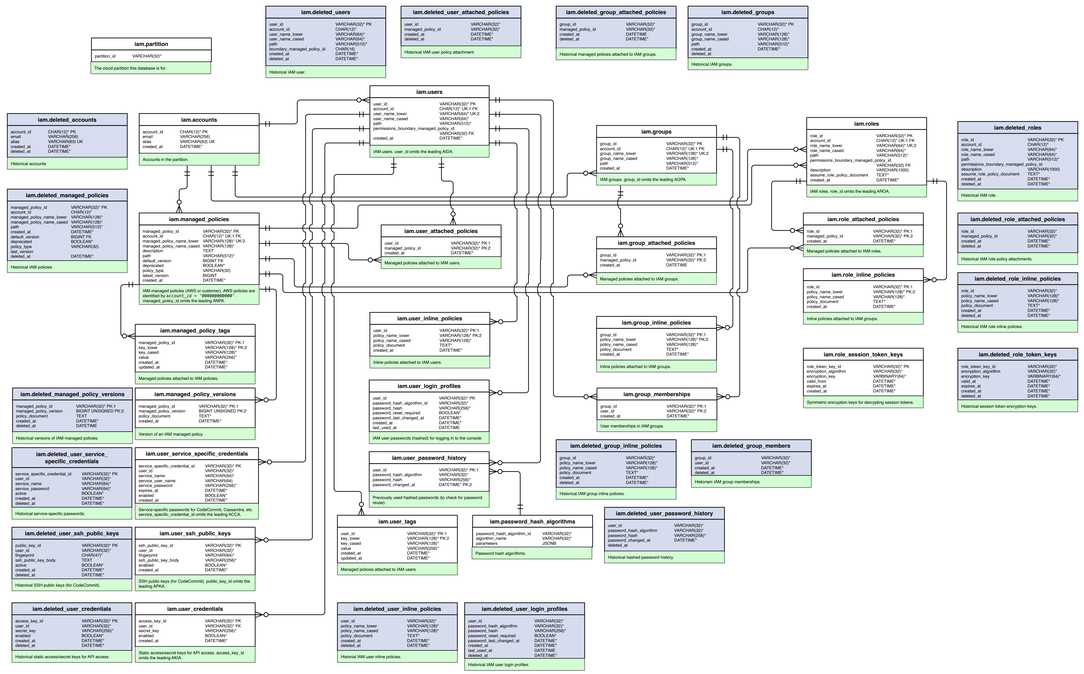
iam.partition
partition_id VARCHAR(32)*
The cloud partition this database is for.
iam.deleted_users
user_id VARCHAR(32)* PK
account_id CHAR(12)*
user_name_lower VARCHAR(64)*
user_name_cased VARCHAR(64)*
path VARCHAR(512)*
boundary_managed_policy_id CHAR(16)
created_at DATETIME*
deleted_at DATETIME*
Historical IAM user.
iam.deleted_user_attached_policies
user_id VARCHAR(32)*
managed_policy_id VARCHAR(32)*
created_at DATETIME*
deleted_at DATETIME*
Historical IAM user policy attachment
iam.deleted_group_attached_policies
group_id VARCHAR(32)*
managed_policy_id VARCHAR(32)*
created_at DATETIME*
deleted_at DATETIME*
Historical managed policies attached to IAM groups.
iam.deleted_groups
group_id VARCHAR(32)* PK
account_id CHAR(12)*
group_name_lower VARCHAR(128)*
group_name_cased VARCHAR(128)*
path VARCHAR(512)*
created_at DATETIME*
deleted_at
Historical IAM groups.
iam.users
user_id VARCHAR(32)* PK
account_id CHAR(12)* UK 1
user_name_lower VARCHAR(64)* UK 2
user_name_cased VARCHAR(64)*
path VARCHAR(512)*
permissions_boundary_managed_policy_id VARCHAR(32) FK
created_at DATETIME*
IAM users. user_id omits the leading AIDA.
iam.deleted_accounts
account_id CHAR(12)* PK
name VARCHAR(128)*
alias VARCHAR(63) UK
created_at DATETIME*
deleted_at DATETIME*
Historical accounts
iam.accounts
account_id CHAR(12)* PK
name VARCHAR(128)*
alias VARCHAR(63) UK
created_at DATETIME*
Accounts in the partition.
iam.groups
group_id VARCHAR(32)* PK
account_id CHAR(12)* FK
group_name_lower VARCHAR(128)* UK 2
group_name_cased VARCHAR(128)*
path VARCHAR(512)*
created_at DATETIME*
IAM groups. group_id omits the leading AGPA.
iam.roles
role_id VARCHAR(32)* PK
account_id CHAR(12)* UK 1 FK
role_name_lower VARCHAR(64)* UK 2
role_name_cased VARCHAR(64)*
path VARCHAR(512)*
permissions_boundary_managed_policy_id VARCHAR(32) FK
description VARCHAR(1000)
assume_role_policy_document TEXT*
created_at DATETIME*
deleted_at DATETIME*
IAM roles. role_id omits the leading ARDA.
iam.deleted_roles
role_id VARCHAR(32)* PK
account_id CHAR(12)*
role_name_lower VARCHAR(64)*
role_name_cased VARCHAR(64)*
path VARCHAR(512)*
permissions_boundary_managed_policy_id VARCHAR(32)*
description VARCHAR(1000)
assume_role_policy_document TEXT*
created_at DATETIME*
deleted_at DATETIME*
Historical IAM role.
iam.deleted_managed_policies
managed_policy_id VARCHAR(32)* PK
account_id CHAR(12)*
managed_policy_name_lower VARCHAR(128)*
managed_policy_name_cased VARCHAR(128)*
path VARCHAR(512)*
created_at DATETIME*
default_version BIGINT PK
deprecated BOOLEAN*
policy_type VARCHAR(20)
last_version
deleted_at DATETIME*
Historical IAM policies.
iam.managed_policies
managed_policy_id VARCHAR(32)* PK
account_id CHAR(12)* UK 1 FK
managed_policy_name_lower VARCHAR(128)* UK 2
managed_policy_name_cased VARCHAR(128)*
description TEXT
path VARCHAR(512)*
default_version BIGINT*
deprecated BOOLEAN*
policy_type VARCHAR(20)
attachments BIGINT*
created_at DATETIME*
IAM managed policies (ARN1 in customer). AWS policies are identified by account_id = '999999999999'.
managed_policy_id omits the leading AMPA.
iam.user_attached_policies
user_id VARCHAR(32)* PK 1
managed_policy_id VARCHAR(32)* PK 2
created_at DATETIME*
Managed policies attached to IAM users.
iam.group_attached_policies
group_id VARCHAR(32)* PK 1
managed_policy_id VARCHAR(32)* PK 2
created_at DATETIME*
Managed policies attached to IAM groups.
iam.role_attached_policies
role_id VARCHAR(32)* PK 1
managed_policy_id VARCHAR(32)* PK 2
created_at DATETIME*
Managed policies attached to IAM roles.
iam.deleted_role_attached_policies
role_id VARCHAR(32)*
managed_policy_id VARCHAR(32)*
created_at DATETIME*
deleted_at DATETIME*
Historical IAM role policy attachments.
iam.managed_policy_tags
managed_policy_id VARCHAR(32)* PK 1
tag_key_lower VARCHAR(128)* PK 2
tag_cased VARCHAR(128)*
value VARCHAR(256)*
created_at DATETIME*
updated_at DATETIME*
Managed policies attached to IAM policies.
iam.user_inline_policies
user_id VARCHAR(32)* PK 1
policy_name_lower VARCHAR(128)* PK 2
policy_name_cased VARCHAR(128)*
policy_document TEXT*
created_at DATETIME*
Inline policies attached to IAM users.
iam.group_inline_policies
group_id VARCHAR(32)* PK 1
policy_name_lower VARCHAR(128)* PK 2
policy_name_cased VARCHAR(128)*
policy_document TEXT*
created_at DATETIME*
Inline policies attached to IAM groups.
iam.role_inline_policies
role_id VARCHAR(32)* PK 1
policy_name_lower VARCHAR(128)* PK 2
policy_name_cased VARCHAR(128)*
policy_document TEXT*
created_at DATETIME*
Inline policies attached to IAM groups.
iam.deleted_role_inline_policies
role_id VARCHAR(32)*
policy_name_lower VARCHAR(128)*
policy_name_cased VARCHAR(128)*
policy_document TEXT*
created_at DATETIME*
deleted_at DATETIME*
Historical IAM role inline policies.
iam.deleted_managed_policy_versions
managed_policy_id VARCHAR(32)* PK 1
managed_policy_version BIGINT UNSIGNED PK 2
policy_document TEXT*
created_at DATETIME*
deleted_at DATETIME
Historical versions of IAM managed policies.
iam.managed_policy_versions
managed_policy_id VARCHAR(32)* PK 1
managed_policy_version BIGINT UNSIGNED PK 2
policy_document TEXT*
created_at DATETIME*
Version of an IAM managed policy.
iam.user_login_profiles
user_id VARCHAR(32)* PK
password_hash_algorithm_id VARCHAR(32)*
password_hash VARCHAR(256)*
password_reset_required BOOLEAN*
password_last_changed_at DATETIME*
created_at DATETIME*
last_used_at DATETIME
IAM user passwords (hashed) for logging in to the console.
iam.group_memberships
group_id VARCHAR(32)* PK 1
user_id VARCHAR(32)* PK 2
created_at DATETIME*
User memberships in IAM groups.
iam.role_session_token_keys
role_token_key_id VARCHAR(32)* PK
encryption_algorithm VARCHAR(32)*
encryption_key VARBINARY(64)*
valid_from DATETIME*
valid_until DATETIME*
created_at DATETIME*
Symmetric encryption keys for decrypting session tokens.
iam.deleted_role_token_keys
role_token_key_id VARCHAR(32)*
encryption_algorithm VARCHAR(32)*
encryption_key VARBINARY(64)*
valid_until DATETIME*
created_at DATETIME*
deleted_at DATETIME*
Historical session token encryption keys.
iam.deleted_user_service_specific_credentials
service_specific_credential_id VARCHAR(32)* PK
user_id VARCHAR(32)*
service_name VARCHAR(64)*
service_password VARCHAR(64)*
active BOOLEAN*
created_at DATETIME*
deleted_at DATETIME*
Historical service-specific passwords.
iam.user_service_specific_credentials
service_specific_credential_id VARCHAR(32)* PK
user_id VARCHAR(32)*
service_name VARCHAR(64)*
service_user_name VARCHAR(64)*
service_password VARCHAR(256)*
active BOOLEAN*
enabled BOOLEAN*
created_at DATETIME*
Service-specific passwords for CodeCommit, Cassandra, etc.
service_specific_credential_id omits the leading ACCA.
iam.deleted_group_inline_policies
group_id VARCHAR(32)*
policy_name_lower VARCHAR(128)*
policy_name_cased VARCHAR(128)*
policy_document TEXT*
created_at DATETIME*
deleted_at DATETIME*
Historical IAM group inline policies.
iam.deleted_group_members
group_id VARCHAR(32)*
user_id VARCHAR(32)*
created_at DATETIME*
deleted_at DATETIME*
Historian IAM group memberships.
iam.user_password_history
user_id VARCHAR(32)* PK 1
password_hash_algorithm VARCHAR(32)*
password_hash VARCHAR(256)*
password_changed_at DATETIME* PK 2
Previously used hashed passwords (to check for password reuse).
iam.password_hash_algorithms
password_hash_algorithm_id VARCHAR(32)*
algorithm_name VARCHAR(32)*
parameters JSON8
Password hash algorithms.
iam.deleted_user_password_history
user_id VARCHAR(32)*
password_hash_algorithm VARCHAR(32)*
password_hash VARCHAR(256)*
password_changed_at DATETIME*
deleted_at
Historical hashed password history.
iam.deleted_user_ssh_public_keys
public_key_id VARCHAR(32)* PK
user_id VARCHAR(32)*
fingerprint CHAR(47)*
ssh_public_key_body VARCHAR(16M)*
active BOOLEAN*
created_at DATETIME*
deleted_at DATETIME*
Historical SSH public keys (for CodeCommit).
iam.ssh_public_keys
ssh_public_key_id VARCHAR(32)* PK
user_id VARCHAR(32)*
fingerprint VARCHAR(64)*
ssh_public_key_body VARCHAR(16M)*
enabled BOOLEAN*
created_at DATETIME*
SSH public keys (for CodeCommit). public_key_id omits the leading APKA.
iam.user_tags
user_id VARCHAR(32)* PK 1
key_lower VARCHAR(128)* PK 2
key_cased VARCHAR(128)*
value TEXT*
created_at DATETIME*
updated_at DATETIME*
Managed policies attached to IAM users.
iam.deleted_user_credentials
access_key_id VARCHAR(32)* PK
user_id VARCHAR(32)*
key_id_hash VARCHAR(64)*
enabled BOOLEAN*
created_at DATETIME*
deleted_at DATETIME*
Historical static access/secret keys for API access.
iam.user_credentials
access_key_id VARCHAR(32)* PK
user_id VARCHAR(32)* FK
key_id_hash VARCHAR(64)*
enabled BOOLEAN*
created_at DATETIME*
Static access/secret keys for API access. access_key_id omits the leading AKIA.
iam.deleted_user_inline_policies
user_id VARCHAR(32)*
policy_name_lower VARCHAR(128)*
policy_name_cased VARCHAR(128)*
policy_document TEXT*
created_at DATETIME*
deleted_at DATETIME*
Historical IAM user inline policies.
iam.deleted_user_login_profiles
user_id VARCHAR(32)*
password_hash_algorithm VARCHAR(32)*
password_hash VARCHAR(256)*
password_reset_required BOOLEAN*
password_last_changed_at DATETIME*
created_at DATETIME*
last_used_at DATETIME
deleted_at DATETIME*
Historical IAM user login profiles.