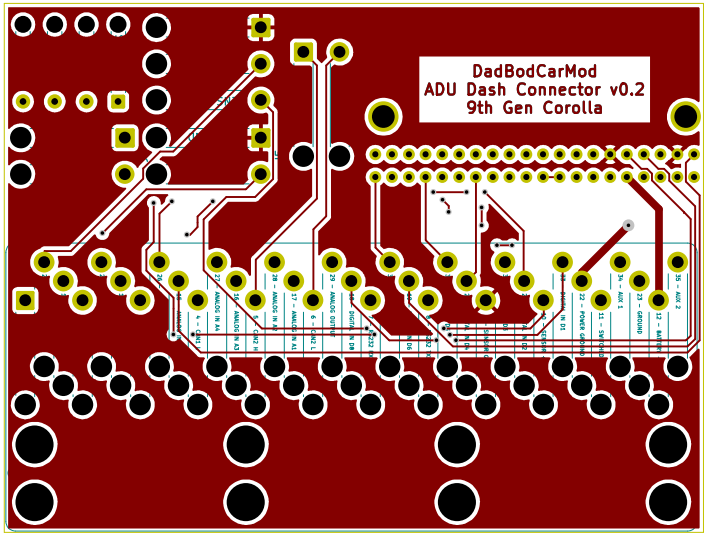

Options for ECU Masters EMU Black or factory ECU
Without Anti-lock Brake System (ABS)
ECU Masters Advanced Display Unit (ADU)
Toyota 9th Gen Corolla (With or Without Drive-By-Wire)

DadBodCarMod LLC

Sheet:
File: Corolla 2006 DBW Dash to ADU.kicad_pcb

Title: Corolla 9th Gen ADU Dash Connector

Size: USLetter	Date: 2024-01-14	**Rev: v0.2**
KiCad E.D.A. kicad (6.0.5)		Id: 1/1