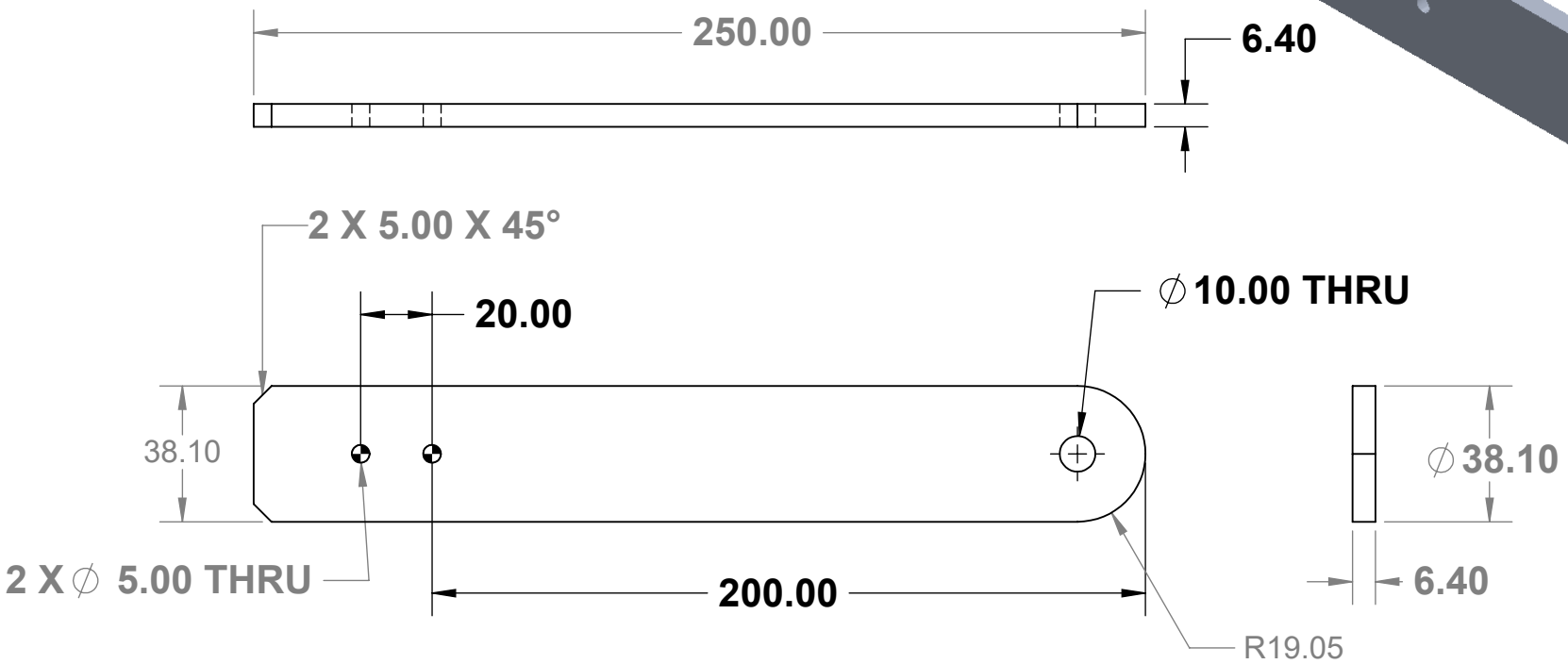

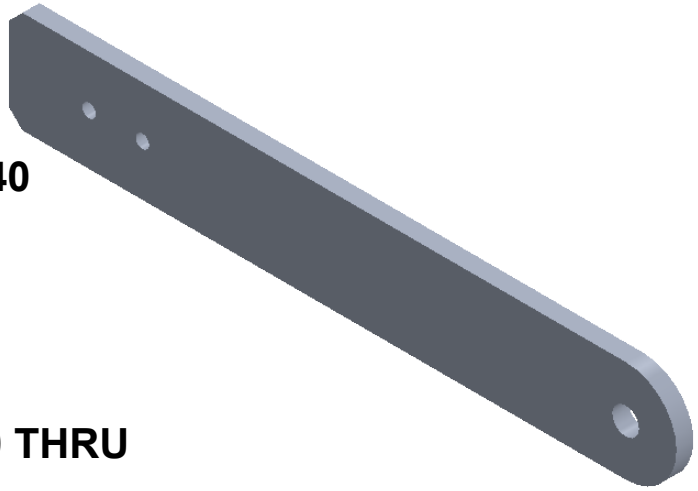

All Dimensions are in mm

UNLESS OTHERWISE SPECIFIED: DIMENSIONS ARE IN MILLIMETERS SURFACE FINISH: TOLERANCES: LINEAR: ANGULAR:	FINISH:				DEBURR AND BREAK SHARP EDGES	DO NOT SCALE DRAWING / REVISION
	NAME	SIGNATURE	DATE			TITLE:
DRAWN						
CHK'D						
APPV'D						
MFG						
Q.A				MATERIAL: 7075-T6, Plate (SS)		DWG NO. Knee_Frame-2 / A4
				WEIGHT: 165.93		SCALE:1:2 / SHEET 1 OF 1