Robust Control

Objective: Study on analysis and synthesis of feedback control systems with disturbances and model uncertainties

- Introduction
- Generalised description of feedback control systems
- Parameterisation of stabilising controllers
- Observers and observer-based controllers
- Norms of signals and systems and their computation
- Robustness analysis
- H_2 and $H_{infinity}$ optimal design
- LMI-aided design of robust control systems
- Optimal design of uncertain dynamic systems

Part 1: Introduction and basics

1 Introduction

Schematic description of a feedback control system

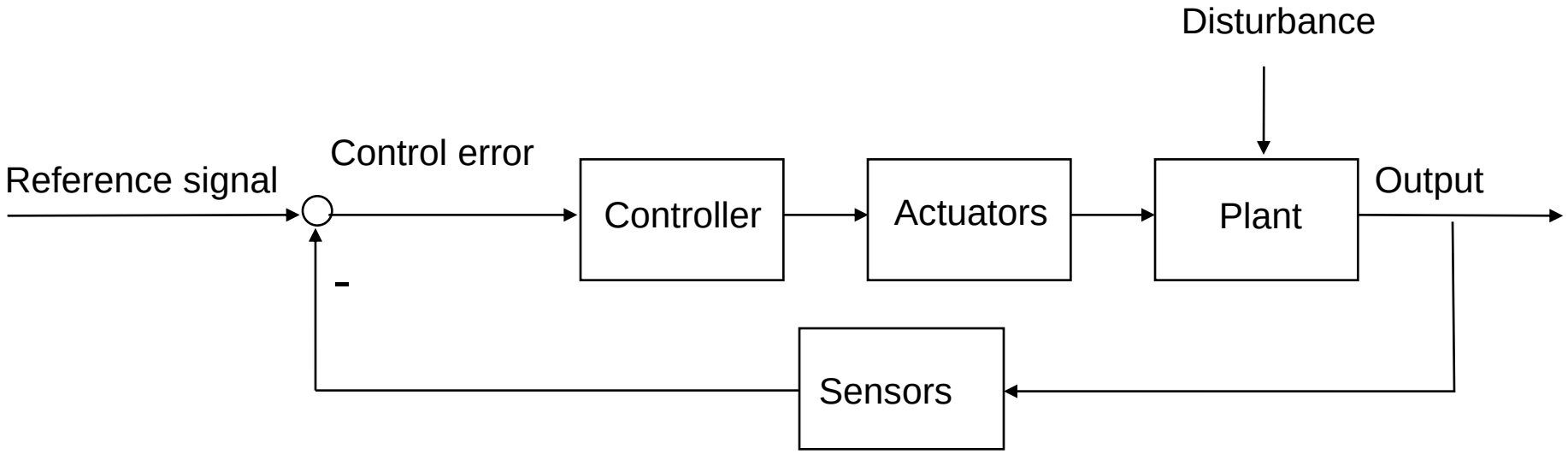

State of the art of the (past) courses on control theory:

Analysis and synthesis of feedback control systems on the assumption of a perfect model.
Study on the influence of disturbances is restricted to some simple cases
No parameter changes have been taken into account

The way towards to a successful feedback control

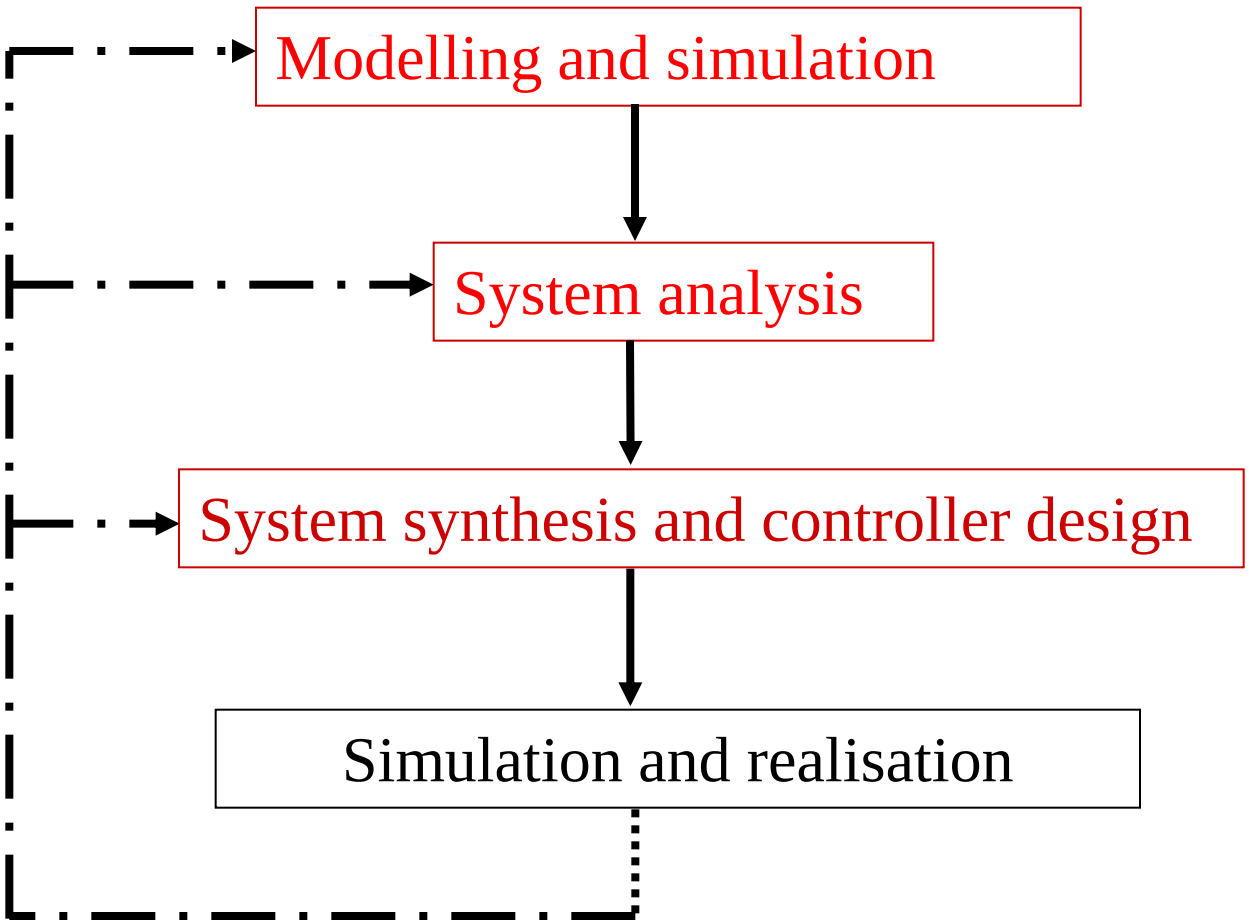

References:

Essential knowledge of control theory

- O. Föllinger, Regelungstechnik, 8. Auflage, Hüthig-Verlag, 1994.
- H. Unbehauen, Regelungstechnik II, 10. Auflage, Verlag-Vieweg, 2000.
- J. Lunze, Regelungstechnik II, 2. Auflage, Springer-Verlage, 1999.
- R. N. Clark, Control system dynamics, Cambridge University Press, 1996.
- T. Kailath, Linear systems, Prentice-Hall Inc., 1980.

Robust control

- **K. Zhou, Essentials of robust control, Prentice Hall, 1998**
- **Selected papers**

2. Generalised description of feedback control systems

2.1 Basic structure

Description of a (classical) feedback control loop

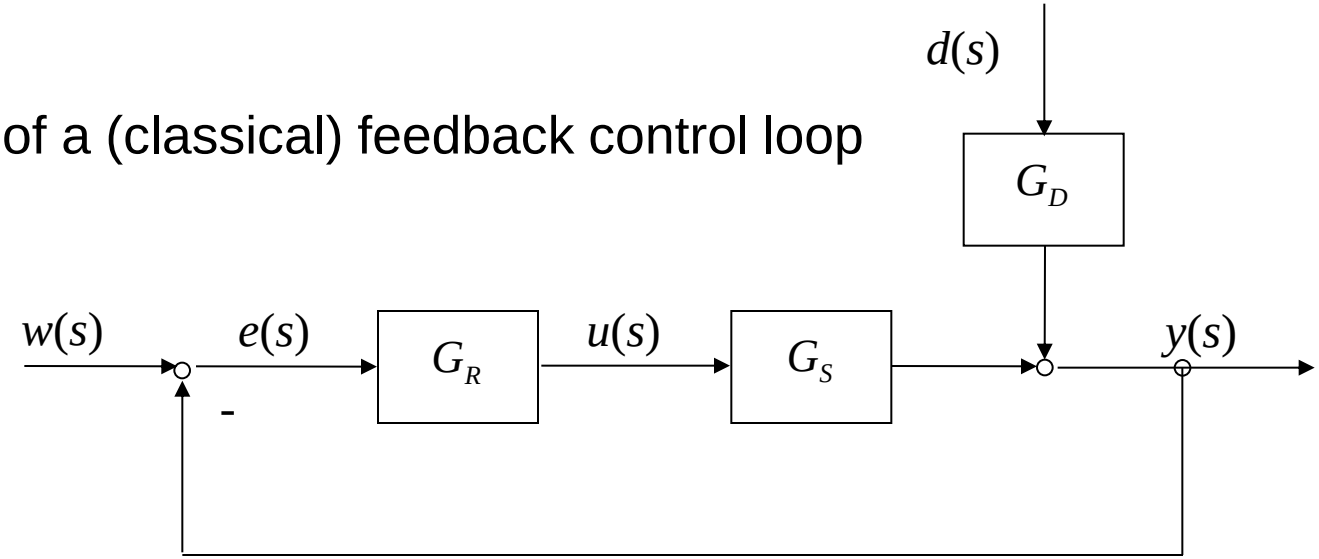

$$y(s) = G_S(s)u(s) + G_D(s)d(s)$$
$$u(s) = G_R(s)(w(s) - y(s))$$

The core of controller design:
Selection of $G_R(s)$

A special property: Control output = measurement

Control error:

$$y(s) = G_S(s)G_R(s)(w(s) - y(s)) + G_D(s)d(s) \Rightarrow$$

$$e(s) = w(s) - y(s) = \underbrace{\left(I + G_S(s)G_R(s)\right)^{-1} w(s)}_{\text{tracking behaviors}} - \underbrace{\left(I + G_S(s)G_R(s)\right)^{-1} G_D(s)d(s)}_{\text{disturbance behavior}}$$

Minimisation of control error:

$$\min_{G_R} \|e\| = \min_{G_R} \left\| \left(I + G_S(s)G_R(s)\right)^{-1} w(s) - \left(I + G_S(s)G_R(s)\right)^{-1} G_D(s)d(s) \right\|$$

Since the disturbances are unknown and the reference signal is often event driven (change on-line, depending the process behavior), it is reasonable to re-formulate the above problem into

$$\min_{G_R, \left\| \begin{bmatrix} d \\ w \end{bmatrix} \right\| = 1} \left\| \begin{bmatrix} W_{dis}(s)\left(I + G_S(s)G_R(s)\right)^{-1} G_d(s) & W_{tr}(s)\left(I + G_S(s)G_R(s)\right)^{-1} \end{bmatrix} \begin{bmatrix} d \\ w \end{bmatrix} \right\|$$

$W_{tr}(s), W_{dis}(s)$: weighting matrices

Example: Speed control of a DC motor

$$\frac{L_a}{R_a}\frac{di_a}{dt} + i_a = \frac{1}{R_a}u_a - \frac{k_E}{R_a}n$$

$$\Theta\frac{2\pi}{60}\frac{dn}{dt} = m_a - m_b = k_m i_a - m_b$$

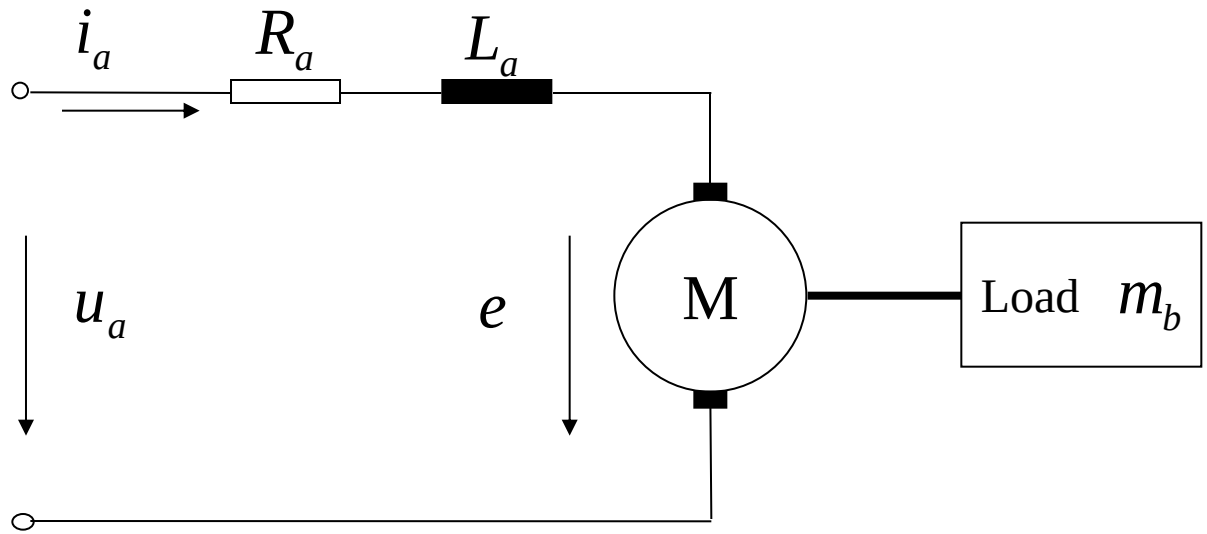

Control objective: The speed follows the reference signal

Measurements: Speed *n* and current i_a

Input: $u := u_a$

Disturbances $\bar{d} := m_b$

Example: Speed control of a DC motor (cont')

System description

$$y(s)=\begin{bmatrix} y_1(s) \\ y_2(s) \end{bmatrix}=\begin{bmatrix} n(s) \\ i_a(s) \end{bmatrix}$$

$$=\begin{bmatrix} \dfrac{60k_m}{2\pi\Theta s^2+2\pi\Theta R_a s+60k_E k_m} \\ \dfrac{s}{s^2+R_a s+60k_E k_m/(2\pi\Theta)} \end{bmatrix} u(s)+\begin{bmatrix} \dfrac{-60(L_a s+R_a)}{2\pi\Theta s^2+2\pi\Theta R_a s+60k_E k_m} \\ \dfrac{k_E}{2\pi\Theta s^2+2\pi\Theta R_a s+60k_E k_m} \end{bmatrix} \bar{d}(s)$$

$$=\underline{G}_{yu}(s)u(s)+\underline{G}_{y\bar{d}}(s)\bar{d}(s)$$

Possible structure of the controller:

$$u(s)=G_{uy_2}(s)y_2(s)+G_{ue}(s)e(s), e(s)=w(s)-y_1(s)$$

Control objective: minimising the control error

$$w(s)-n(s)=w(s)-y_1(s)=w(s)-G_{y_1u}(s)u(s)-G_{y_1\bar{d}}(s)\bar{d}(s)$$

Controller design: $G_{uy}(s)$ bwz. $G_{ue}(s)$

Example: Speed control of a DC motor (cont')

Block diagram of the control loop

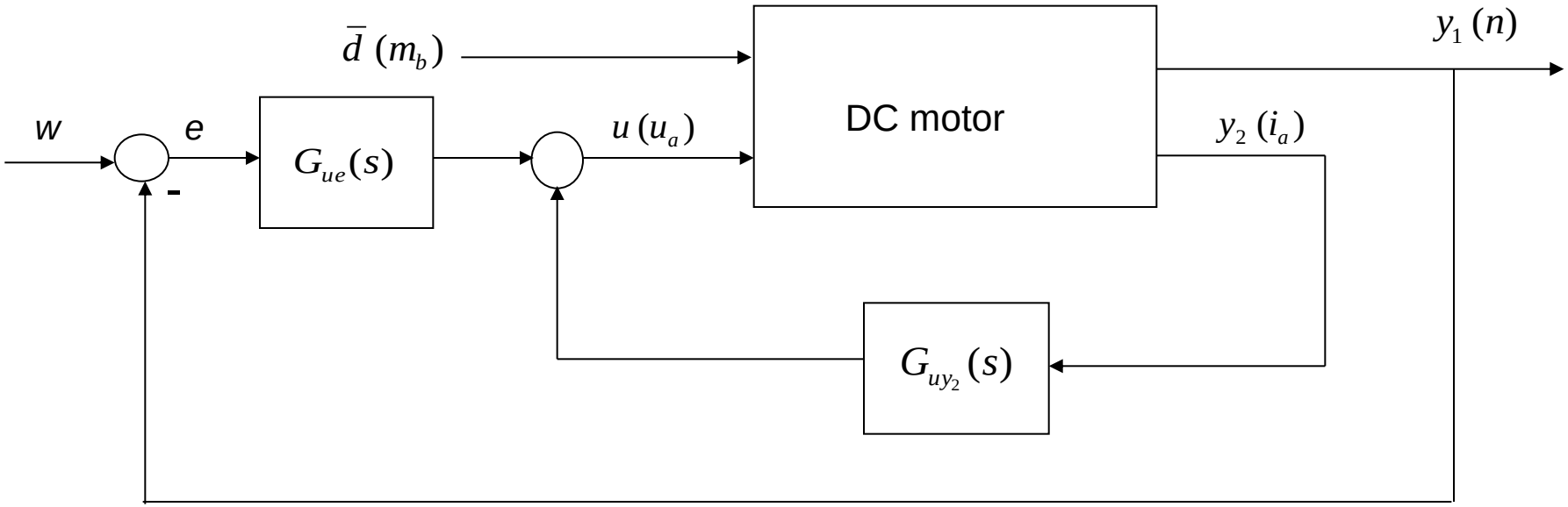

$$u(s) = G_{uy_2}(s)y_2(s) + G_{ue}(s)e(s), e(s) = w(s) - y_1(s)$$

A classic cascade structure

Example: Speed control of a DC motor (cont')

Re-structure of the control loop aiming at controller design

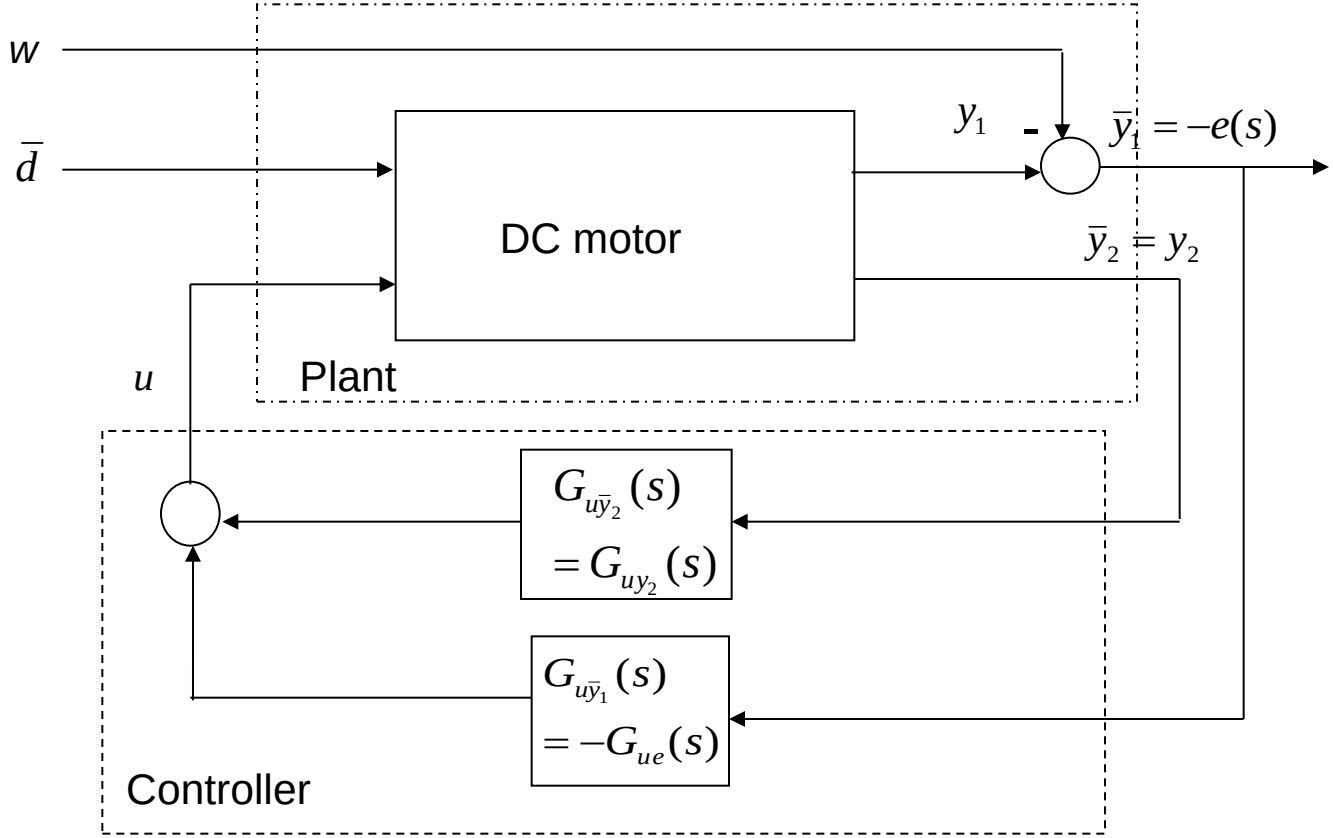

- Control output (objective) can be different from the system outputs (measurements)
- Also *w* is considered as disturbance

Example: Speed control of a DC motor (cont'):

Derivation of the new structure

$$\underline{y}(s) = \begin{bmatrix} y_1(s) \\ y_2(s) \end{bmatrix} = \underline{G}_{yu}(s)u(s) + \underline{G}_{y\bar{d}}(s)\bar{d}(s)$$

$$= \underline{G}_{yu}(s)\left(G_{uy_2}(s)y_2(s) - G_{ue}(s)y_1(s) + G_{ue}(s)w(s)\right) + \underline{G}_{y\bar{d}}(s)\bar{d}(s)$$

Introducing a new „measurable" vector

$$\begin{bmatrix} \bar{y}_1(s) \\ \bar{y}_2(s) \end{bmatrix} = \begin{bmatrix} y_1(s) - w(s) \\ y_2(s) \end{bmatrix}$$

leads to

$$u(s) = G_{uy_2}(s)\bar{y}_2(s) - G_{ue}(s)\bar{y}_1(s)$$

$$\underline{y}(s) = \underline{G}_{yu}(s)u(s) + \underline{G}_{y\bar{d}}(s)\bar{d}(s)$$

$$= \underline{G}_{yu}(s)\left(G_{uy_2}(s)\bar{y}_2(s) - G_{ue}(s)\bar{y}_1(s)\right) + \underline{G}_{y\bar{d}}(s)\bar{d}(s)$$

and moreover

$$\begin{bmatrix} \bar{y}_1(s) \\ \bar{y}_2(s) \end{bmatrix} = \begin{bmatrix} y_1(s) \\ y_2(s) \end{bmatrix} + \begin{bmatrix} -I \\ O \end{bmatrix} w(s) = \begin{bmatrix} G_{y_1 u}(s) \\ G_{y_2 u}(s) \end{bmatrix} u(s) + \begin{bmatrix} -I \\ O \end{bmatrix} w(s) + \begin{bmatrix} G_{y_1 \bar{d}}(s) \\ G_{y_2 \bar{d}}(s) \end{bmatrix} \bar{d}(s)$$

$$:= \underline{G}_{\bar{y}u}(s) u(s) + \underline{G}_{\bar{y}\bar{d}}(s) \bar{d}(s) + \underline{G}_{\bar{y}w}(s) w(s)$$

$$u(s) = \begin{bmatrix} G_{u\bar{y}_1}(s) & G_{u\bar{y}_2}(s) \end{bmatrix} \begin{bmatrix} \bar{y}_1(s) \\ \bar{y}_2(s) \end{bmatrix} = \underline{G}_{u\bar{y}}(s) \underline{\bar{y}}(s)$$

$$G_{u\bar{y}_1}(s) = -G_{ue}(s), \underline{G}_{\bar{y}w}(s) = \begin{bmatrix} -I \\ O \end{bmatrix}, \underline{G}_{\bar{y}u}(s) = \underline{G}_{yu}(s), \underline{G}_{\bar{y}\bar{d}}(s) = \underline{G}_{y\bar{d}}(s)$$

Control error

$$z(s) = w(s) - y_1(s) = w(s) - G_{y_1 u}(s) u(s) - G_{y_1 \bar{d}}(s) \bar{d}(s)$$

$$:= G_{zu}(s) u(s) + G_{zw}(s) w(s) + G_{z\bar{d}}(s) \bar{d}(s)$$

$$G_{zu}(s) = -G_{y_1 u}(s), G_{zw}(s) = I, G_{z\bar{d}}(s) = -G_{y_1 \bar{d}}(s)$$

Example: Speed control of a DC motor (cont')

General structure description

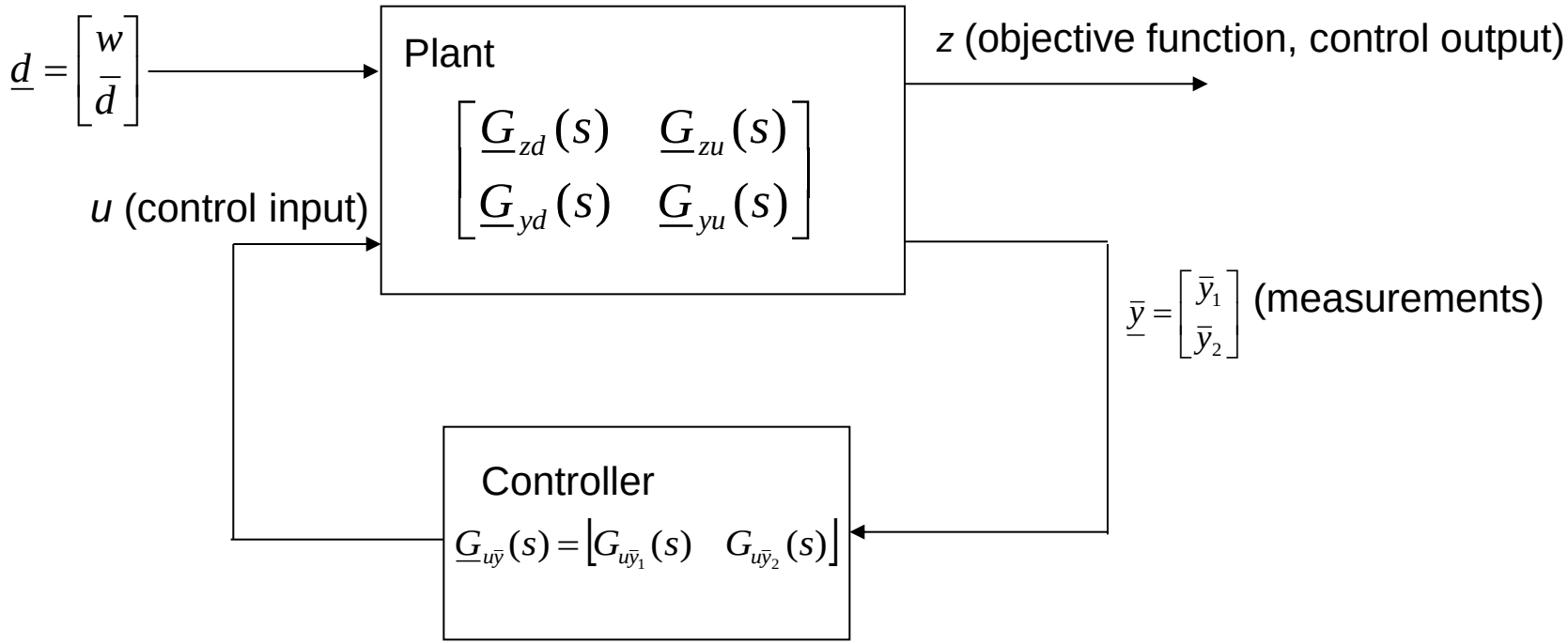

Control error is defined as control output

The generalised form of feedback control systems

Important variables and components:

- Input variables of the plant

  control signal *u*, disturbance $\bar{d}$ und reference signal *w*

- Output variables of the plant:

  vector $\bar{y}$ (measurement and control error)

  control error *z* = *w* – a part of measurements

- Input variables of the controller:

  Vector of the measurements $\bar{y}$

- Design objectives:

  Minimisation of z

- Design parameters: $G_{u\bar{y}}(s)$

The generalised form of feedback control systems (cont')

Description of the plant:

$$\underline{\bar{y}}(s) = \underline{G}_{\bar{y}u}(s)u(s) + \begin{bmatrix} \underline{G}_{\bar{y}w}(s) & \underline{G}_{\bar{y}\bar{d}}(s) \end{bmatrix} \begin{bmatrix} w(s) \\ \bar{d}(s) \end{bmatrix}$$

Description of the control output and objective

$$z(s) = G_{zu}(s)u(s) + \begin{bmatrix} G_{zw}(s) & G_{z\bar{d}}(s) \end{bmatrix} \begin{bmatrix} w(s) \\ \bar{d}(s) \end{bmatrix}$$

Minimisation of *z,* independent of *w, d*

$$\begin{bmatrix} \underline{\bar{y}}(s) \\ z(s) \end{bmatrix} = \begin{bmatrix} \underline{G}_{\bar{y}u}(s) & \underline{G}_{\bar{y}d}(s) \\ \underline{G}_{zu}(s) & \underline{G}_{zd}(s) \end{bmatrix} \begin{bmatrix} u(s) \\ \underline{d}(s) \end{bmatrix}, \underline{d}(s) = \begin{bmatrix} w(s) \\ \bar{d}(s) \end{bmatrix}$$

$$\underline{G}_{\bar{y}d}(s) = \begin{bmatrix} \underline{G}_{\bar{y}w}(s) & \underline{G}_{\bar{y}\bar{d}}(s) \end{bmatrix}, \underline{G}_{zd}(s) = \begin{bmatrix} G_{zw}(s) & G_{z\bar{d}}(s) \end{bmatrix}$$

Description of the controller: $u(s) = \underline{G}_{u\bar{y}}(s)\underline{\bar{y}}(s)$

Block diagram of the generalised form of the feedback control system

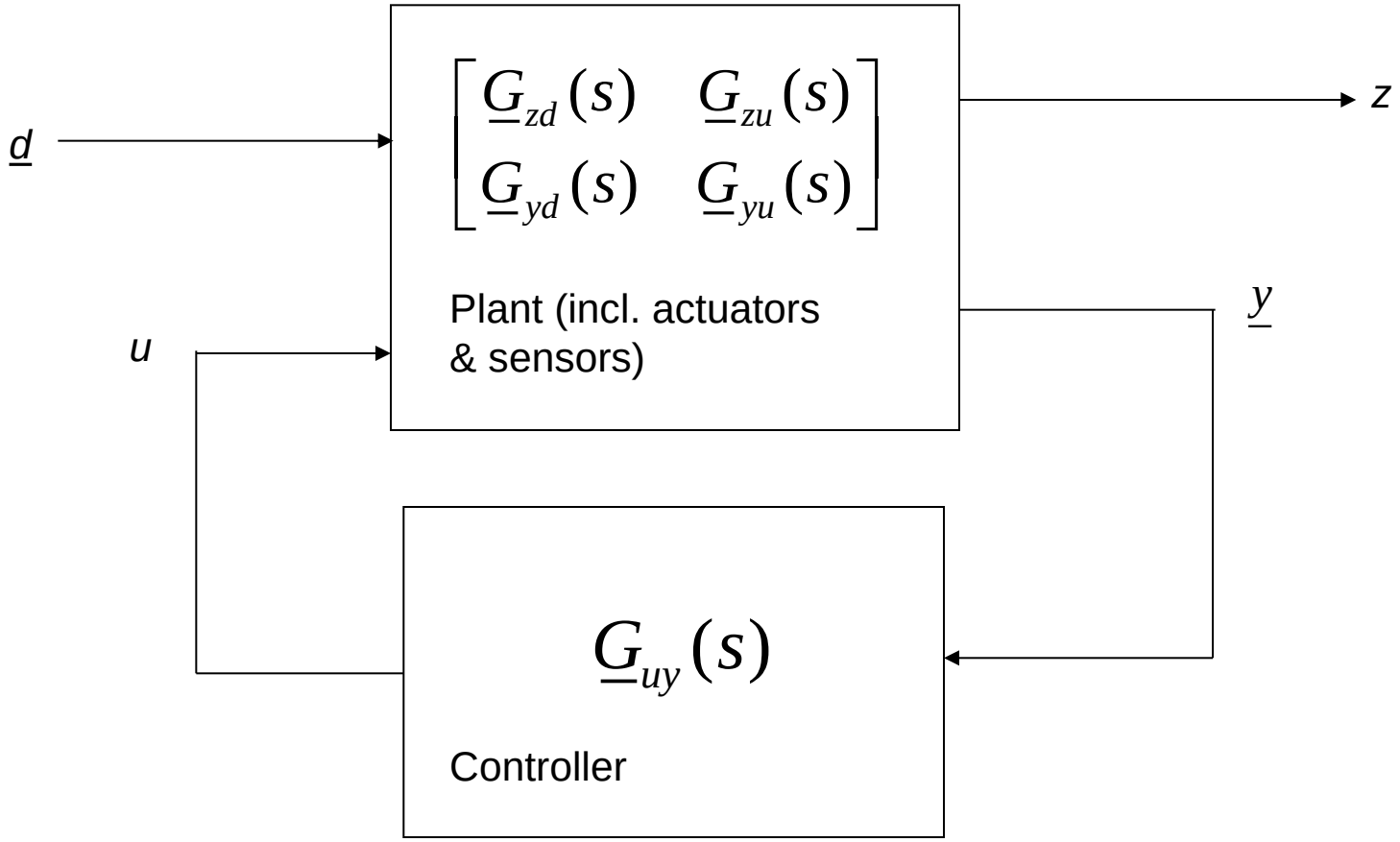

Major differences between the classical feedback control concept and the generalised description:

- no difference is made between the reference signals and disturbances
  - no difference between the tracking behavior and disturbance behavior
  - a different handling can be achieved by a suitable selection of weighting matrices
- output variables (measurements) can be different from controlled variables (control objective)
- the control objective is expressed in terms of the control variables
- the input signals of the controller are the output variables of the process
- the controller design is formulated as:
  - stabilisation
  - robustness against disturbances

2.2 Description of the generalised control systems in the state space

Example: Speed control of a DC motor

State space description of the plant

$$\begin{bmatrix} \dot{n} \\ \dot{i}_a \end{bmatrix} = \begin{bmatrix} 0 & \dfrac{60k_m}{2\pi\Theta} \\ -\dfrac{k_E}{L_a} & -\dfrac{R_a}{L_a} \end{bmatrix} \begin{bmatrix} n \\ i_a \end{bmatrix} + \begin{bmatrix} 0 \\ \dfrac{1}{L_a} \end{bmatrix} u_a + \begin{bmatrix} -\dfrac{60}{2\pi\Theta} \\ 0 \end{bmatrix} m_b \Rightarrow \underline{\dot{x}} = \underline{A}\underline{x} + \underline{B}u + \underline{E}\bar{d}$$

$$\begin{bmatrix} y_1 \\ y_2 \end{bmatrix} = \begin{bmatrix} 1 & 0 \\ 0 & 1 \end{bmatrix} \begin{bmatrix} n \\ i_a \end{bmatrix}, \underline{y} = \underline{x}$$

State feedback controller: $u = K_1(w - y_1) - K_2 y_2 = K_1 w - \underline{K}\,\underline{x}, \underline{K} = \begin{bmatrix} K_1 & K_2 \end{bmatrix}$

Example: Speed control of a DC motor (cont')

Structure of the control loop

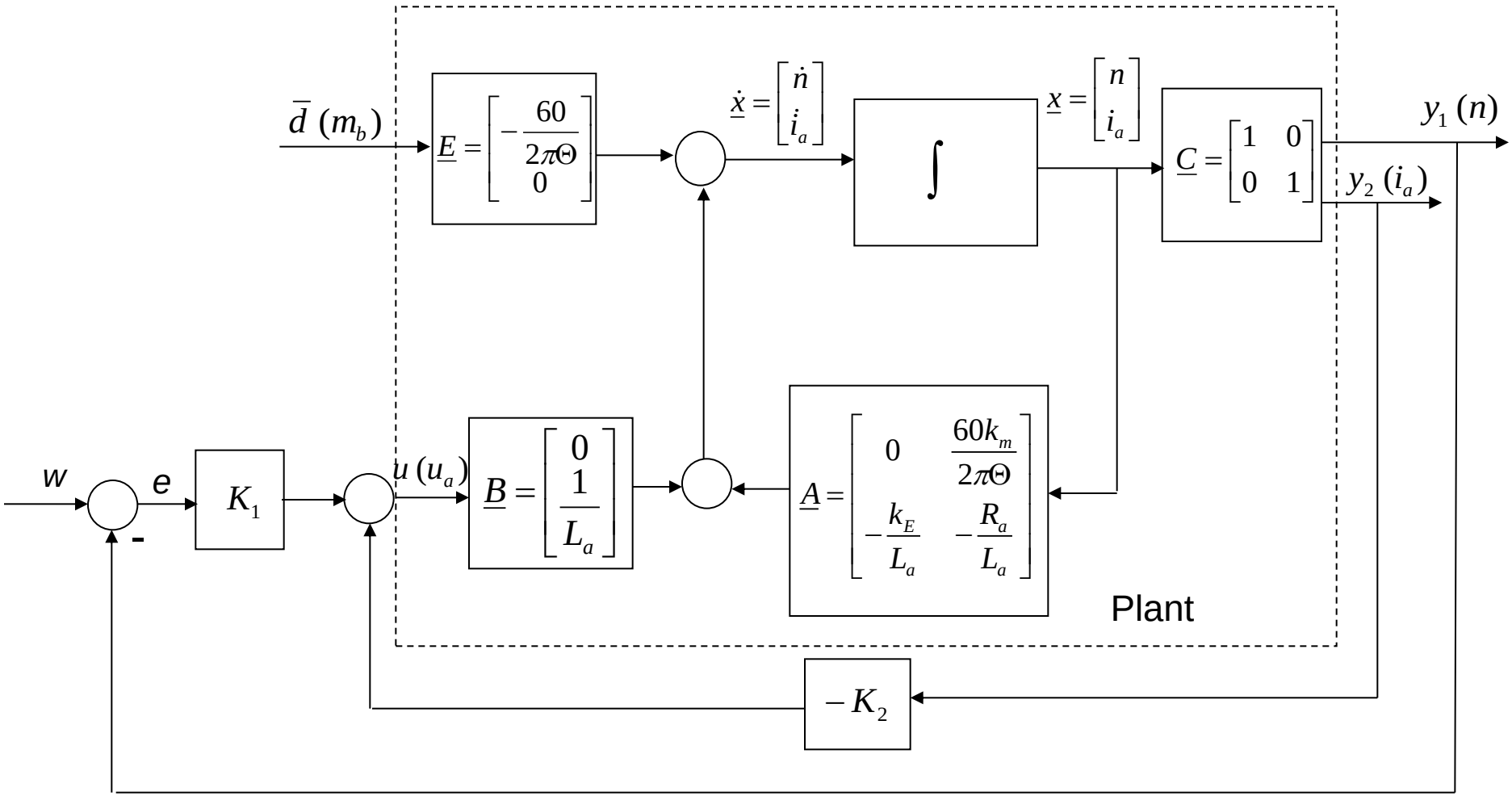

Example: Speed control of a DC motor (cont')

Re-structure of the control loop

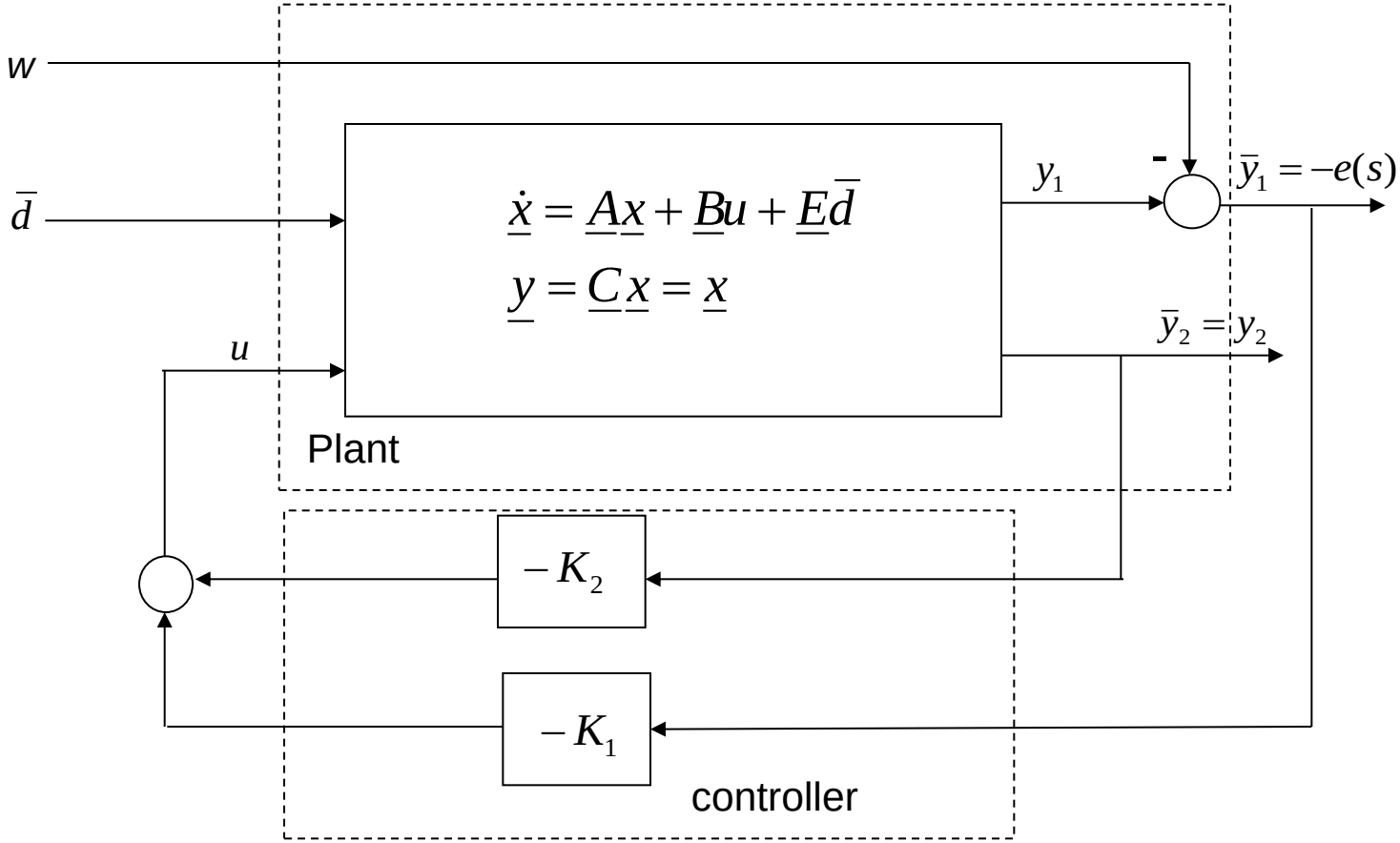

Here, matrix $\underline{C}$ is an identity matrix

Control objective:

$$z = w - n = w - y_1 \rightarrow \min$$

Generalised description:

$$\underline{\bar{y}} = \begin{bmatrix} \bar{y}_1 \\ \bar{y}_2 \end{bmatrix} = \begin{bmatrix} x_1 - w \\ x_2 \end{bmatrix} \qquad \longrightarrow$$

$$u = K_1 w - \underline{K} y = -\underline{K}\,\underline{\bar{y}}$$

$$\underline{\dot{x}} = \underline{A}\,\underline{x} + \underline{B} u + \underline{E}\bar{d}\,,\ \underline{\bar{y}} = \underline{x} + \underline{F}_w w,\ \underline{F}_w = \begin{bmatrix} -1 \\ 0 \end{bmatrix}$$

$$z = w - x_1$$

$$u = -\underline{K}\,\underline{\bar{y}}$$

Example: Speed control of a DC motor (cont')

Generalised description in the state space form

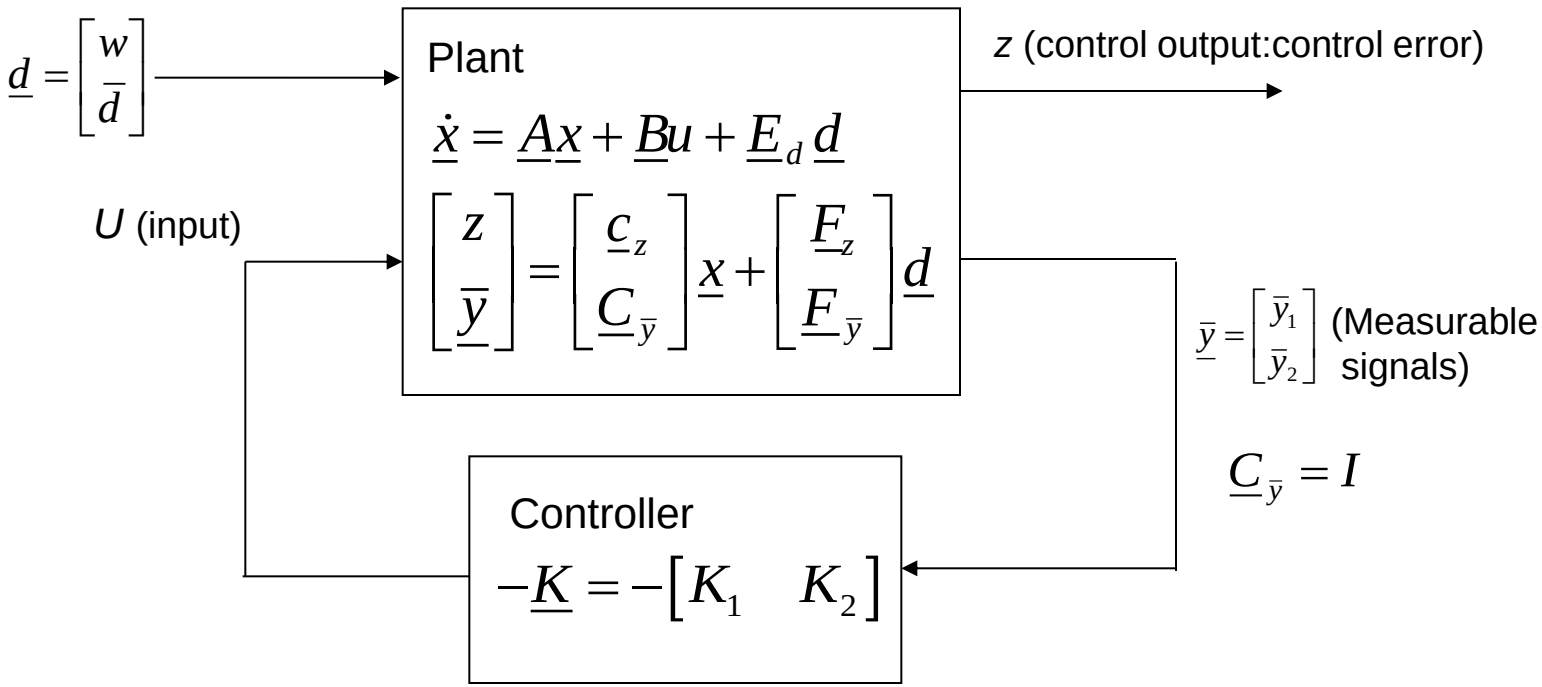

$$\underline{c}_z = \begin{bmatrix} -1 & 0 \end{bmatrix}, \underline{F}_z = \begin{bmatrix} 1 & 0 \end{bmatrix}, \underline{C}_{\bar{y}} = \underline{I}, \underline{F}_{\bar{y}} = \begin{bmatrix} -1 & 0 \\ 0 & 0 \end{bmatrix}, \underline{E}_d = \begin{bmatrix} 0 & -\dfrac{60}{2\pi\Theta} \\ 0 & 0 \end{bmatrix}$$

Generalised description of feedback control systems in the state space form

State space equation:

$$\underline{\dot{x}} = \underline{A}\underline{x} + Bu + \underline{E}_d \underline{d}, \underline{d} = \begin{bmatrix} w \\ \bar{d} \end{bmatrix}$$

Output equation:

$$\underline{\bar{y}} = \underline{C}_{\bar{y}} \underline{x} + \underline{D}_{\bar{y}} u + \underline{F}_{\bar{y}} \underline{d}, \underline{C}_{\bar{y}} = \underline{I}$$

Control output:

$$z = \underline{c}_z \underline{x} + D_z u + \underline{F}_z \underline{d}$$

Controller:

$$u = -\underline{K}\underline{\bar{y}} \text{ oder } u(s) = \underline{G}_{u\bar{y}}(s)\underline{\bar{y}}(s)$$

Design parameter: $\underline{K}$ oder $G_{u\bar{y}}(s)$

The compact form

$$\dot{\underline{x}} = \underline{A}\underline{x} + Bu + \underline{E}\underline{d}, \begin{bmatrix} \underline{\bar{y}} \\ z \end{bmatrix} = \begin{bmatrix} \underline{C}_{\bar{y}} \\ \underline{c}_z \end{bmatrix} \underline{x} + \begin{bmatrix} \underline{D}_{\bar{y}} \\ D_z \end{bmatrix} u + \begin{bmatrix} \underline{F}_{\bar{y}} \\ \underline{F}_z \end{bmatrix} \underline{d}$$

$$u = -\underline{K}\underline{\bar{y}}$$

Advantages of introducing the generalised description form

- The new defined output variables are plant outputs and control error
- Formulation of the control objective in an unified form
- unified description of the classic and state-space control structures
- Development of general design methods

2.3 Some typical control problems presented in the standard configuration

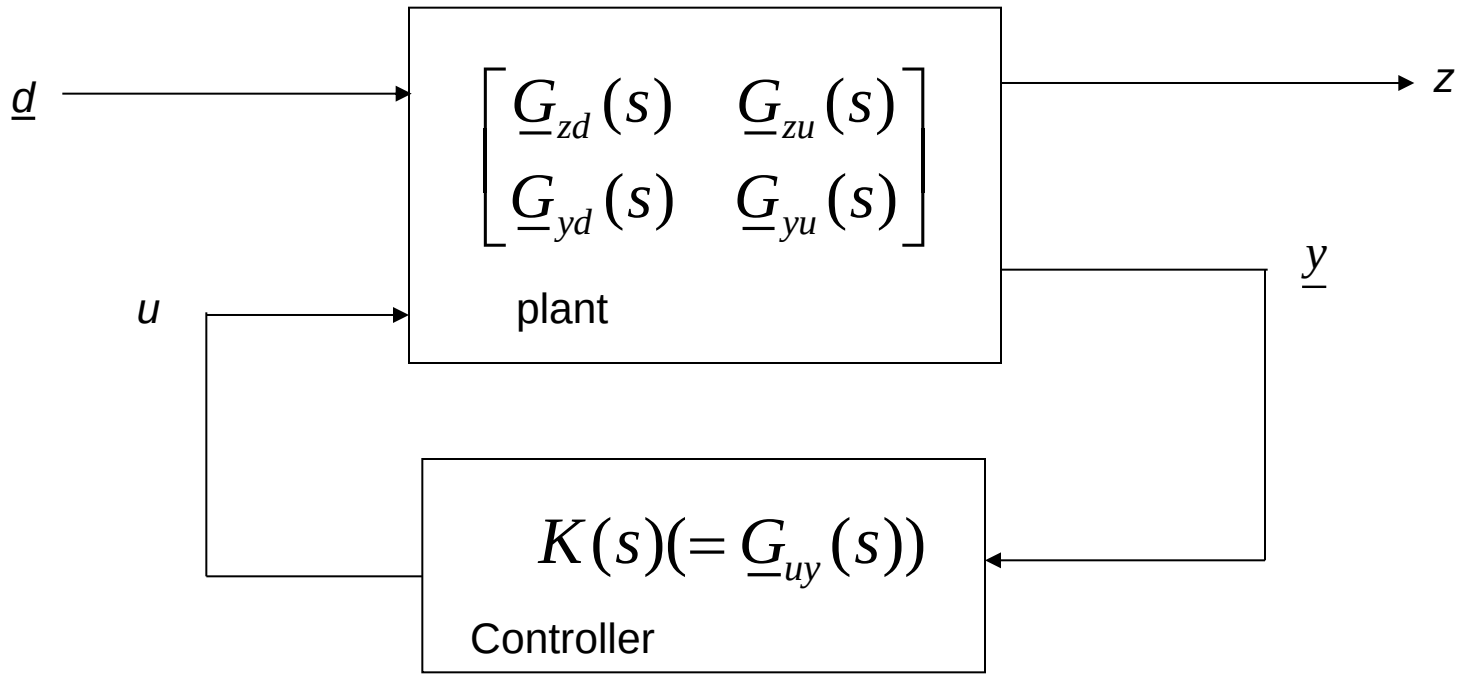

Standard control problem: given the generalised form of the control system, find the controller *K(s)* s.t. the whole system is stable and the transfer function (matrix) from the disturbance to the control output, i.e.

$$z = \left(G_{zd} + G_{zu} K \left(I - G_{yu} K \right)^{-1} G_{yd} \right) d$$

is minimised.

The standard control problem

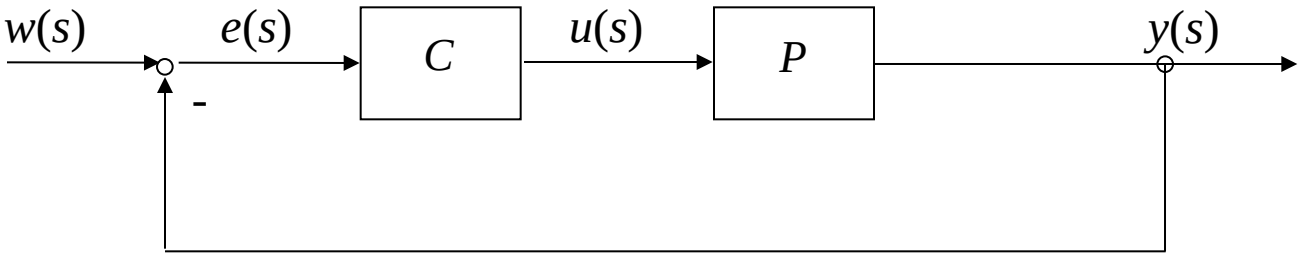

Control objective: the control error should be minimised

Controller variable (control objective): $z = w - y$

Measurement (input of the controller): $w - y$

$$d = w \Rightarrow G_{zd} = I, G_{zu} = -P, G_{yd} = I, G_{yu} = -P, K(s) = C(s)$$

$$z = \left(G_{zd} + G_{zu} K \left(I - G_{yu} K \right)^{-1} G_{yd} \right) d$$

$$= \left(I - PC \left(I + PC \right)^{-1} \right) d = \left(I + PC \right)^{-1} w$$

Model-matching problem:

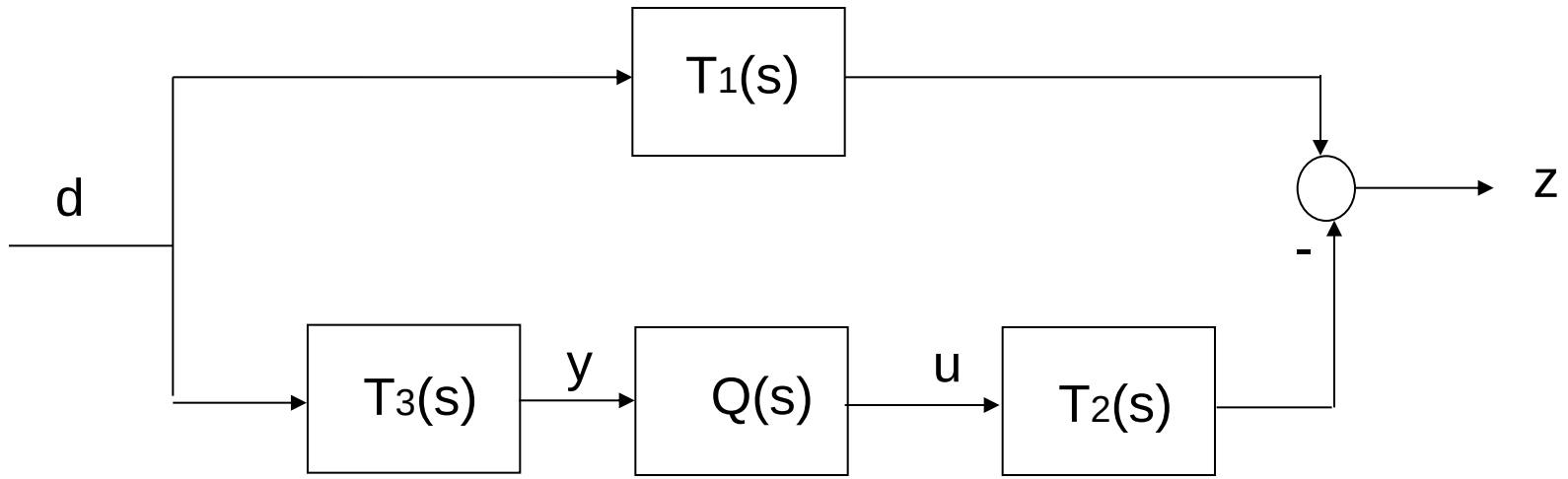

Find a stable Q(s) s.t.

$$z = \left(T_1 - T_2 Q T_3\right) d$$

is minimised.

It can be re-formulated into the standard control problem:

$$G_{zd}(s) = T_1(s), G_{zu}(s) = -T_2(s), G_{yd}(s) = T_3(s), G_{yu}(s) = 0, G_{uy}(s) = K(s) = Q(s)$$

Tracking problem:

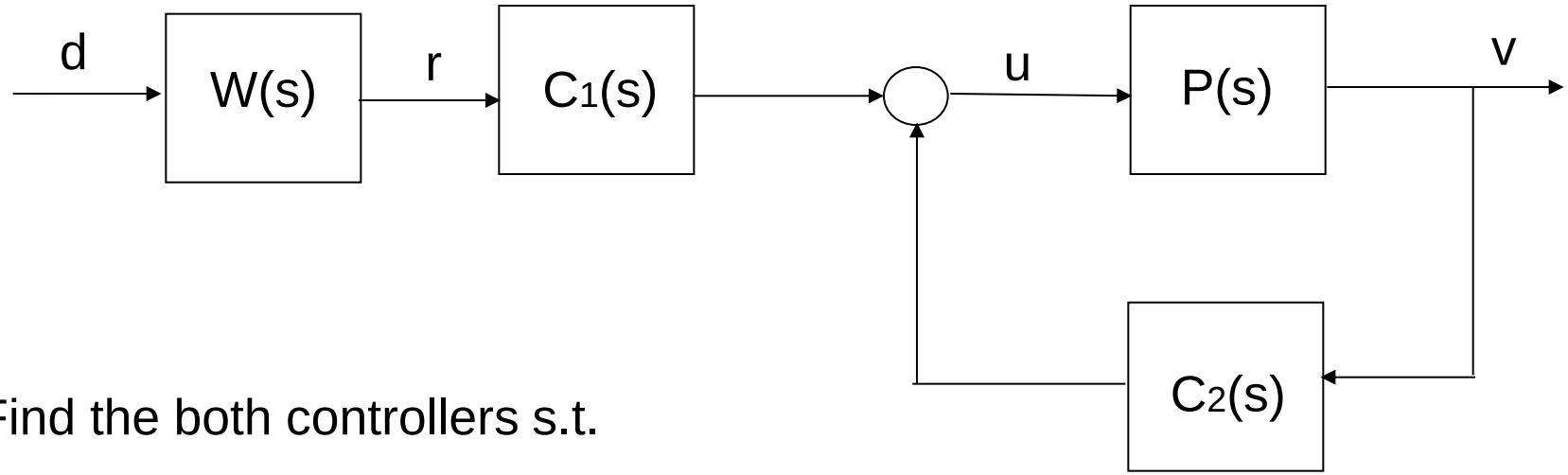

Find the both controllers s.t.

$$\left(\|r-v\|^2+\|\rho u\|^2\right)^{1/2}$$

is minimised.

It can be re-formulated into the standard control problem:

$$z=\begin{bmatrix} r-v \\ \rho u \end{bmatrix}, y=\begin{bmatrix} r \\ v \end{bmatrix}, K=\begin{bmatrix} C_1 & C_2 \end{bmatrix}, G_{zd}=\begin{bmatrix} W \\ 0 \end{bmatrix}, G_{zu}=\begin{bmatrix} -P \\ \rho I \end{bmatrix}, G_{yd}=\begin{bmatrix} W \\ 0 \end{bmatrix}, G_{yu}=\begin{bmatrix} 0 \\ P \end{bmatrix}$$

3. Internal stability and stabilization issues

3.1 Notations

For the simplification purpose, the following notations will be used in the remains of this course:

- *A,B,C, ….* stand for matrices
- *a,b,c, ….* stand for vectors
- $\begin{bmatrix} G_{zd}(s) & G_{zu}(s) \\ G_{yd}(s) & G_{yu}(s) \end{bmatrix} = \begin{bmatrix} G_{11}(s) & G_{12}(s) \\ G_{21}(s) & G_{22}(s) \end{bmatrix}$
- RH_∞ is used to denote the set of all linear, stable and time invariant systems, independent of in which form they are described.

3.2 The concept of the internal stability

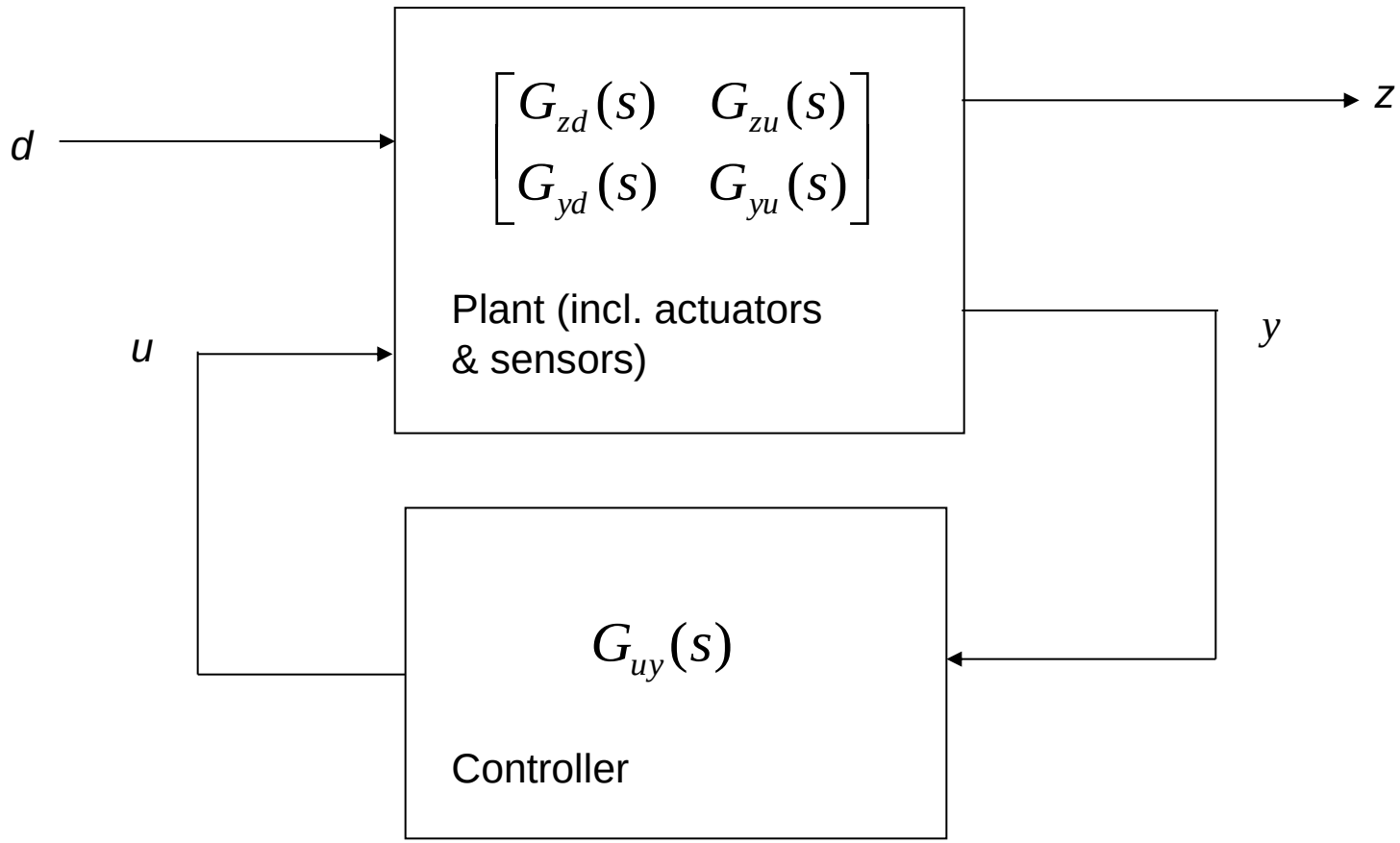

Definition:

Introducing two additional signals

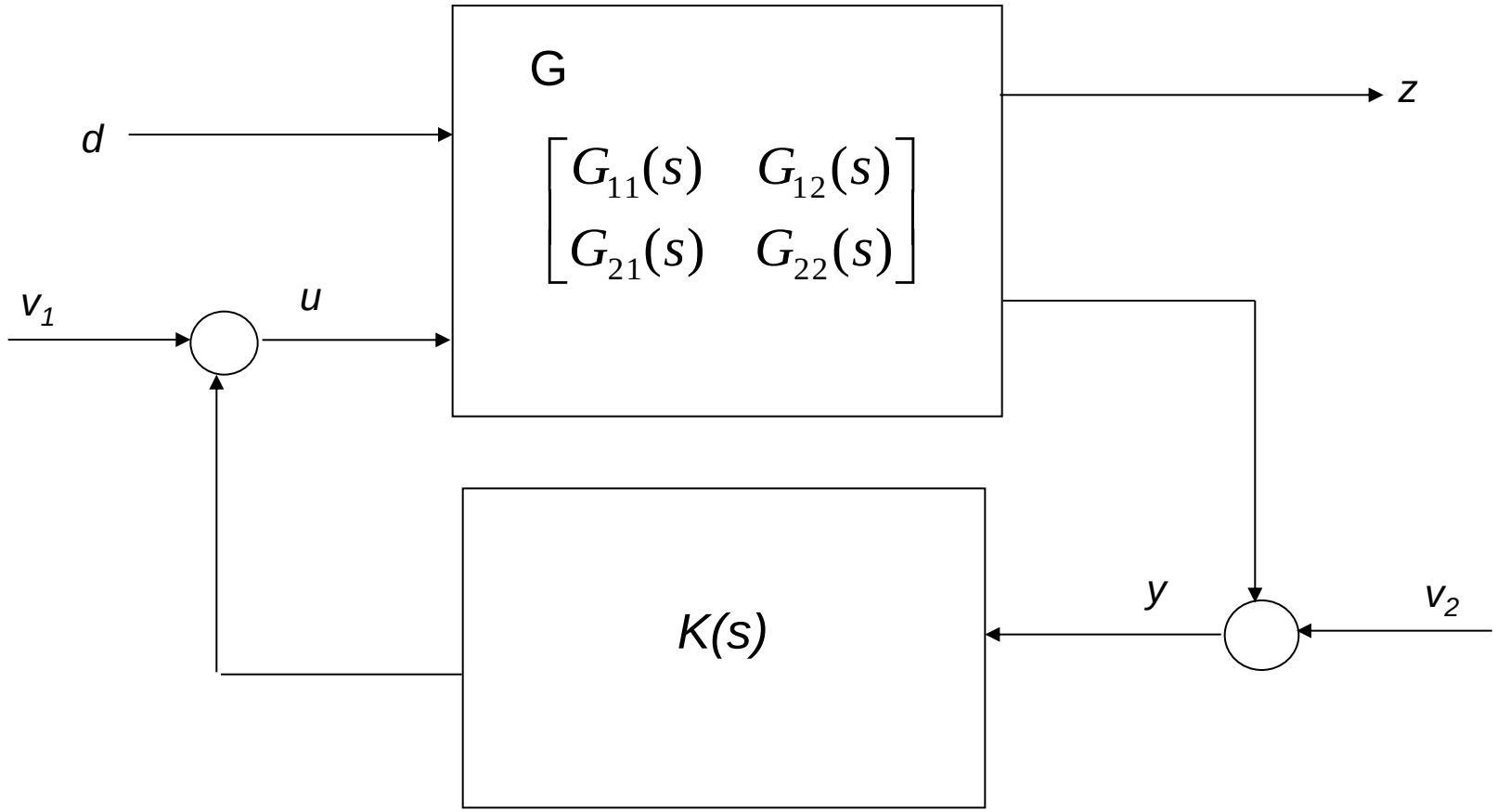

The feedback control system is called internally stable if the nine **transfer function matrices** from

$$d, v_1, v_2 \text{ to } z, u, y$$

are all stable.

The controller is said to be a stabilising controller (stabilizes the closed-loop) if the feedback system is internal stable. The expression in terms of transfer function:

$$\begin{bmatrix} I & -G_{12} & 0 \\ 0 & I & -K \\ 0 & -G_{22} & I \end{bmatrix} \begin{bmatrix} z \\ u \\ y \end{bmatrix} = \begin{bmatrix} G_{11} & 0 & 0 \\ 0 & I & 0 \\ G_{21} & 0 & I \end{bmatrix} \begin{bmatrix} d \\ v_1 \\ v_2 \end{bmatrix} \Rightarrow$$

$$\begin{bmatrix} z \\ u \\ y \end{bmatrix} = \begin{bmatrix} I & -G_{12} & 0 \\ 0 & I & -K \\ 0 & -G_{22} & I \end{bmatrix}^{-1} \begin{bmatrix} G_{11} & 0 & 0 \\ 0 & I & 0 \\ G_{21} & 0 & I \end{bmatrix} \begin{bmatrix} d \\ v_1 \\ v_2 \end{bmatrix}$$

Stability is independent of the input signals.

The objective of the study in this section is to answer the question:

Under which condition can a controller *K(s)* ensure the stability of the feedback control loop? $\longrightarrow$

How to describe all controllers which ensure the stability of the feedback control system under consideration ?

Motivation: To find the optimal one from all these controllers

An interesting article/example:

Braatz, R.D., On Internal Stability and Unstable Pole-Zero Cancellations, IEEE Magazine Control Systems, Vol.32, No.5, pp.15-16, 2012.

Part 2: Control system configuration, parameterization, and tools

4. Factorization and system representations

4.1 Some useful preliminaries: factorization

Definition:

Two RH_∞ transfer function matrices *M(s), N(s)* are called right-coprime if there exist two transfer function matrices *X(s), Y(s)* in RH_∞ s.t.

$$Y(s)N(s)+X(s)M(s)=I \quad \text{(Bezout identity)}$$

Pay your attention:

- to the dimensions of the matrices: *M(s), N(s)* have the same column number
- to the conditions on the transfer function matrices: they all stable

Mathematical interpretation: $\begin{bmatrix} M(s) \\ N(s) \end{bmatrix}$ is left-invertible in RH_∞

$$Y(s)N(s)+X(s)M(s)=I \Leftrightarrow \begin{bmatrix} X(s) & Y(s) \end{bmatrix} \begin{bmatrix} M(s) \\ N(s) \end{bmatrix} = I$$

A similar (dual) definition:

Two RH_∞ transfer function matrices $\hat{M}(s), \hat{N}(s)$ are called left-coprime if there exist two transfer function matrices $\hat{Y}(s), \hat{X}(s)$ in RH_∞ s.t.

$$\hat{N}(s)\hat{Y}(s) + \hat{M}(s)\hat{X}(s) = I \quad \text{(Bezout identity)}$$

Mathematical interpretation: $\begin{bmatrix} \hat{M}(s) & \hat{N}(s) \end{bmatrix}$ is right-invertible in RH_∞

$$\hat{N}(s)\hat{Y}(s) + \hat{M}(s)\hat{X}(s) = I \quad \Leftrightarrow \begin{bmatrix} \hat{M}(s) & \hat{N}(s) \end{bmatrix} \begin{bmatrix} \hat{X}(s) \\ \hat{Y}(s) \end{bmatrix} = I$$

Right-coprime factorization: Given a proper real-rational matrix $G(s)$,

$$G(s) = N(s)M^{-1}(s), \qquad M(s), N(s) \in RH_\infty \; right-coprime$$

Left-coprime factorization: Given a proper real-rational matrix $G(s)$,

$$G(s) = \hat{M}^{-1}(s)\hat{N}(s), \qquad \hat{M}(s), \hat{N}(s) \in RH_\infty \; left-coprime$$

$$G(s) = N(s)M^{-1}(s) = \hat{M}^{-1}(s)\hat{N}(s) \Rightarrow \begin{bmatrix} \hat{M}(s) & -\hat{N}(s) \end{bmatrix} \begin{bmatrix} N(s) \\ M(s) \end{bmatrix} = 0$$

Remarks:

- For SISO systems, LCF=RCF
- $(\mathrm{M},\mathrm{N}),(\hat{\mathrm{M}},\hat{\mathrm{N}})$ are (respectively) coprime, if they have no common unstable zeros.
- The transfer matrices

$$\hat{Y}(s),\hat{X}(s),Y(s),X(s)\in RH_{\infty}$$

are stable transfer functions, and have the same dimensions like the system under consideration, as the formulas given in Section 4.2 are applied for their computation.

Doubly-coprime factorization

For each proper real-rational matrix $G(s)$, there exist eight RH_∞ -matrices $M, N, X, Y, \hat{M}, \hat{N}, \hat{X}, \hat{Y}$ satisfying the equations

$$G(s) = N(s)M^{-1}(s) = \hat{M}^{-1}(s)\hat{N}(s)$$

$$\begin{bmatrix} X(s) & Y(s) \\ -\hat{N}(s) & \hat{M}(s) \end{bmatrix} \begin{bmatrix} M(s) & -\hat{Y}(s) \\ N(s) & \hat{X}(s) \end{bmatrix} = I \quad \Leftrightarrow$$

$$\begin{bmatrix} M(s) & -\hat{Y}(s) \\ N(s) & \hat{X}(s) \end{bmatrix} \begin{bmatrix} X(s) & Y(s) \\ -\hat{N}(s) & \hat{M}(s) \end{bmatrix} = I$$

Attention: G(s) is not necessarily stable.

Remark: There are different (but equivalent) forms of Bezout identity.

4.2 Factorization based system representations

Formulas for the computation of the eight matrices

$$G(s) = (A, B, C, D), \quad (A, B)\ stabilizable, \quad (C, A)\ detectable.$$

$$\exists F\ such\ that\ A + BF\ is\ stable; \quad \exists\, L,\ such\ that\ A - LC\ is\ stable.\ Then:$$

$$M(s) = (A + BF,\ B,\ F,\ I)$$

$$N(s) = (A + BF,\ B,\ C + DF,\ D)$$

$$X(s) = (A - LC,\ -(B - LD),\ F,\ I)$$

$$Y(s) = (A - LC,\ -L,\ F,\ O)$$

$$\hat{M}(s) = (A - LC,\ -L,\ C,\ I)$$

$$\hat{N}(s) = (A - LC,\ B - LD,\ C,\ D)$$

$$\hat{X}(s) = (A + BF,\ L,\ C + DF,\ I)$$

$$\hat{Y}(s) = (A + BF,\ -L,\ F,\ O)$$

The right coprime factorization – a state feedback interpretation

$$y = Gu \Rightarrow \begin{cases} \dot{x} = Ax + Bu \\ y = Cx + Du \end{cases} \xrightarrow{u := Fx + v} \begin{cases} \dot{x} = Ax + B(v + Fx) = (A + BF)x + Bv \\ u = Fx + v \\ y = Cx + D(v + Fx) = (C + DF)x + Dv \end{cases}$$

$$\Rightarrow \begin{cases} u = Mv, & M = (A + BF, B, F, I) \\ y = Nv, & N = (A + BF, B, C + DF, D) \end{cases} \Rightarrow y = Nv = NM^{-1}u$$

The left co-prime factorization – an observer-based residual generation interpretation

$$y = Gu \Rightarrow \begin{cases} \dot{x} = Ax + Bu \\ y = Cx + Du \end{cases}$$

$$\text{Observer} \begin{cases} \dot{\hat{x}} = A\hat{x} + Bu + L(y - \hat{y}) \\ \hat{y} = C\hat{x} + Du \end{cases}$$

$$\text{residual generator} \begin{cases} \dot{\hat{x}} = A\hat{x} + Bu + L(y - C\hat{x} - Du) \\ r = y - \hat{y} \end{cases} \Rightarrow$$

$$\hat{M}(s)y - \hat{N}(s)u(s) = y - \hat{y} = r(s) : \begin{cases} \dot{e} = (A - LC)e, e = x - \hat{x} \\ r = y - \hat{y} = Ce \end{cases}$$

$$\Rightarrow r \equiv 0 \text{ for } \hat{x}(0) = x(0) \Rightarrow y = \hat{M}^{-1}\hat{N}y = Gu$$

Stable image representation (SIR):

$$y = Gu \Rightarrow \begin{bmatrix} y(s) \\ u(s) \end{bmatrix} = \begin{bmatrix} N(s) \\ M(s) \end{bmatrix} v$$

Tracking dynamics
used for feed forward controller
parameterization and design

Dynamics of the actuator
used for actuator "monitoring"

Stable kernel representation (SKR):

$$y = Gu \Rightarrow \hat{M}(s)y - \hat{N}(s)u(s) = \begin{bmatrix} \hat{M}(s) & -\hat{N}(s) \end{bmatrix} \begin{bmatrix} y \\ u \end{bmatrix}$$

Creating (providing) the knowledge of the unknown variables (disturbances) in the process: the core and spirit of feedback control!

$$\begin{bmatrix} \hat{M}(s) & -\hat{N}(s) \end{bmatrix} \begin{bmatrix} N(s) \\ M(s) \end{bmatrix} = 0 \Rightarrow$$ SIR and SKR are orthogonal!

On SIR

Let R(s) be a stable and invertible (also in sense of stable) pre-filter (feed forward controller)

$$\begin{bmatrix} y(s) \\ u(s) \end{bmatrix} = \begin{bmatrix} N(s) \\ M(s) \end{bmatrix} R(s)v$$

is also an SIR, and it holds

$$N(s)R(s)\big(M(s)R(s)\big)^{-1} = N(s)M^{-1}(s) = G(s)$$

Any change in the state feedback gain matrix F can be expressed as a pre-filter

Check:

$$M_i = (A + BF_i, B, F_i, I), N_i = (A + BF_i, B, C + DF_i, D), i = 1, 2$$

$$M_2(s) = M_1(s)Q_{21}(s), N_2(s) = N_1(s)Q_{21}(s)$$

$$Q_{21}(s) = \big(A + BF_2, B, F_2 - F_1, I\big), Q_{12}(s) = Q_{21}^{-1}(s) \in RH_\infty$$

On SKR

Let R(s) be a stable and invertible post-filter

$$r = R\left(\hat{M}y - \hat{N}u\right)$$

is also an SKR, and it holds

$$\left(R(s)\hat{M}(s)\right)^{-1} R(s)\hat{N}(s) = \hat{M}^{-1}(s)\hat{N}(s) = G(s)$$

Any change in the observer gain matrix L can be expressed as a post-filter

Please provide the results.

Check:

$$\begin{bmatrix} N_2(s) \\ M_2(s) \end{bmatrix} = \begin{bmatrix} N_1(s) \\ M_1(s) \end{bmatrix} Q_{21}(s)$$

$$\begin{bmatrix} X_2(s) & Y_2(s) \end{bmatrix} \begin{bmatrix} N_2(s) \\ M_2(s) \end{bmatrix} = Q_{12}(s) \begin{bmatrix} X_1(s) & Y_1(s) \end{bmatrix} \begin{bmatrix} N_1(s) \\ M_1(s) \end{bmatrix} Q_{21}(s) = I$$

$$\begin{bmatrix} \hat{M}_2 & -\hat{N}_2 \end{bmatrix} = R_{21} \begin{bmatrix} \hat{M}_1 & -\hat{N}_1 \end{bmatrix}$$

$$\begin{bmatrix} \hat{M}_2 & -\hat{N}_2 \end{bmatrix} \begin{bmatrix} \hat{X}_2 \\ -\hat{Y}_2 \end{bmatrix} = R_{21} \begin{bmatrix} \hat{M}_1 & -\hat{N}_1 \end{bmatrix} \begin{bmatrix} \hat{X}_1 \\ -\hat{Y}_1 \end{bmatrix} R_{12} = I$$

Ref.: Theorem 13.7-13.8 in

S. X. Ding, Data-driven design of fault diagnosis and fault-tolerant control systems, Springer-Verlag, 2014

Interpretation

$$\hat{X}(s) = (A + BF, L, C + DF, I), \hat{Y}(s) = (A + BF, -L, F, O)$$

$$\begin{bmatrix} -\hat{N}(s) & \hat{M}(s) \end{bmatrix} \begin{bmatrix} -\hat{Y}(s) \\ \hat{X}(s) \end{bmatrix} = I \quad \Rightarrow \begin{bmatrix} -\hat{Y}(s) \\ \hat{X}(s) \end{bmatrix} r(s) = \begin{bmatrix} u(s) \\ y(s) \end{bmatrix}$$

$$\dot{\hat{x}} = (A + BF)\hat{x} + Lr, r = y - \hat{y} \Rightarrow y = r - \hat{y}$$

$$\begin{bmatrix} u \\ y \end{bmatrix} = \begin{bmatrix} F\hat{x} \\ r + (C + DF)\hat{x} \end{bmatrix} = \begin{bmatrix} F(sI - A - BF)^{-1} L \\ I + (C + DF)(sI - A - BF)^{-1} L \end{bmatrix} r(s)$$

Observer-based state feedback!

$\begin{bmatrix} -\hat{Y}(s) \\ \hat{X}(s) \end{bmatrix}$ is an SIR of an observer-based state feedback control system

driven by the residual signal!

Interpretation of

$$X(s)=(A-LC,-(B-LD),F,I),Y(s)=(A-LC,-L,F,O)$$

$$Y(s)N(s)+X(s)M(s)=I \Rightarrow \begin{bmatrix} X(s) & Y(s) \end{bmatrix}\begin{bmatrix} M(s) \\ N(s) \end{bmatrix} v = \begin{bmatrix} X(s) & Y(s) \end{bmatrix}\begin{bmatrix} u(s) \\ y(s) \end{bmatrix}$$

$$\begin{bmatrix} X(s) & Y(s) \end{bmatrix}\begin{bmatrix} u(s) \\ y(s) \end{bmatrix} = v(s) \Rightarrow \begin{aligned} \dot{\hat{x}} &= (A-LC)\hat{x}+(B-LD)u+Ly \\ v &= u-F\hat{x} \end{aligned}$$

$$\begin{bmatrix} X(s) & Y(s) \end{bmatrix}\begin{bmatrix} -\hat{Y}(s) \\ \hat{X}(s) \end{bmatrix} = 0$$

v is a residual vector (of the controller) if an observer-based state feedback controller is applied

It is an SKR of the controller.

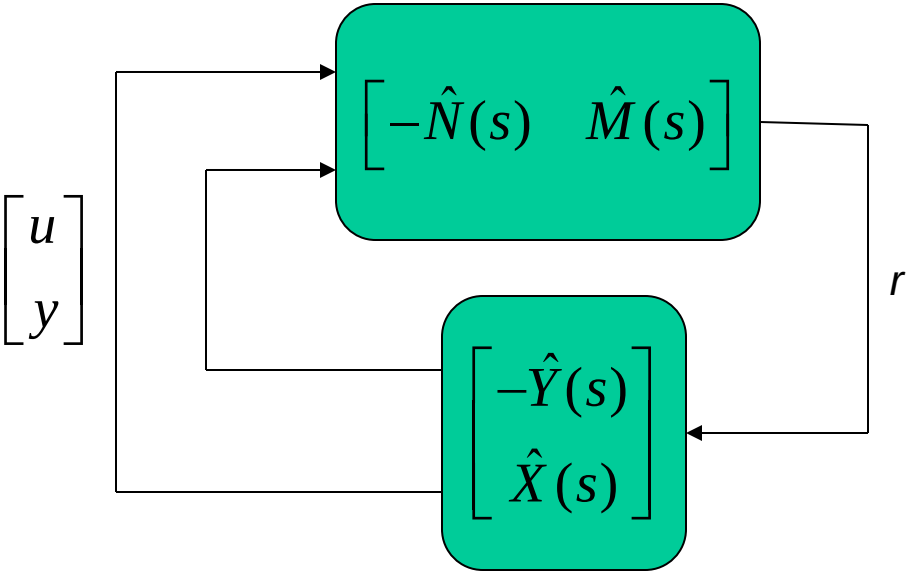

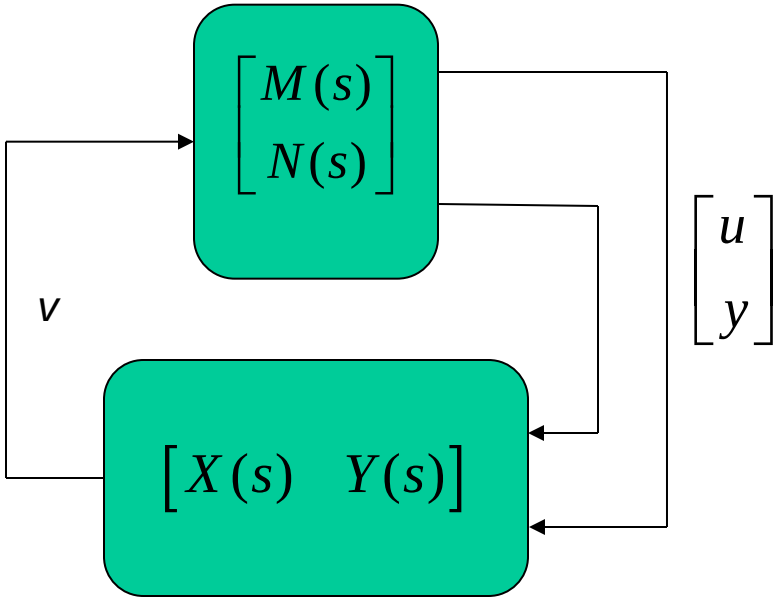

$$\begin{bmatrix} -\hat{N} & \hat{M} \end{bmatrix}\left(\begin{bmatrix} M \\ N \end{bmatrix} v + \begin{bmatrix} -\hat{Y} \\ \hat{X} \end{bmatrix} r\right)$$

$$= \begin{bmatrix} -\hat{N} & \hat{M} \end{bmatrix}\begin{bmatrix} -\hat{Y} \\ \hat{X} \end{bmatrix} r = r$$

$$\begin{bmatrix} X & Y \end{bmatrix}\left(\begin{bmatrix} M \\ N \end{bmatrix} v + \begin{bmatrix} -\hat{Y} \\ \hat{X} \end{bmatrix} r\right)$$

$$= \begin{bmatrix} X & Y \end{bmatrix}\begin{bmatrix} M \\ N \end{bmatrix} v = v$$

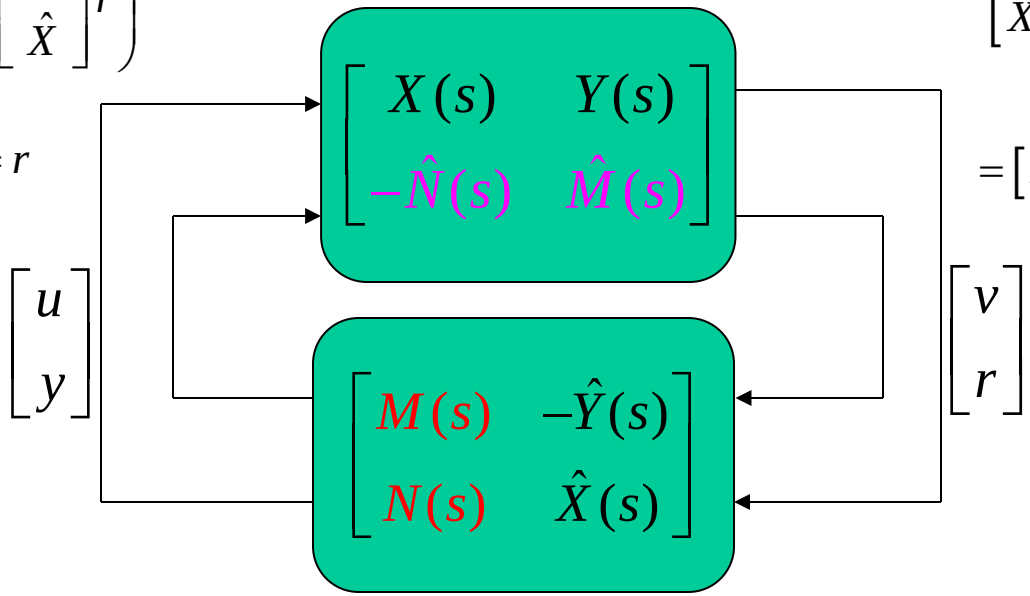

5 Parameterization of stabilization (feedback) controllers

Consider the control structure *

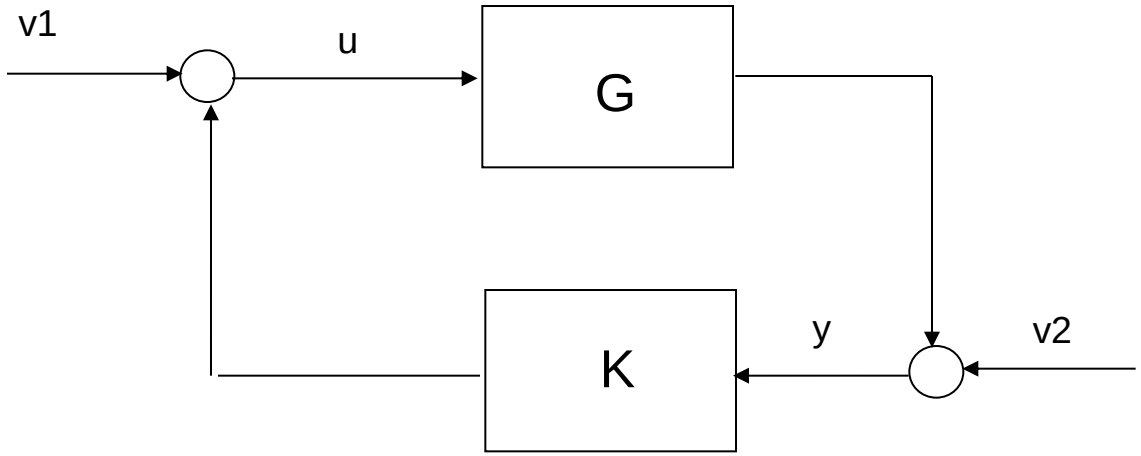

$$\begin{bmatrix} u \\ y \end{bmatrix} = \begin{bmatrix} v_1 + K(s)y \\ v_2 + G(s)u \end{bmatrix} \Rightarrow \begin{bmatrix} I & -K(s) \\ -G(s) & I \end{bmatrix} \begin{bmatrix} u \\ y \end{bmatrix} = \begin{bmatrix} v_1 \\ v_2 \end{bmatrix} \Leftrightarrow$$

$$\begin{bmatrix} u \\ y \end{bmatrix} = \begin{bmatrix} \left(I - K(s)G(s)\right)^{-1} & \left(I - K(s)G(s)\right)^{-1} K(s) \\ G(s)\left(I - K(s)G(s)\right)^{-1} & \left(I - G(s)K(s)\right)^{-1} \end{bmatrix} \begin{bmatrix} v_1 \\ v_2 \end{bmatrix} \quad **$$

The control loop is (internally) stable if all four transfer functions are stable.

5.1 An essential lemma

Lemma

Assume that a doubly coprime factorization of G is $G = NM^{-1} = \hat{M}^{-1}\hat{N}$, A right coprime factorization of K is $K = UV^{-1}$, a left coprime factorization of K is $K = \hat{V}^{-1}\hat{U}$. Then, the following statements are equivalent:

- K stabilizes G (in the sense of the sketched control structure)
- $$\begin{bmatrix} M & U \\ N & V \end{bmatrix}^{-1} \in RH_\infty$$
- $$\begin{bmatrix} \hat{V} & \hat{U} \\ \hat{N} & \hat{M} \end{bmatrix}^{-1} \in RH_\infty$$

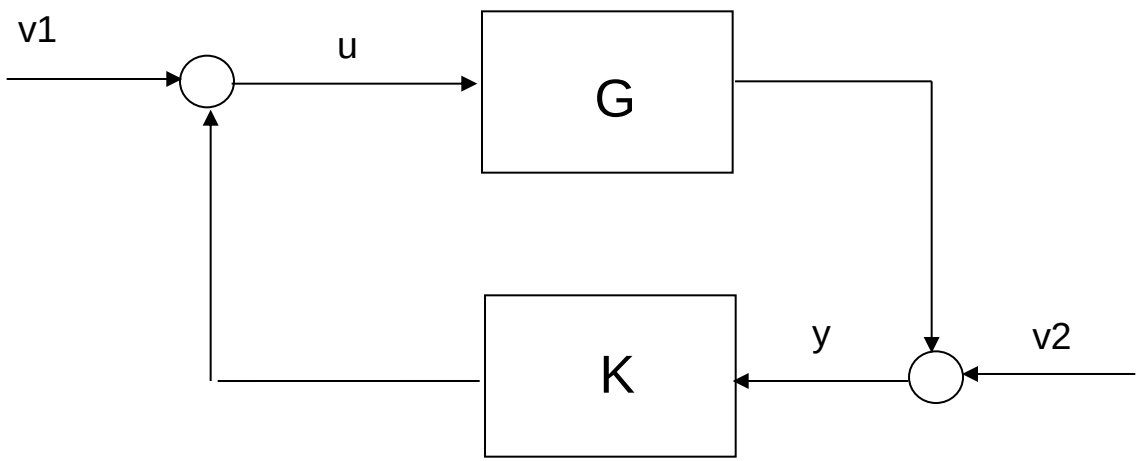

Proof: The task is to prove

$$\begin{bmatrix} u \\ y \end{bmatrix} = \begin{bmatrix} I & -K(s) \\ -G(s) & I \end{bmatrix}^{-1} \begin{bmatrix} v_1 \\ v_2 \end{bmatrix} \text{ is stable } \Leftrightarrow \begin{bmatrix} I & -K(s) \\ -G(s) & I \end{bmatrix}^{-1} \in RH_\infty$$

$$\Leftrightarrow \begin{bmatrix} \hat{V} & \hat{U} \\ \hat{N} & \hat{M} \end{bmatrix}^{-1} \in RH_\infty, \begin{bmatrix} M & U \\ N & V \end{bmatrix}^{-1} \in RH_\infty$$

$$\begin{bmatrix} \hat{V}^{-1} & 0 \\ 0 & -\hat{M}^{-1} \end{bmatrix} \begin{bmatrix} \hat{V} & \hat{U} \\ \hat{N} & \hat{M} \end{bmatrix} \begin{bmatrix} I & 0 \\ 0 & -I \end{bmatrix} = \begin{bmatrix} I & \hat{V}^{-1}\hat{U} \\ -\hat{M}^{-1}\hat{N} & -I \end{bmatrix} \begin{bmatrix} I & 0 \\ 0 & -I \end{bmatrix} = \begin{bmatrix} I & -K(s) \\ -G(s) & I \end{bmatrix}$$

A check with the aid of Bezout-identity

$$\left(I-G(s)K(s)\right)^{-1}=\left(I-N(s)M^{-1}(s)U(s)V^{-1}(s)\right)^{-1}=V(s)\left(V(s)-N(s)M^{-1}(s)U(s)\right)^{-1}$$

$$=\left(I-\hat{M}^{-1}(s)\hat{N}(s)\hat{V}^{-1}(s)\hat{U}(s)\right)^{-1}=\left(\hat{M}(s)-\hat{N}(s)\hat{V}^{-1}(s)\hat{U}(s)\right)^{-1}\hat{M}(s)$$

$$K(s)\left(I-G(s)K(s)\right)^{-1}=U(s)\left(V(s)-N(s)M^{-1}(s)U(s)\right)^{-1}$$

$$=\hat{V}^{-1}(s)\hat{U}(s)\left(\hat{M}(s)-\hat{N}(s)\hat{V}^{-1}(s)\hat{U}(s)\right)^{-1}\hat{M}(s)$$

$$
\begin{aligned}
\left(I-G(s)K(s)\right)^{-1}G(s) &= \left(I-N(s)M^{-1}(s)U(s)V^{-1}(s)\right)^{-1}N(s)M^{-1}(s) \\
&= V(s)\left(V(s)-N(s)M^{-1}(s)U(s)\right)^{-1}N(s)M^{-1}(s) \\
&= \left(I-\hat{M}^{-1}(s)\hat{N}(s)\hat{V}^{-1}(s)\hat{U}(s)\right)^{-1}\hat{M}^{-1}(s)\hat{N}(s) \\
&= \left(\hat{M}(s)-\hat{N}(s)\hat{V}^{-1}(s)\hat{U}(s)\right)^{-1}\hat{N}(s) \\
\left(I-K(s)G(s)\right)^{-1} &= I+K(s)\left(I-G(s)K(s)\right)^{-1}G(s) \\
&= I+U(s)\left(V(s)-N(s)M^{-1}(s)U(s)\right)^{-1}N(s)M^{-1}(s) \\
&= I+\hat{V}^{-1}(s)\hat{U}(s)\left(\hat{M}(s)-\hat{N}(s)\hat{V}^{-1}(s)\hat{U}(s)\right)^{-1}\hat{N}(s)
\end{aligned}
$$

It follows from the relation

$$
\begin{bmatrix} A & D \\ C & B \end{bmatrix}^{-1} = \begin{bmatrix} A^{-1}+E\Delta^{-1}F & -E\Delta^{-1} \\ -\Delta^{-1}F & \Delta^{-1} \end{bmatrix}
$$

$$
\Delta = B - CA^{-1}D, E = A^{-1}D, F = CA^{-1}
$$

that

$$\begin{bmatrix} M & U \\ N & V \end{bmatrix}^{-1} \in RH_\infty \Leftrightarrow \begin{bmatrix} M^{-1} + M^{-1}U\left(V - NM^{-1}U\right)^{-1} NM^{-1} & -M^{-1}U\left(V - NM^{-1}U\right)^{-1} \\ -\left(V - NM^{-1}U\right)^{-1} NM^{-1} & \left(V - NM^{-1}U\right)^{-1} \end{bmatrix} \in RH_\infty$$

$$\begin{bmatrix} \hat{V} & \hat{U} \\ \hat{N} & \hat{M} \end{bmatrix}^{-1} \in RH_\infty \Leftrightarrow \begin{bmatrix} \hat{V}^{-1} + \hat{V}^{-1}\hat{U}\left(\hat{M} - \hat{N}\hat{V}^{-1}\hat{U}\right)^{-1} \hat{N}\hat{V}^{-1} & -\hat{V}^{-1}\hat{U}\left(\hat{M} - \hat{N}\hat{V}^{-1}\hat{U}\right)^{-1} \\ -\left(\hat{M} - \hat{N}\hat{V}^{-1}\hat{U}\right)^{-1} \hat{N}\hat{V}^{-1} & \left(\hat{M} - \hat{N}\hat{V}^{-1}\hat{U}\right)^{-1} \end{bmatrix} \in RH_\infty$$

It becomes clear that

$$\begin{bmatrix} M & U \\ N & V \end{bmatrix}^{-1} \in RH_\infty \Rightarrow \begin{bmatrix} \left(I - K(s)G(s)\right)^{-1} & K(s)\left(I - G(s)K(s)\right)^{-1} \\ \left(I - G(s)K(s)\right)^{-1} G(s) & \left(I - G(s)K(s)\right)^{-1} \end{bmatrix} \in RH_\infty$$

$$\begin{bmatrix} \hat{V} & \hat{U} \\ \hat{N} & \hat{M} \end{bmatrix}^{-1} \in RH_\infty \Rightarrow \begin{bmatrix} \left(I - K(s)G(s)\right)^{-1} & K(s)\left(I - G(s)K(s)\right)^{-1} \\ \left(I - G(s)K(s)\right)^{-1} G(s) & \left(I - G(s)K(s)\right)^{-1} \end{bmatrix} \in RH_\infty$$

Alternative checks with different interpretations:

I: Using LCFs

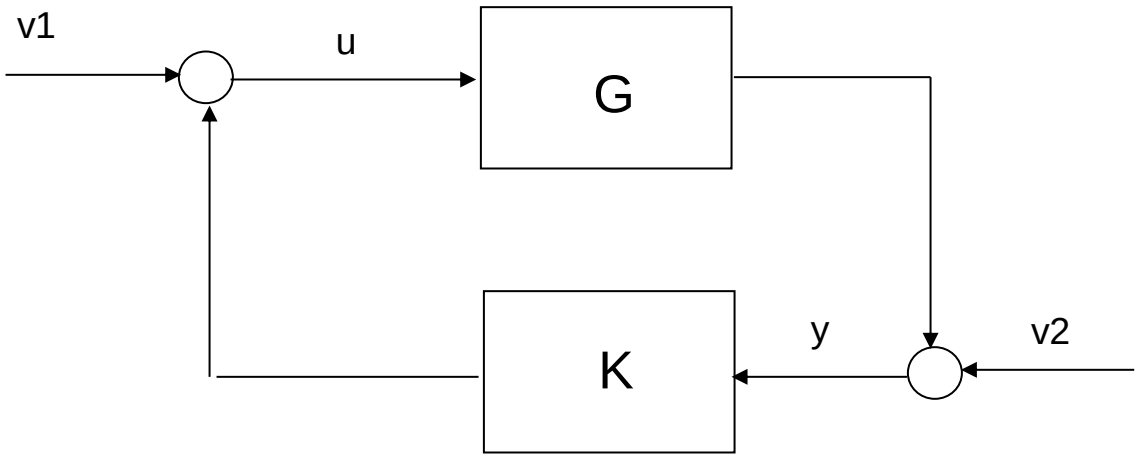

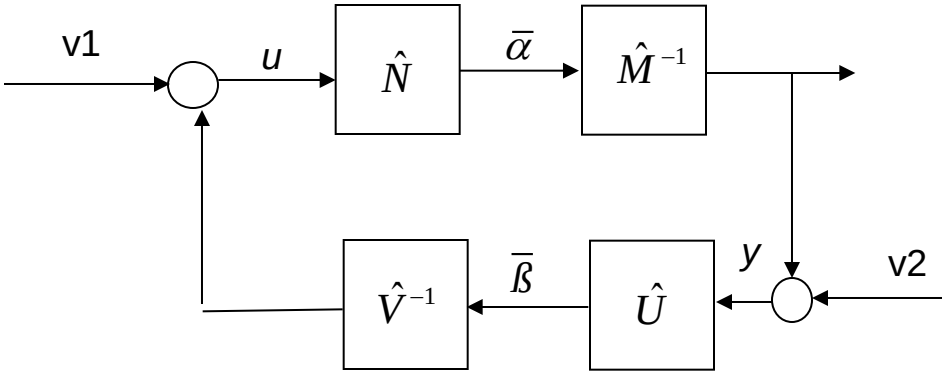

Since

$$\bar{\alpha} = \hat{N}u, \hat{M}^{-1}\bar{\alpha} + v_2 = y \Leftrightarrow \hat{N}u = \hat{M}y - \hat{M}v_2 \Leftrightarrow \hat{M}y - \hat{N}u = \hat{M}v_2$$

$$\hat{\beta} = \hat{U}y, \hat{V}^{-1}\hat{\beta} + v_1 = u \Leftrightarrow \hat{U}y = \hat{V}u - \hat{V}v_1 \Leftrightarrow \hat{V}u - \hat{U}y = \hat{V}v_1$$

we have

$$\begin{bmatrix} \hat{V} & -\hat{U} \\ -\hat{N} & \hat{M} \end{bmatrix} \begin{bmatrix} u \\ y \end{bmatrix} = \begin{bmatrix} \hat{V}v_1 \\ \hat{M}v_2 \end{bmatrix}$$

Considering

$$\begin{bmatrix} I & 0 \\ 0 & -I \end{bmatrix} \begin{bmatrix} \hat{V} & -\hat{U} \\ -\hat{N} & \hat{M} \end{bmatrix} \begin{bmatrix} I & 0 \\ 0 & -I \end{bmatrix} = \begin{bmatrix} \hat{V} & \hat{U} \\ \hat{N} & \hat{M} \end{bmatrix}$$

we can conclude

K stabilizes G iff $\begin{bmatrix} \hat{V} & \hat{U} \\ \hat{N} & \hat{M} \end{bmatrix}^{-1} \in RH_\infty$

II: Using RCF

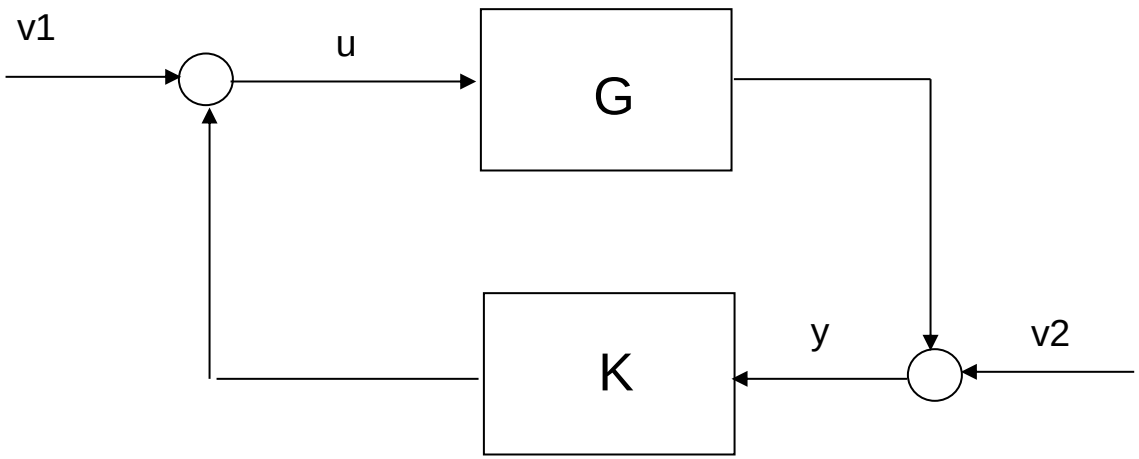

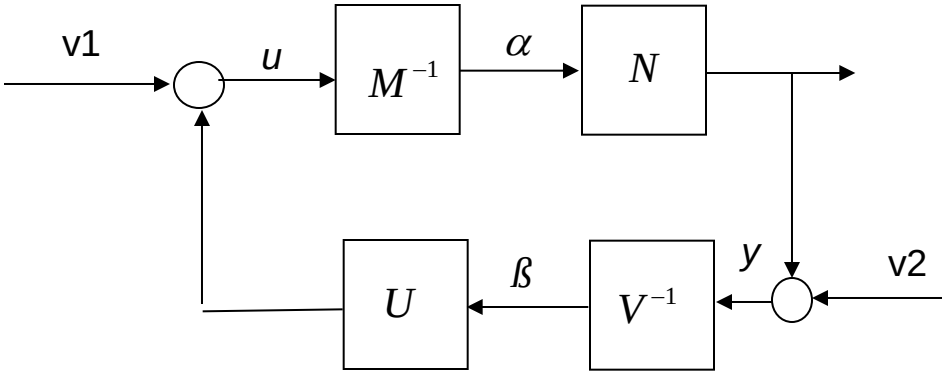

Since

$$\alpha = M^{-1}u \Leftrightarrow u = M\alpha, \beta = V^{-1}y \Leftrightarrow y = V\beta$$

$$N\alpha = y - v_2, U\beta = u - v_1$$

we have:

if the closed-loop system is (internally) stable,

$$\begin{bmatrix} M & -U \\ -N & V \end{bmatrix}\begin{bmatrix} \alpha \\ \beta \end{bmatrix} = \begin{bmatrix} v_1 \\ v_2 \end{bmatrix} \Rightarrow \begin{bmatrix} \alpha \\ \beta \end{bmatrix} = \begin{bmatrix} M & -U \\ -N & V \end{bmatrix}^{-1}\begin{bmatrix} v_1 \\ v_2 \end{bmatrix} \text{ is stable}$$

$$\begin{bmatrix} I & 0 \\ 0 & -I \end{bmatrix}\begin{bmatrix} M & -U \\ -N & V \end{bmatrix}\begin{bmatrix} I & 0 \\ 0 & -I \end{bmatrix} = \begin{bmatrix} M & U \\ N & V \end{bmatrix} \Rightarrow \begin{bmatrix} M & U \\ N & V \end{bmatrix}^{-1} \in RH_\infty$$

$$\text{i.e. } \begin{bmatrix} \left(I - K(s)G(s)\right)^{-1} & K(s)\left(I - G(s)K(s)\right)^{-1} \\ \left(I - G(s)K(s)\right)^{-1}G(s) & \left(I - G(s)K(s)\right)^{-1} \end{bmatrix} \in RH_\infty \Rightarrow \begin{bmatrix} M & U \\ N & V \end{bmatrix}^{-1} \in RH_\infty$$

5.2 Youla parametrization (in the simple system configuration)

Theorem (Parameterisation of all stabilizing controllers)

Given G. Assume that a doubly coprime factorization of G is

$$G(s) = N(s)M^{-1}(s) = \hat{M}^{-1}(s)\hat{N}(s)$$

$$\begin{bmatrix} X(s) & Y(s) \\ -\hat{N}(s) & \hat{M}(s) \end{bmatrix} \begin{bmatrix} M(s) & -\hat{Y}(s) \\ N(s) & \hat{X}(s) \end{bmatrix} = I$$

The set of all proper real-rational K's that stabilize G is parameterised by

$$\begin{aligned} K &= -(\hat{Y} + MQ)(\hat{X} - NQ)^{-1} \\ &= -(X - Q\hat{N})^{-1}(Y + Q\hat{M}), \qquad Q \in RH_\infty \end{aligned}$$

Remark: K itself can be unstable!

Understand the control laws

First, Q=0

$$K = -(\hat{Y} + MQ)(\hat{X} - NQ)^{-1} \Rightarrow u = -\hat{Y}\hat{X}^{-1}y$$

$$\dot{\hat{x}} = (A + BF)\hat{x} + Lr, r = y - \hat{y} \Rightarrow y = r - \hat{y}$$

$$\begin{bmatrix} u \\ y \end{bmatrix} = \begin{bmatrix} F\hat{x} \\ r + (C + DF)\hat{x} \end{bmatrix} \Leftrightarrow \begin{bmatrix} -\hat{Y}(s) \\ \hat{X}(s) \end{bmatrix} r(s) = \begin{bmatrix} u(s) \\ y(s) \end{bmatrix}$$

$$u = -\hat{Y}\hat{X}^{-1}y = -\hat{Y}r \Rightarrow u = F\hat{x}$$

Residual vector, $r = y - \hat{y}$, contains all information about disturbances, faults and uncertainty

Thus,

$$y = \hat{X}r$$

describes the disturbing/faulty/uncertain behavior (dynamics).

Understand the control laws (cont'd):

$$Q \neq 0, \in RH_\infty$$

$$u = Ky = -(\hat{Y} + MQ)(\hat{X} - NQ)^{-1} y \Rightarrow \begin{bmatrix} u \\ y \end{bmatrix} = \begin{bmatrix} -(\hat{Y} + MQ) \\ \hat{X} - NQ \end{bmatrix} ?$$

$$r = \begin{bmatrix} -\hat{N} & \hat{M} \end{bmatrix} \begin{bmatrix} u \\ y \end{bmatrix} = \begin{bmatrix} -\hat{N} & \hat{M} \end{bmatrix} \begin{bmatrix} -(\hat{Y} + MQ) \\ \hat{X} - NQ \end{bmatrix} = I\,? \Rightarrow ? = r$$

$$\begin{bmatrix} -\hat{N} & \hat{M} \end{bmatrix} \begin{bmatrix} -(\hat{Y} + MQ) \\ \hat{X} - NQ \end{bmatrix} = I$$

Understand the control laws (cont'd):

$$-(\hat{Y}+MQ)r=?$$

$$u=F\hat{x}-Qr$$

$$\dot{\hat{x}}=A\hat{x}+Bu+Lr=A\hat{x}+B(F\hat{x}-Qr)+Lr=\left(A+BF\right)\hat{x}-BQr+Lr$$

$$\Rightarrow u=F\hat{x}-Qr=-\left(\hat{Y}+MQ\right)r$$

$$\hat{Y}(s)=(A+BF,-L,F,O),M(s)=(A+BF,B,F,I)$$

$$y=\hat{y}+r=\left(C+DF\right)\hat{x}-DQr+r$$

$$\hat{X}=(A+BF,L,C+DF,I),N=(A+BF,B,C+DF,D)\Rightarrow$$

$$y=\left(\hat{X}-NQ\right)r$$

$$\begin{bmatrix}u\\y\end{bmatrix}=\begin{bmatrix}-(\hat{Y}+MQ)\\\hat{X}-NQ\end{bmatrix}r$$

Understand the control laws

$$K = -(X - Q\hat{N})^{-1}(Y + Q\hat{M}), \qquad Q \in RH_\infty$$

Proof: Let us see first the sufficiency.

To show this, note that

$$\begin{bmatrix} X(s) & Y(s) \\ -\hat{N}(s) & \hat{M}(s) \end{bmatrix} \begin{bmatrix} M(s) & -\hat{Y}(s) \\ N(s) & \hat{X}(s) \end{bmatrix} = I$$

Do a left and a right multiplication as

$$\begin{bmatrix} I & Q \\ O & I \end{bmatrix} \begin{bmatrix} X & Y \\ -\hat{N} & \hat{M} \end{bmatrix} \begin{bmatrix} M & -\hat{Y} \\ N & \hat{X} \end{bmatrix} \begin{bmatrix} I & -Q \\ O & I \end{bmatrix} = I$$

$$\Leftrightarrow \begin{bmatrix} X - Q\hat{N} & Y + Q\hat{M} \\ -\hat{N} & \hat{M} \end{bmatrix} \begin{bmatrix} M & -\hat{Y} - MQ \\ N & \hat{X} - NQ \end{bmatrix} = I$$

$$\Rightarrow (X - Q\hat{N})(\hat{Y} + MQ) - (Y + Q\hat{M})(\hat{X} - NQ) = 0$$

$$i.e. \quad (\hat{Y} + MQ)(\hat{X} - NQ)^{-1} = (X - Q\hat{N})^{-1}(Y + Q\hat{M})$$

Since $M, N, \hat{M}, \hat{N}, X, Y, \hat{X}, \hat{Y}, Q \in RH_\infty$, so

$$\hat{X} - NQ,\ Y + Q\hat{M},\ \hat{Y} + MQ,\ X - Q\hat{N} \in RH_\infty,$$

$$\begin{bmatrix} M & -(\hat{Y} + MQ) \\ N & \hat{X} - NQ \end{bmatrix}^{-1} = \begin{bmatrix} X - Q\hat{N} & Y + Q\hat{M} \\ -\hat{N} & \hat{M} \end{bmatrix} \in RH_\infty$$

and $\hat{X} - NQ,\ \hat{Y} + MQ$ are right coprime, $Y + Q\hat{M},\ X - Q\hat{N}$ are left coprime*. According to the Lemma, $K = -(\hat{Y} + MQ)(\hat{X} - NQ)^{-1}$ is a stabilizing controller.

To prove the necessity, assume that K is stabilizing and has a right coprime factorization $K = UV^{-1}$. From the Lemma, we know

$$\begin{bmatrix} M & U \\ N & V \end{bmatrix}^{-1} \in RH_\infty$$

Note that

$$\begin{bmatrix} X & Y \\ -\hat{N} & \hat{M} \end{bmatrix}\begin{bmatrix} M & U \\ N & V \end{bmatrix} = \begin{bmatrix} I & XU+YV \\ O & \hat{M}V-\hat{N}U \end{bmatrix} \qquad (1)$$

Because

$$\begin{bmatrix} X & Y \\ -\hat{N} & \hat{M} \end{bmatrix}^{-1}, \begin{bmatrix} M & U \\ N & V \end{bmatrix}^{-1} \in RH_\infty$$

so

$$\begin{bmatrix} I & XU+YV \\ O & \hat{M}V-\hat{N}U \end{bmatrix}^{-1} \in RH_\infty \quad \Rightarrow \quad (\hat{M}V-\hat{N}U)^{-1} \in RH_\infty$$

Left multiply (1) with $\begin{bmatrix} M & -\hat{Y} \\ N & \hat{X} \end{bmatrix}$, we get

$$\begin{bmatrix} M & U \\ N & V \end{bmatrix} = \begin{bmatrix} M & M(XU+YV)-\hat{Y}(\hat{M}V-\hat{N}U) \\ N & N(XU+YV)+\hat{X}(\hat{M}V-\hat{N}U) \end{bmatrix}$$

$$\Rightarrow \quad \begin{bmatrix} U \\ V \end{bmatrix} = \begin{bmatrix} M(XU+YV) - \hat{Y}(\hat{M}V - \hat{N}U) \\ N(XU+YV) + \hat{X}(\hat{M}V - \hat{N}U) \end{bmatrix}$$

Define

$$Q = -(XU+YV)(\hat{M}V - \hat{N}U)^{-1} \in RH_\infty$$

As a result,

$$\begin{bmatrix} U \\ V \end{bmatrix} = \begin{bmatrix} -(\hat{Y}+MQ)(\hat{M}V - \hat{N}U) \\ (\hat{X}-NQ)(\hat{M}V - \hat{N}U) \end{bmatrix}$$

$$\Rightarrow K = UV^{-1} = -(\hat{Y}+MQ)(\hat{X}-NQ)^{-1}$$

Check if $\left(I-G(s)K(s)\right)^{-1}, \left(I-K(s)G(s)\right)^{-1*}, \left(I-G(s)K(s)\right)^{-1}G(s),$

$$K(s)\left(I-G(s)K(s)\right)^{-1} \in RH_\infty$$

Check using the Bezout identity:

$$\left(I-GK\right)^{-1} = \left(I + NM^{-1}(\hat{Y}+MQ)(\hat{X}-NQ)^{-1}\right)^{-1}$$

Check using the Bezout identity:

$$\begin{aligned}
\left(I-GK\right)^{-1} &= \left(I+NM^{-1}(\hat{Y}+MQ)(\hat{X}-NQ)^{-1}\right)^{-1} \\
&= (\hat{X}-NQ)\left(\hat{X}-NQ+NM^{-1}\hat{Y}+NQ\right)^{-1} \\
&= (\hat{X}-NQ)\left(\hat{X}+\hat{M}^{-1}\hat{N}\hat{Y}\right)^{-1} = (\hat{X}-NQ)\left(\hat{X}+\hat{M}^{-1}(I-\hat{M}\hat{X})\right)^{-1} \\
&= (\hat{X}-NQ)\hat{M} \in RH_{\infty}
\end{aligned}$$

$$\left(I-GK\right)^{-1}G = (\hat{X}-NQ)\hat{M}\hat{M}^{-1}\hat{N} = (\hat{X}-NQ)\hat{N} \in RH_{\infty}$$

$$K\left(I-GK\right)^{-1} = (\hat{Y}+MQ)(\hat{X}-NQ)^{-1}(\hat{X}-NQ)\hat{M} = (\hat{Y}+MQ)\hat{M} \in RH_{\infty}$$

Theorem:

Given feedback control system

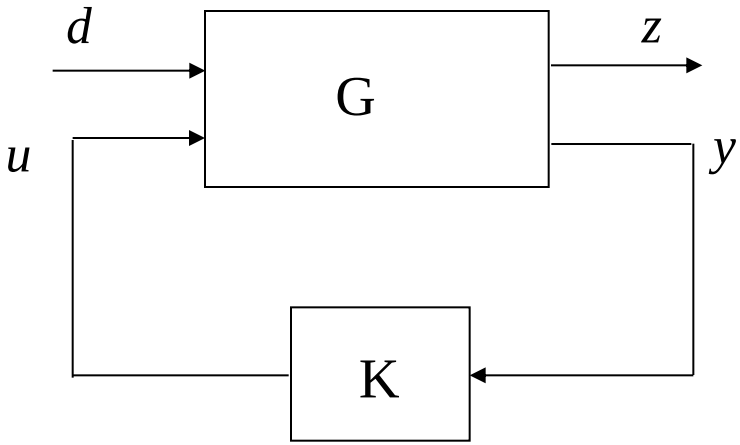

$$\begin{bmatrix} z \\ y \end{bmatrix} = \begin{bmatrix} G_{11} & G_{12} \\ G_{21} & G_{22} \end{bmatrix} \begin{bmatrix} d \\ u \end{bmatrix} = G \begin{bmatrix} d \\ u \end{bmatrix}$$

Then K stabilizes G if and only if K stabilizes G_{22}.

Reference: B.A. Francis, A Course in H_{inf} Control Theory, Springer, 1987

Let

$$G = \begin{bmatrix} G_{11} & G_{12} \\ G_{21} & G_{22} \end{bmatrix} = NM^{-1} = \tilde{M}^{-1}\tilde{N}$$

be the RCF and LCF of G

$$\begin{bmatrix} d \\ u \end{bmatrix} = M\alpha = \begin{bmatrix} M_1 \\ M_2 \end{bmatrix}\alpha \Rightarrow M^{-1}\begin{bmatrix} d \\ u \end{bmatrix} = \alpha \Rightarrow \begin{bmatrix} M_1^- & M_2^- \end{bmatrix}\begin{bmatrix} d \\ u \end{bmatrix} = \alpha$$

$$\begin{bmatrix} M_1 \\ M_2 \end{bmatrix}\begin{bmatrix} M_1^- & M_2^- \end{bmatrix} = \begin{bmatrix} I & 0 \\ 0 & I \end{bmatrix} \Rightarrow M_1 M_1^- = I$$

$$\begin{bmatrix} z \\ y \end{bmatrix} = \begin{bmatrix} N_1 \\ N_2 \end{bmatrix}\begin{bmatrix} M_1^- & M_2^- \end{bmatrix}\begin{bmatrix} d \\ u \end{bmatrix} = \begin{bmatrix} G_{11} & G_{12} \\ G_{21} & G_{22} \end{bmatrix}\begin{bmatrix} d \\ u \end{bmatrix}, G_{11} = N_1 M_1^-$$

Note that

$$z = \left(G_{11} + G_{12}K\left(I - G_{22}K\right)^{-1}G_{21}\right)d$$

K stabilizes G only if $M_1^- \in RH_\infty \Rightarrow M_1$ has stable right inverse

The analog result for the LCF also exists.

Understanding the result using the LCF/RCF based system configurations

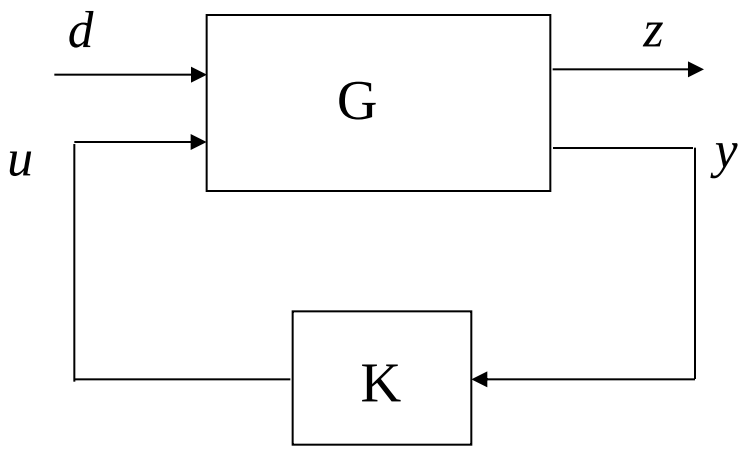

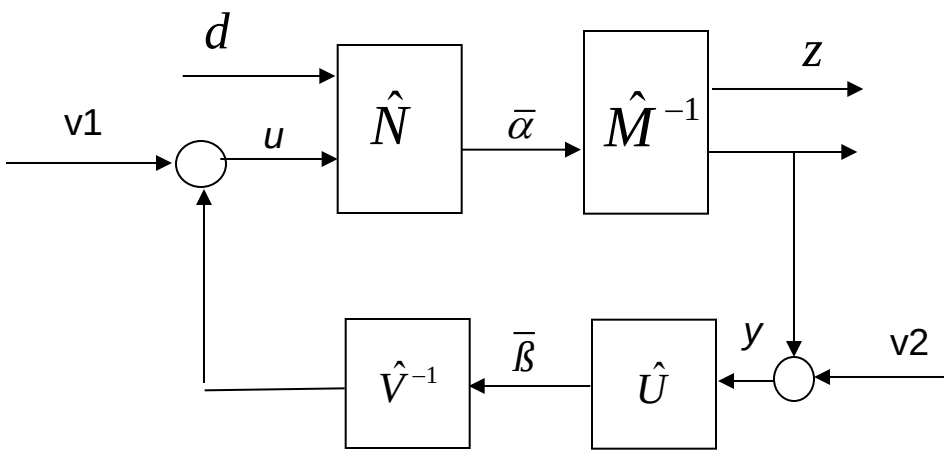

The closed-loop is stable if

$$\bar{\alpha}, \bar{\beta} \to u, y, z$$

are stable.

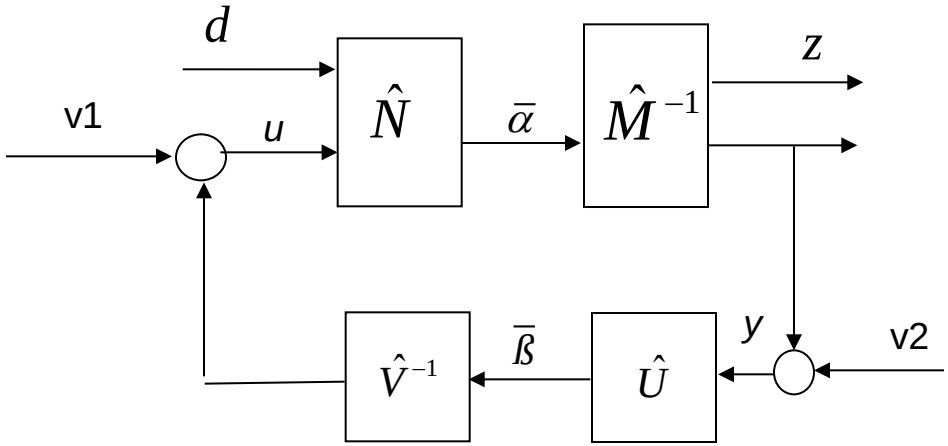

Check:

It is evident that

$v_1, v_2, d \to \bar{\alpha}, \bar{\beta}$ are stable

$\bar{\alpha}, \bar{\beta} \to u, y$ are stable, which has been proved in the earlier study.

It should be proved that $\bar{\alpha}, \bar{\beta} \to z$ is stable

Outline of the proof:

According to the definition of the internal stability, the stability of the nine transfer functions should be stable. To this end, first do the following reformulation:

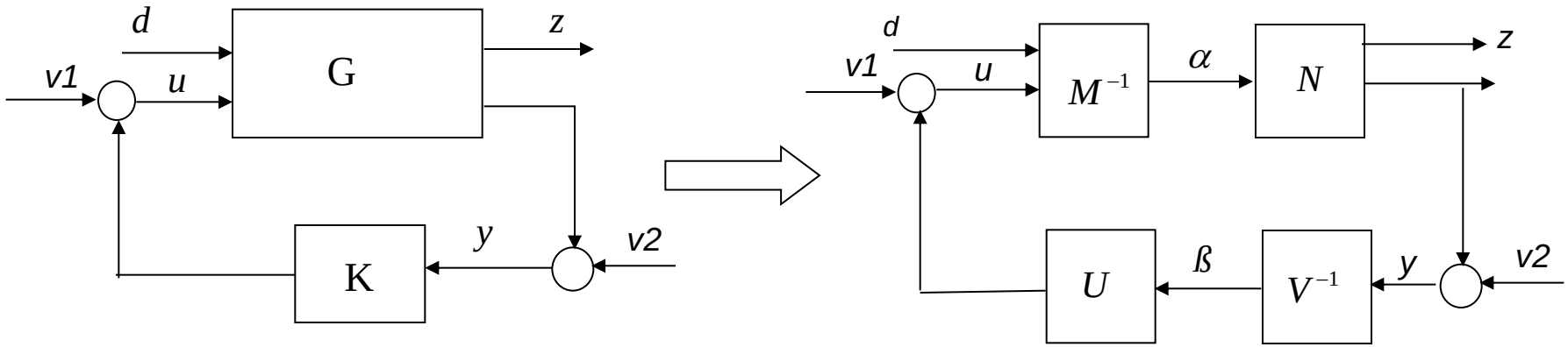

Note that the (direct) transfer functions from

$$\alpha, \beta \rightarrow z, y, u$$

are stable and moreover it has been proved that the transfer functions from *

$$v_1, v_2 \rightarrow \alpha, \beta$$

are stable. Thus, it remains to study the stability of the two tfs from

$$d \rightarrow \alpha, \beta$$

The basic idea:

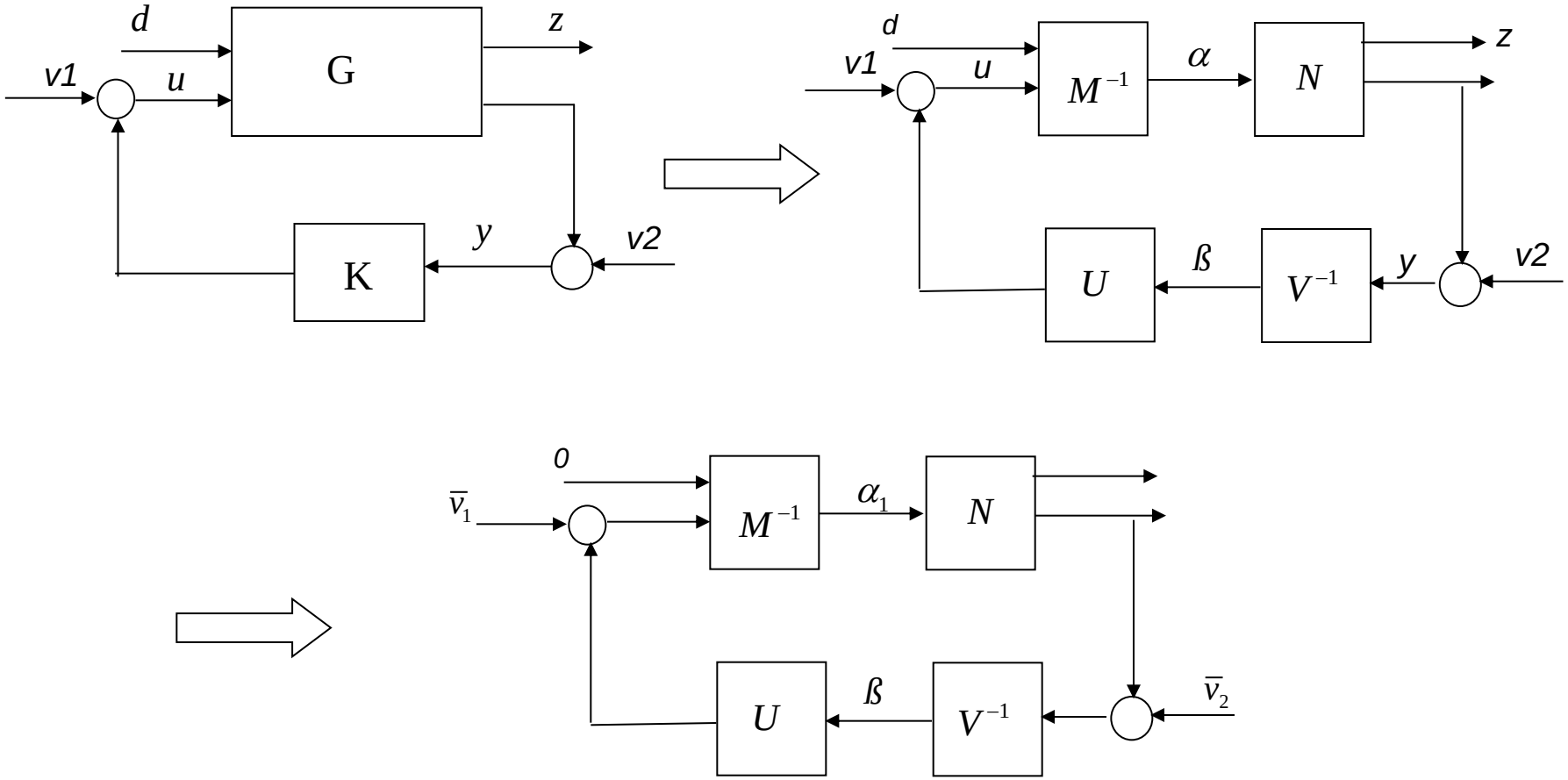

$$\begin{bmatrix} d \\ u \end{bmatrix} = M\alpha = \begin{bmatrix} M_1 \\ M_2 \end{bmatrix}\alpha \Rightarrow M^{-1}\begin{bmatrix} d \\ u \end{bmatrix} = \alpha \Rightarrow \begin{bmatrix} M_1^- & M_2^- \end{bmatrix}\begin{bmatrix} d \\ u \end{bmatrix} = \alpha$$

$$\begin{bmatrix} M_1 \\ M_2 \end{bmatrix}\begin{bmatrix} M_1^- & M_2^- \end{bmatrix} = \begin{bmatrix} I & 0 \\ 0 & I \end{bmatrix} \Rightarrow M_1 M_1^- = I$$

$$\begin{bmatrix} M_1^- & M_2^- \end{bmatrix}\begin{bmatrix} d \\ u \end{bmatrix} = M_1^- d + M_2^- u \Rightarrow M_2\left(M_1^- d + M_2^- u\right) = u + \underbrace{M_2 M_1^-}_{-\bar{v}_1} d$$

$$M_2\alpha = u + M_2 M_1^- d \Rightarrow M_2\left(\underbrace{\alpha - M_1^- d}_{\alpha_1}\right) = u$$

$$\begin{bmatrix} z \\ y \end{bmatrix} = \begin{bmatrix} N_1 \\ N_2 \end{bmatrix}\begin{bmatrix} M_1^- & M_2^- \end{bmatrix}\begin{bmatrix} d \\ u \end{bmatrix} \Rightarrow y = \underbrace{N_2 M_1^-}_{\bar{v}_2} d + N_2 M_2^- u$$

An important result:

K stabilizes G only if $M_1^- \in RH_\infty \Rightarrow M_1$ has stable right inverse

leads to the conclusion:

$$\left(M, \begin{bmatrix} 0 \\ I \end{bmatrix} \right) = \left(\begin{bmatrix} M_1 \\ M_2 \end{bmatrix}, \begin{bmatrix} 0 \\ I \end{bmatrix} \right)$$

is left-coprime.

Outline of proof:

Let

$$M_1 \begin{bmatrix} M_1^- & X \end{bmatrix} = \begin{bmatrix} I & 0 \end{bmatrix}, R := \begin{bmatrix} M_1^- & X \end{bmatrix} \in RH_\infty$$

Since

$$M_2 \begin{bmatrix} M_1^- & X \end{bmatrix} \in RH_\infty$$

setting

$$T = \begin{bmatrix} 0 & I \end{bmatrix} - M_2 \begin{bmatrix} M_1^- & X \end{bmatrix} \in \mathrm{RH}_\infty \text{ gives}$$

$$\exists \begin{bmatrix} R \\ T \end{bmatrix}, \text{ s.t. } \left(M, \begin{bmatrix} 0 \\ I \end{bmatrix} \right) \begin{bmatrix} R \\ T \end{bmatrix} = \begin{bmatrix} I & 0 \\ 0 & I \end{bmatrix}, \text{ i.e. LCF}$$

- set

$$v_1 = 0, v_2 = 0 \Rightarrow M\alpha = \begin{bmatrix} d \\ u \end{bmatrix} = \begin{bmatrix} I \\ 0 \end{bmatrix} d + \begin{bmatrix} 0 \\ I \end{bmatrix} U\beta, V\beta = \begin{bmatrix} 0 & I \end{bmatrix} N\alpha$$

- Since

$$\left(M, \begin{bmatrix} 0 \\ I \end{bmatrix} \right) = \left(\begin{bmatrix} M_1 \\ M_2 \end{bmatrix}, \begin{bmatrix} 0 \\ I \end{bmatrix} \right)$$

is left-coprime, there exist stable *T,R* s.t.

$$\begin{bmatrix} M & \begin{bmatrix} 0 \\ I \end{bmatrix} \end{bmatrix} \begin{bmatrix} R \\ T \end{bmatrix} = MR + \begin{bmatrix} 0 \\ I \end{bmatrix} T = I \Rightarrow \begin{bmatrix} I \\ 0 \end{bmatrix} d = \left(MR + \begin{bmatrix} 0 \\ I \end{bmatrix} T \right) \begin{bmatrix} I \\ 0 \end{bmatrix} d$$

- Introduce

$$\alpha_1 = \alpha - R \begin{bmatrix} I \\ 0 \end{bmatrix} d, \bar{v}_1 = T \begin{bmatrix} I \\ 0 \end{bmatrix} d \Rightarrow M\alpha_1 = \begin{bmatrix} 0 \\ I \end{bmatrix} \left(\bar{v}_1 + U\beta \right)$$

$$\bar{v}_2 = \begin{bmatrix} 0 & I \end{bmatrix} NR \begin{bmatrix} I \\ 0 \end{bmatrix} d \Rightarrow V\beta = \begin{bmatrix} 0 & I \end{bmatrix} N\alpha_1 + \bar{v}_2$$

• The system,

$$M\alpha_1 = \begin{bmatrix} 0 \\ I \end{bmatrix}\left(\bar{v}_1 + U\beta\right), V\beta = \begin{bmatrix} 0 & I \end{bmatrix} N\alpha_1 + \bar{v}_2$$

is equivalent to

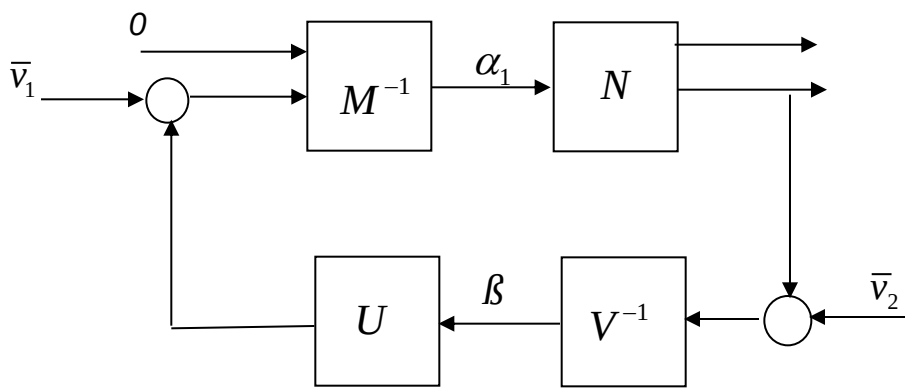

which is stable.

$$\text{Since } \bar{v}_1 = T\begin{bmatrix} I \\ 0 \end{bmatrix} d \to \alpha_1 \text{ is stable, } \alpha = \alpha_1 + \mathrm{R}\begin{bmatrix} I \\ 0 \end{bmatrix} d \Rightarrow d \to \alpha \text{ is stable}$$

$$\text{Similar, } \bar{v}_2 = \begin{bmatrix} 0 & I \end{bmatrix} NR\begin{bmatrix} I \\ 0 \end{bmatrix} d \to \beta \text{ is stable and } \alpha_1 \to \beta \text{ is stable}$$

$$\text{moreover } \beta = \begin{bmatrix} 0 & I \end{bmatrix} N\alpha_1 + \bar{v}_2 \Rightarrow d \to \beta \text{ is stable}$$

End

Closed-loop transfer function

Assume that a doubly coprime factorization of G_{22} is

$$G_{22} = N_2 M_2^{-1} = \hat{M}_2^{-1} \hat{N}_2$$

$$\begin{bmatrix} X_2 & Y_2 \\ -\hat{N}_2 & \hat{M}_2 \end{bmatrix} \begin{bmatrix} M_2 & -\hat{Y}_2 \\ N_2 & \hat{X}_2 \end{bmatrix} = I$$

According to the theorems, all controllers that stabilizes G can be written as

$$\begin{aligned} K &= -(\hat{Y}_2 + M_2 Q)(\hat{X}_2 - N_2 Q)^{-1} \\ &= -(X_2 - Q\hat{N}_2)^{-1}(Y_2 + Q\hat{M}_2), \qquad Q \in RH_\infty \end{aligned}$$

Now we derive the closed-loop transfer function from the disturbance (external input) d to controlled output z.

$$\begin{bmatrix} z \\ y \end{bmatrix} = \begin{bmatrix} G_{11} & G_{12} \\ G_{21} & G_{22} \end{bmatrix} \begin{bmatrix} d \\ u \end{bmatrix}, \quad u = Ky$$

$$\Rightarrow \quad u = Ky = K(G_{21}d + G_{22}u) = KG_{21}d + KG_{22}u$$

$$\Rightarrow u = (I - KG_{22})^{-1} KG_{21} d$$

$$\Rightarrow z = G_{11}d + G_{12}u = G_{11}d + G_{12}(I - KG_{22})^{-1} KG_{21} d$$

$$\Rightarrow G_{zd} = G_{11} + G_{12}(I - KG_{22})^{-1} KG_{21}$$

Further,

$$\begin{bmatrix} X_2 & Y_2 \\ -\hat{N}_2 & \hat{M}_2 \end{bmatrix} \begin{bmatrix} M_2 & -\hat{Y}_2 \\ N_2 & \hat{X}_2 \end{bmatrix} = I \;\Rightarrow\; \begin{cases} \hat{M}_2 N_2 = \hat{N}_2 M_2 \\ Y_2 N_2 = I - X_2 M_2 \end{cases}$$

$$I - KG_{22} = I + (X_2 - Q\hat{N}_2)^{-1}(Y_2 + Q\hat{M}_2) N_2 M_2^{-1}$$

$$= I + (X_2 - Q\hat{N}_2)^{-1}(Y_2 N_2 M_2^{-1} + Q\hat{M}_2 N_2 M_2^{-1})$$

$$= I + (X_2 - Q\hat{N}_2)^{-1}\left((I - X_2 M_2) M_2^{-1} + Q\hat{N}_2\right)$$

$$= (X_2 - Q\hat{N}_2)^{-1} M_2^{-1}$$

$$(I - KG_{22})^{-1}K = M_2(X_2 - Q\hat{N}_2)K = -M_2(Y_2 + Q\hat{M}_2)$$

$$\Rightarrow G_{zd} = G_{11} + G_{12}(I - KG_{22})^{-1}KG_{21}$$

$$= G_{11} - G_{12}M_2(Y_2 + Q\hat{M}_2)G_{21}$$

$$= G_{11} - G_{12}M_2Y_2G_{21} - G_{12}M_2Q\hat{M}_2G_{21}$$

Define $T_1 = G_{11} - G_{12}M_2Y_2G_{21}, \quad T_2 = G_{12}M_2, \quad T_3 = \hat{M}_2G_{21}$

Finally,

$$G_{zd} = T_1 - T_2QT_3$$

$T_1, T_2, T_3 \in RH_\infty$ (see the proof in the state space)

If there exists $Q \in RH_\infty$, such that

$$T_1 = T_2QT_3$$

Then $G_{zd} = 0$. This is called disturbance decoupling.

About the stability of the transfer matrices:

$$T_1 = G_{11} - G_{12} M_2 Y_2 G_{21}, \quad T_2 = G_{12} M_2, \quad T_3 = \hat{M}_2 G_{21}$$

Consider

$$G(s) = \left(A, \begin{bmatrix} B_1 & B_2 \end{bmatrix}, \begin{bmatrix} C_1 \\ C_2 \end{bmatrix}, \begin{bmatrix} D_{11} & D_{12} \\ D_{21} & D_{22} \end{bmatrix} \right),$$

$$M(s) = (A + BF, B, F, I) \qquad \hat{M}(s) = (A - LC, -L, C, I)$$

$$N(s) = (A + BF, B, C + DF, D) \qquad \hat{N}(s) = (A - LC, B - LD, C, D)$$

$$X(s) = (A - LC, -(B - LD), F, I) \qquad \hat{X}(s) = (A + BF, L, C + DF, I)$$

$$Y(s) = (A - LC, -L, F, O) \qquad \hat{Y}(s) = (A + BF, -L, F, O)$$

$$G_{11} = N_1 M_1^{-1}, G_{22} = \hat{M}_2^{-1} \hat{N}_2 = N_2 M_2^{-1}, G_{12} = N_{12} M_{12}^{-1}, G_{21} = N_{21} M_{21}^{-1} = \hat{M}_{21}^{-1} \hat{N}_{21}$$

It holds (please prove)

$$M_{12} = M_2, \hat{M}_{21} = \hat{M}_2, M_{21} = M_1 \Rightarrow$$

all three transfer matrices are stable.

State space computation of T_1, T_2, T_3

Assume that

$$G(s) = \left(A, \begin{bmatrix} B_1 & B_2 \end{bmatrix}, \begin{bmatrix} C_1 \\ C_2 \end{bmatrix}, \begin{bmatrix} D_{11} & D_{12} \\ D_{21} & D_{22} \end{bmatrix} \right)$$, (A,B_2) stabilizable, (C_2,A) detectable.

Recall that $M_2, \hat{M}_2, Y_2$ can be expressed by

$$M_2(s) = (A + B_2 F, B_2, F, I)$$
$$\hat{M}_2(s) = (A - LC_2, -L, C_2, I)$$
$$Y_2(s) = (A - LC_2, -L, F, O)$$

where matrices F and L ensure the stability of $A+B_2F$ and $A-LC_2$.

T_1, T_2, T_3 can be computed by

$$T_1 = G_{11} - G_{12} M_2 Y_2 G_{21}$$

$$= \left(\begin{bmatrix} A + B_2 F & -B_2 F \\ O & A - LC_2 \end{bmatrix}, \begin{bmatrix} B_1 \\ B_1 - LD_{21} \end{bmatrix}, \begin{bmatrix} C_1 + D_{12} F & -D_{12} F \end{bmatrix}, D_{11} \right)$$

$$= D_{11} + \begin{bmatrix} C_1 + D_{12} F & -D_{12} F \end{bmatrix} \begin{bmatrix} (sI - A - B_2 F)^{-1} & * \\ O & (sI - A + LC_2)^{-1} \end{bmatrix} \begin{bmatrix} B_1 \\ B_1 - LD_{21} \end{bmatrix}$$

$$= D_{11} + (C_1 + D_{12} F)(sI - A - B_2 F)^{-1} B_1 - D_{12} F (sI - A + LC_2)^{-1} (B_1 - LD_{21})$$

$$-(C_1 + D_{12} F)(sI - A - B_2 F)^{-1} B_2 F (sI - A + LC_2)^{-1} (B_1 - LD_{21})$$

$$* = -(sI - A - B_2 F)^{-1} B_2 F (sI - A + LC_2)^{-1}$$

$$T_2 = G_{12} M_2 = (A + B_2 F, B_2, C_1 + D_{12} F, D_{12})$$

$$T_3 = \hat{M}_2 G_{21} = (A - LC_2, B_1 - LD_{21}, C_2, D_{21})$$

Some useful relations according to the RCF/LFC

$$G_{22} = \hat{M}_2^{-1}\hat{N}_2 = N_2 M_2^{-1}, G_{12} = N_{12} M_2^{-1}, G_{21} = \hat{M}_2^{-1}\hat{N}_{21}$$

$$M_2 = \left(A + B_2 F, B_2, F, I\right), \hat{M}_2 = (A - LC_2, -L, C_2, I)$$

$$N_2 = \left(A + B_2 F, B_2, C_2 + D_{22} F, D_{22}\right), \hat{N}_2 = (A - LC_2, B_2 - LD_{22}, C_2, D_{22})$$

$$N_{12} = \left(A + B_2 F, B_2, C_1 + D_{12} F, D_{12}\right), \hat{N}_{21} = (A - LC_2, B_1 - LD_{21}, C_2, D_{21})$$

$$\hat{Y}_2 = (A + B_2 F, -L, F, O), Y = (A - LC, -L, F, O)$$

$$G_{12} = N_{12} M_2^{-1}, G_{21} = \hat{M}_2^{-1}\hat{N}_{21}$$

It becomes evident that

$$G_{12} M_2 = N_{12} = \left(A + B_2 F, B_2, C_1 + D_{12} F, D_{12}\right) \in RH_\infty$$

$$\hat{M}_2 G_{21} = \hat{N}_{21} = \left(A - LC_2, B_1 - LD_{21}, C_2, D_{21}\right) \in RH_\infty$$

Check $T_1 = G_{11} - G_{12} M_2 Y_2 G_{21} \in RH_\infty$

$$M_2 Y_2 = \hat{Y}_2 \hat{M}_2 \Rightarrow G_{12} M_2 Y_2 G_{21} = G_{12} \hat{Y}_2 \hat{N}_{21} \Rightarrow T_1 = G_{11} - G_{12} \hat{Y}_2 \hat{N}_{21}$$

$$G_{11} - G_{12} \hat{Y}_2 \hat{N}_{21} = D_{11} - D_{12} \hat{Y}_2 \hat{N}_{21} + C_1 \left(sI - A\right)^{-1} B_1 - C_1 \left(sI - A\right)^{-1} B_2 \hat{Y}_2 \hat{N}_{21}$$

$$\begin{aligned}
D_{12} \hat{Y}_2 \hat{N}_{21} &= -D_{12} F \left(sI - A - B_2 F\right)^{-1} L C_2 \left(sI - A + L C_2\right)^{-1} \left(B_1 - L D_{21}\right) \\
&\quad - D_{12} F \left(sI - A - B_2 F\right)^{-1} L D_{21} \\
&\quad D_{12} F \left(sI - A - B_2 F\right)^{-1} L C_2 \left(sI - A + L C_2\right)^{-1} \left(B_1 - L D_{21}\right) \\
&= D_{12} F \left(sI - A - B_2 F\right)^{-1} \left(I - \left(I + L C_2 \left(sI - A\right)^{-1} \right)^{-1} \right) \left(B_1 - L D_{21}\right) \Rightarrow
\end{aligned}$$

$$\begin{aligned}
D_{12} \hat{Y}_2 \hat{N}_{21} &= -D_{12} F \left(sI - A - B_2 F\right)^{-1} B_1 \\
&\quad + D_{12} F \left(sI - A - B_2 F\right)^{-1} \left(I + L C_2 \left(sI - A\right)^{-1} \right)^{-1} \left(B_1 - L D_{21}\right) \\
&= -D_{12} F \left(sI - A - B_2 F\right)^{-1} B_1 \\
&\quad + D_{12} F \left(sI - A - B_2 F\right)^{-1} \left(sI - A\right) \left(sI - A + L C_2\right)^{-1} \left(B_1 - L D_{21}\right) \\
&= -D_{12} F \left(sI - A - B_2 F\right)^{-1} B_1 + D_{12} F \left(sI - A + L C_2\right)^{-1} \left(B_1 - L D_{21}\right) \\
&\quad + D_{12} F \left(sI - A - B_2 F\right)^{-1} B_2 F \left(sI - A + L C_2\right)^{-1} \left(B_1 - L D_{21}\right)
\end{aligned}$$

$$C_1\left(sI-A\right)^{-1}B_1-C_1\left(sI-A\right)^{-1}B_2\hat{Y}_2\hat{N}_{21}:$$

$$-C_1\left(sI-A\right)^{-1}B_2(-1)F\left(sI-A-B_2F\right)^{-1}LC_2\left(sI-A+LC_2\right)^{-1}B_1$$

$$=C_1\left(sI-A\right)^{-1}\left(\left(I-B_2F\left(sI-A\right)^{-1}\right)^{-1}-I\right)\left(I-\left(I+LC_2\left(sI-A\right)^{-1}\right)^{-1}\right)B_1$$

$$=-C_1\left(sI-A\right)^{-1}B_1+C_1\left(sI-A\right)^{-1}\begin{pmatrix}\left(I-B_2F\left(sI-A\right)^{-1}\right)^{-1}+\left(I+LC_2\left(sI-A\right)^{-1}\right)^{-1}\\-\left(I-B_2F\left(sI-A\right)^{-1}\right)^{-1}\left(I+LC_2\left(sI-A\right)^{-1}\right)^{-1}\end{pmatrix}B_1$$

$$=-C_1\left(sI-A\right)^{-1}B_1+C_1\left(sI-A-B_2F\right)^{-1}B_1+C_1\left(sI-A+LC_2\right)^{-1}B_1$$

$$-C_1\left(sI-A-B_2F\right)^{-1}\left(sI-A\right)\left(sI-A+LC_2\right)^{-1}B_1$$

$$-C_1\left(sI-A\right)^{-1}B_2F\left(sI-A-B_2F\right)^{-1}L\left(D_{21}-C_2\left(sI-A+LC_2\right)^{-1}LD_{21}\right)$$

$$=-C_1\left(sI-A-B_2F\right)^{-1}B_2F\left(sI-A+LC_2\right)^{-1}LD_{21}\Rightarrow$$

$$C_1\left(sI-A\right)^{-1}B_1-C_1\left(sI-A\right)^{-1}B_2\hat{Y}_2\hat{N}_{21}$$

$$=-C_1\left(sI-A-B_2F\right)^{-1}B_2F\left(sI-A+LC_2\right)^{-1}\left(B_1-LD_{21}\right)+C_1\left(sI-A-B_2F\right)^{-1}B_1$$

As a result:

$$
\begin{aligned}
T_1 &= G_{11} - G_{12} M_2 Y_2 G_{21} \\
&= D_{11} + \left(C_1 + D_{12}F\right)\left(sI - A - B_2F\right)^{-1} B_1 - D_{12}F\left(sI - A - LC_2\right)^{-1}\left(B_1 - LD_{21}\right) \\
&\quad -\left(C_1 + D_{12}F\right)\left(sI - A - B_2F\right)^{-1} B_2F\left(sI - A - LC_2\right)^{-1}\left(B_1 - LD_{21}\right)
\end{aligned}
$$

In the above derivation, the following relations have been used:

$$
\left(sI - A - B_2F\right)^{-1}\left(sI - A\right) = \left(I - \left(sI - A\right)^{-1} B_2F\right)^{-1} = I + \left(sI - A + B_2F\right)^{-1} B_2F
$$

$$
\left(I + LC_2\left(sI - A\right)^{-1}\right)^{-1} = I - LC_2\left(sI - A + LC_2\right)^{-1}
$$

6. Variations of Youla parametrization

6.1 Internal model control scheme

Given the below control structure and suppose that *G* is stable.

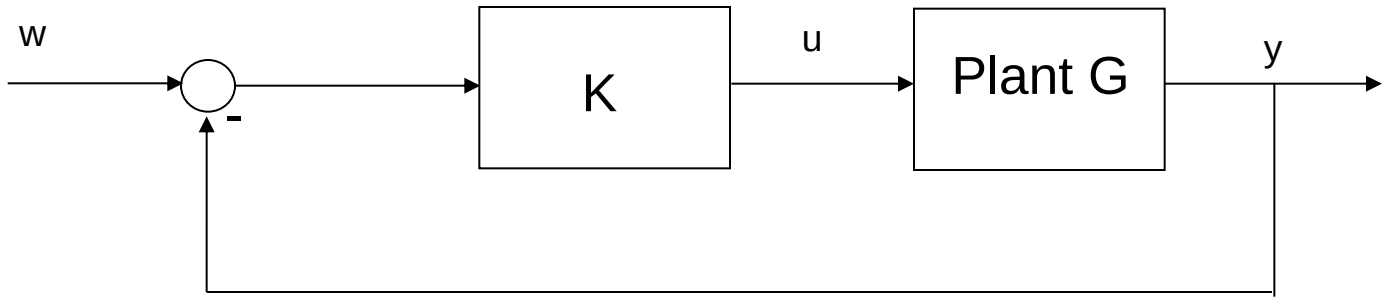

Then

$$G(s) = N(s) = \hat{N}(s), M(s) = I, \hat{M}(s) = I$$

builds right/left coprime factorisation. The stabilising controllers can be parameterised as follows:

$$K(s) = (I - QG)^{-1}Q = Q(I - GQ)^{-1} \Leftrightarrow Q = K(I + GK)^{-1}$$

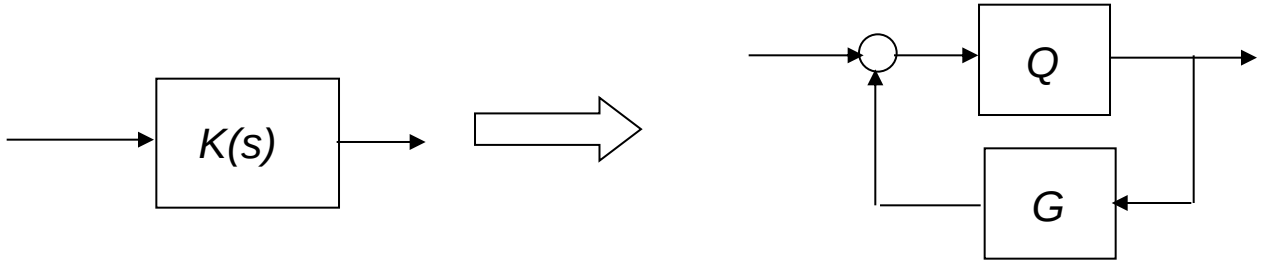

New system structure:

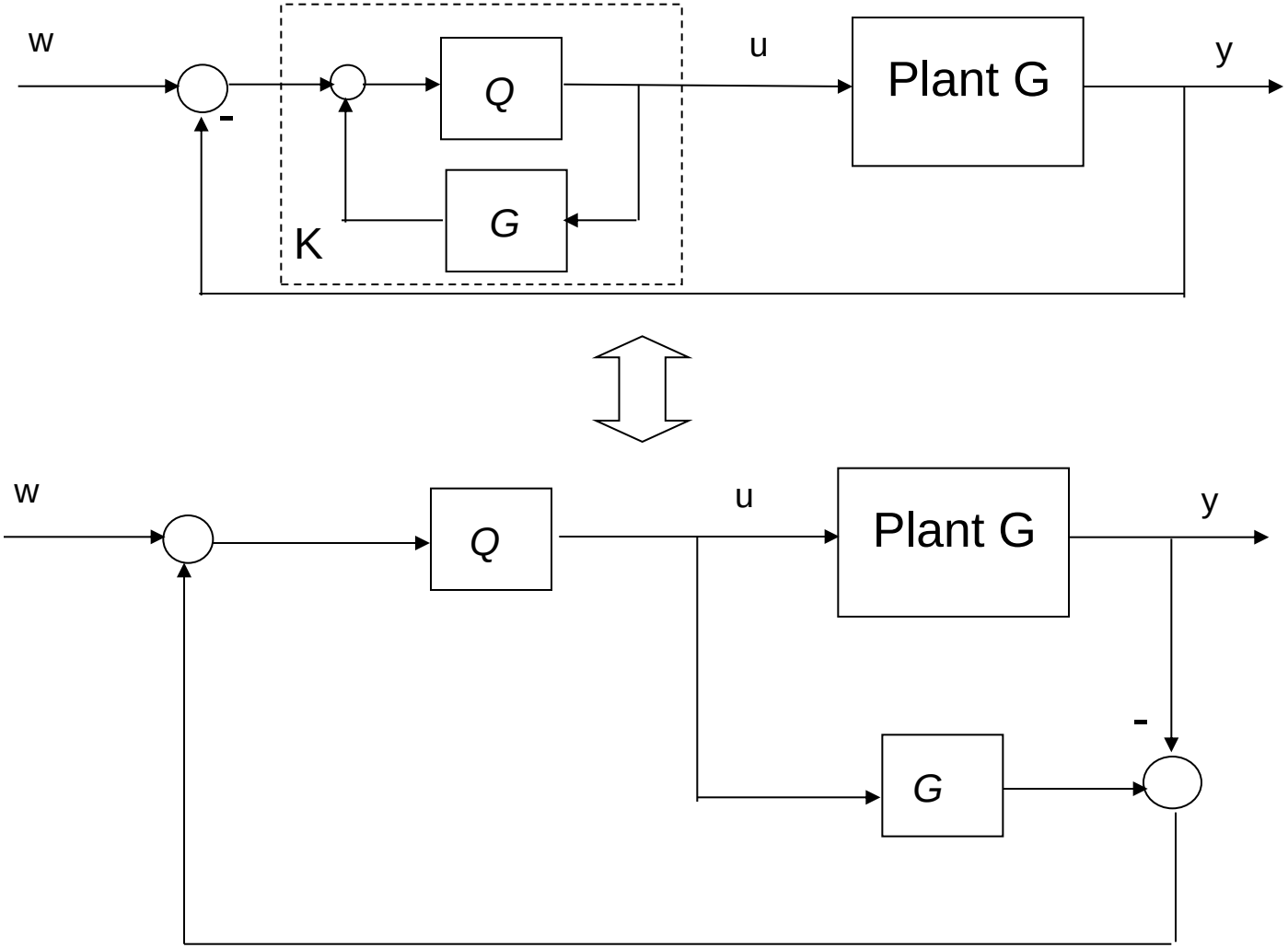

Internal model control (IMC)

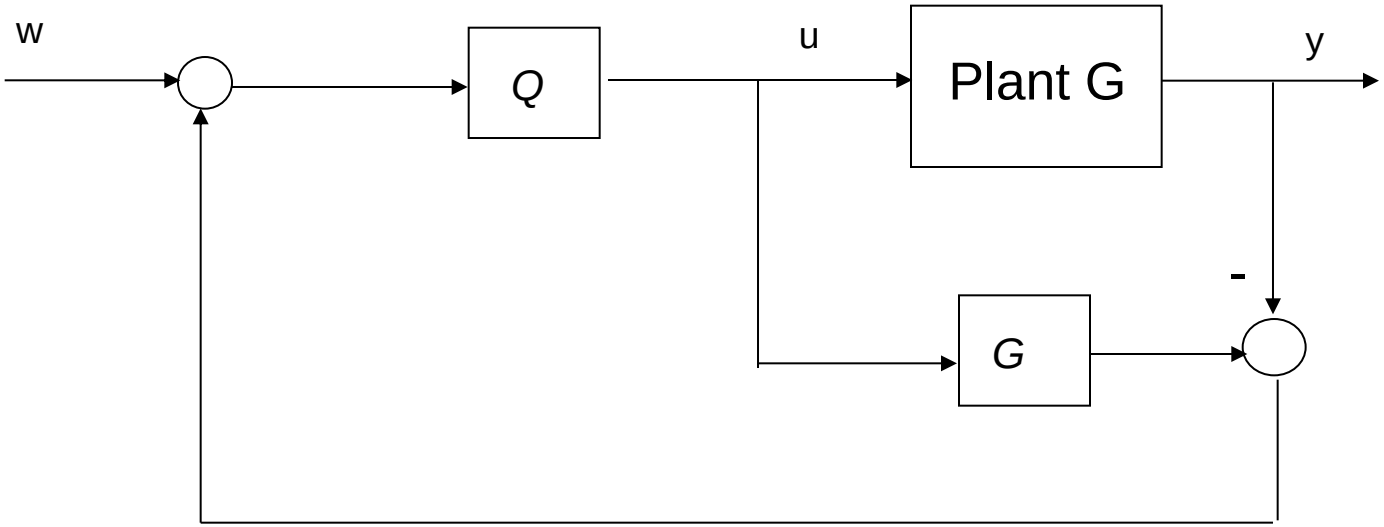

Internal model control:

- quite frequently used in practice
- The “controller” *Q* regulates the estimation error: *e(s) = G(s)u(s)-y(s)*
- consistent design of tracking and disturbance rejection behavior:

$$y(s) = \left(I - G(s)Q(s)\right)d(s) + G(s)Q(s)w(s)$$

Consider the case: G(s) is invertible (stable inverse)

A different interpretation of IMC:

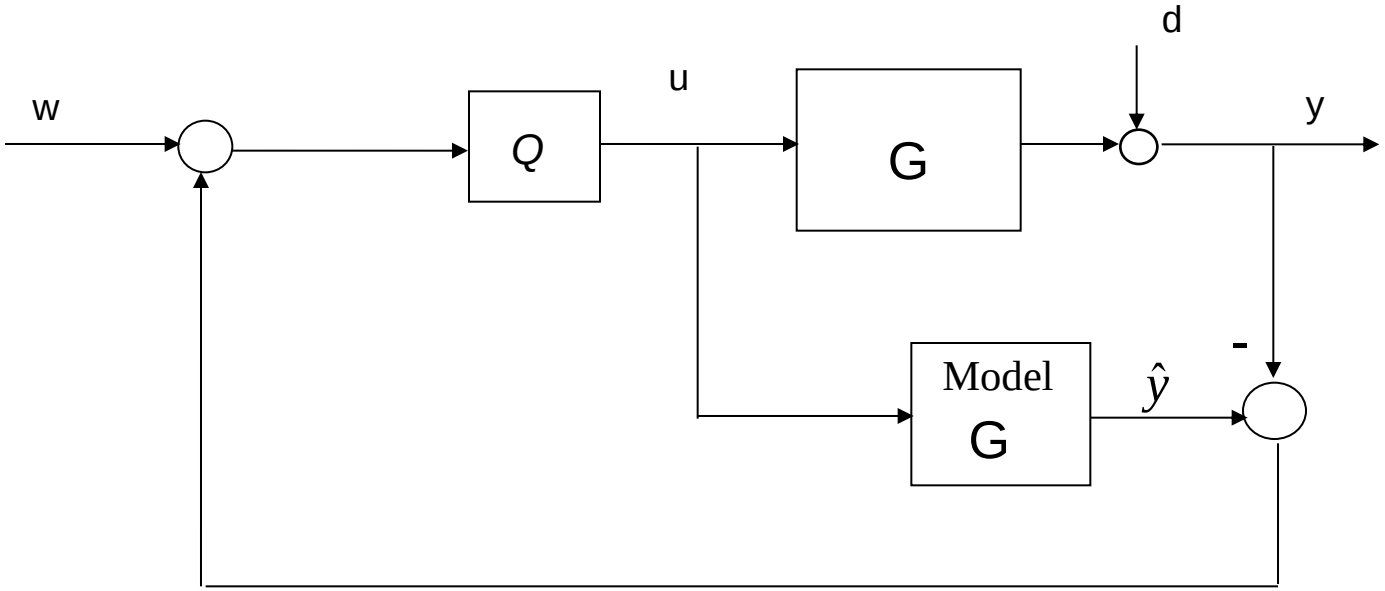

Q(s) serves as a feed-forward controller

The residual, $\hat{y} - y$, is responsible for the robustness and stability

6.2 Observer/residual generation-based realization

$$u = F\hat{x} - Qr = F\hat{x} + Rr$$

$$\dot{\hat{x}} = A\hat{x} + Bu + Lr$$

$$r = y - \hat{y}$$

- The controller in the closed-loop configuration → stable
- The well-posedness is guaranteed (to be discussed in the next section)
- It enables a functionalization of the control parameters

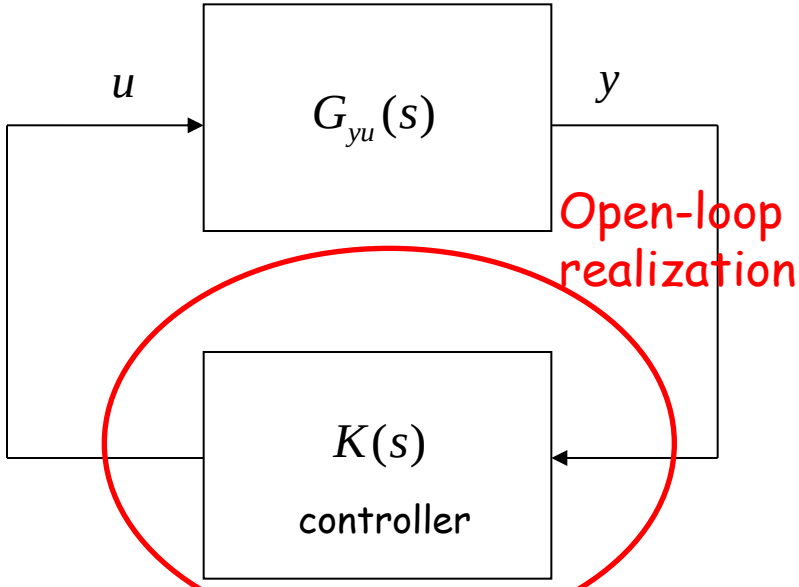

$$K(s) = -\left[\hat{Y}(s) + M(s)Q_c(s)\right]\left[\hat{X}(s) - N(s)Q_c(s)\right]^{-1}$$

$$= -\left[X(s) - Q_c(s)\hat{N}(s)\right]^{-1}\left[Y(s) + Q_c(s)\hat{M}(s)\right]$$

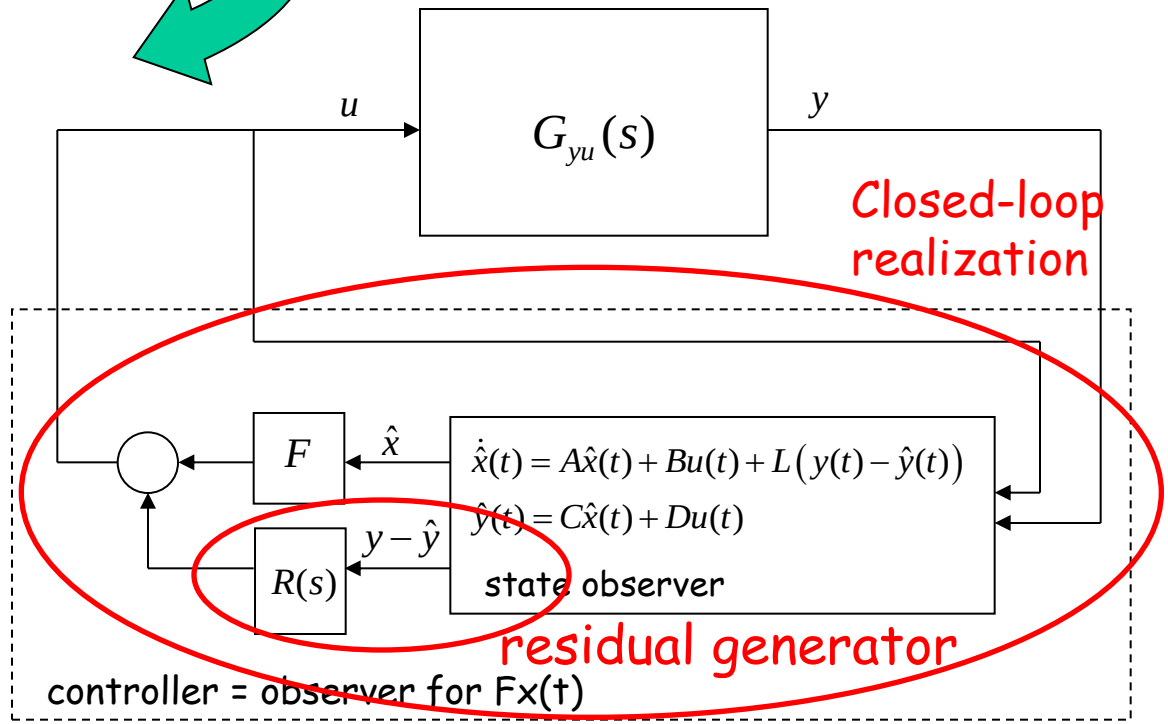

6.3 Well-posedness of closed-loops, Youla parametrization and observer-based realization

A motivation example

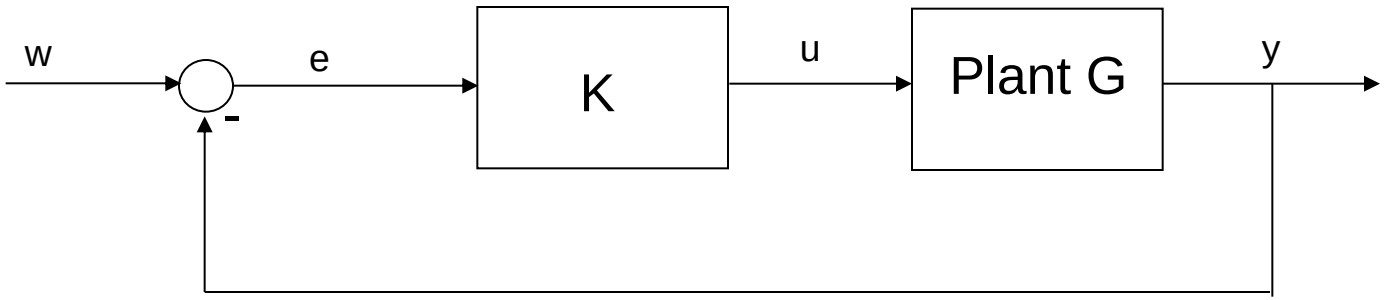

$$G(s) = -\frac{s-1}{s+1}, K = 1 \Rightarrow 1 + G(s) = \frac{2}{s+1}$$

$$\Rightarrow e(s) = \frac{1}{1+G(s)} w = \frac{s+1}{2} w \Rightarrow u(s) = \frac{s+1}{2} w$$

Not realizable (not causal)!

A transfer function G(s) is called proper if

$$G(\infty) < \infty$$

The causality → realisability

The closed-loop is said to be well-posed if ALL closed-loop transfer matrices are well defined and proper.

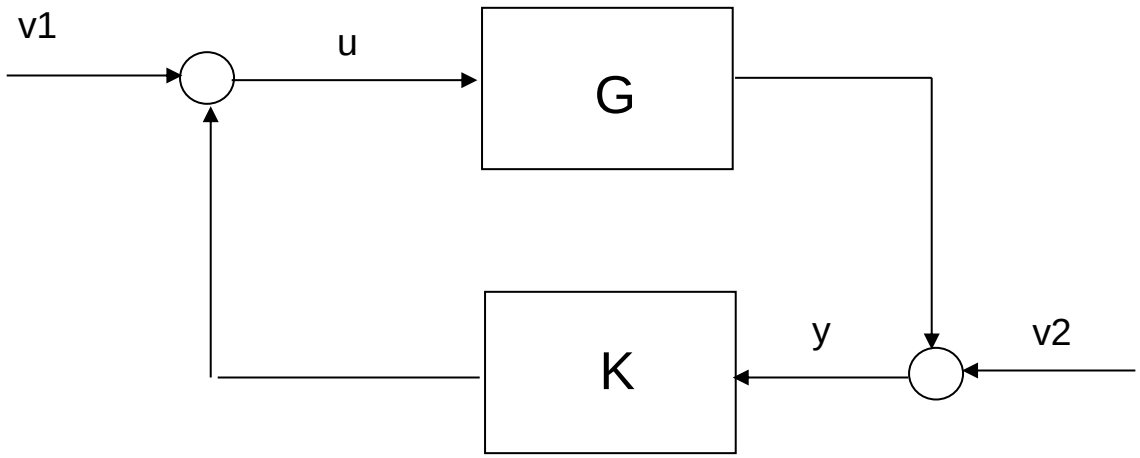

Given the well-posed plant model and controller, the feedback system is well-posed iff

$$I - K(\infty)G(\infty) \text{ is invertible}$$

Outline of the proof:

$$\begin{bmatrix} u \\ y \end{bmatrix} = \begin{bmatrix} v_1 + K(s)y \\ v_2 + G(s)u \end{bmatrix} \Rightarrow \begin{bmatrix} I & -K(s) \\ -G(s) & I \end{bmatrix} \begin{bmatrix} u \\ y \end{bmatrix} = \begin{bmatrix} v_1 \\ v_2 \end{bmatrix} \Leftrightarrow$$

$$\begin{bmatrix} u \\ y \end{bmatrix} = \begin{bmatrix} \left(I - K(s)G(s)\right)^{-1} & K(s)\left(I - G(s)K(s)\right)^{-1} \\ \left(I - G(s)K(s)\right)^{-1} G(s) & \left(I - G(s)K(s)\right)^{-1} \end{bmatrix} \begin{bmatrix} v_1 \\ v_2 \end{bmatrix}$$

$\begin{bmatrix} I & -K(s) \\ -G(s) & I \end{bmatrix}^{-1}$ is well defined and proper if $\left(I - K(\infty)G(\infty)\right)$ is invertible

$$\left(I - K(\infty)G(\infty)\right)^{-1} = I + K(\infty)\left(I - G(\infty)K(\infty)\right)^{-1} G(\infty)$$

$$\left(I - G(\infty)K(\infty)\right)^{-1} = I + G(\infty)\left(I - K(\infty)G(\infty)\right)^{-1} K(\infty)$$

The above condition with the well-posedness is a necessary condition for the design of stabilisation controllers.

By the IMC scheme,

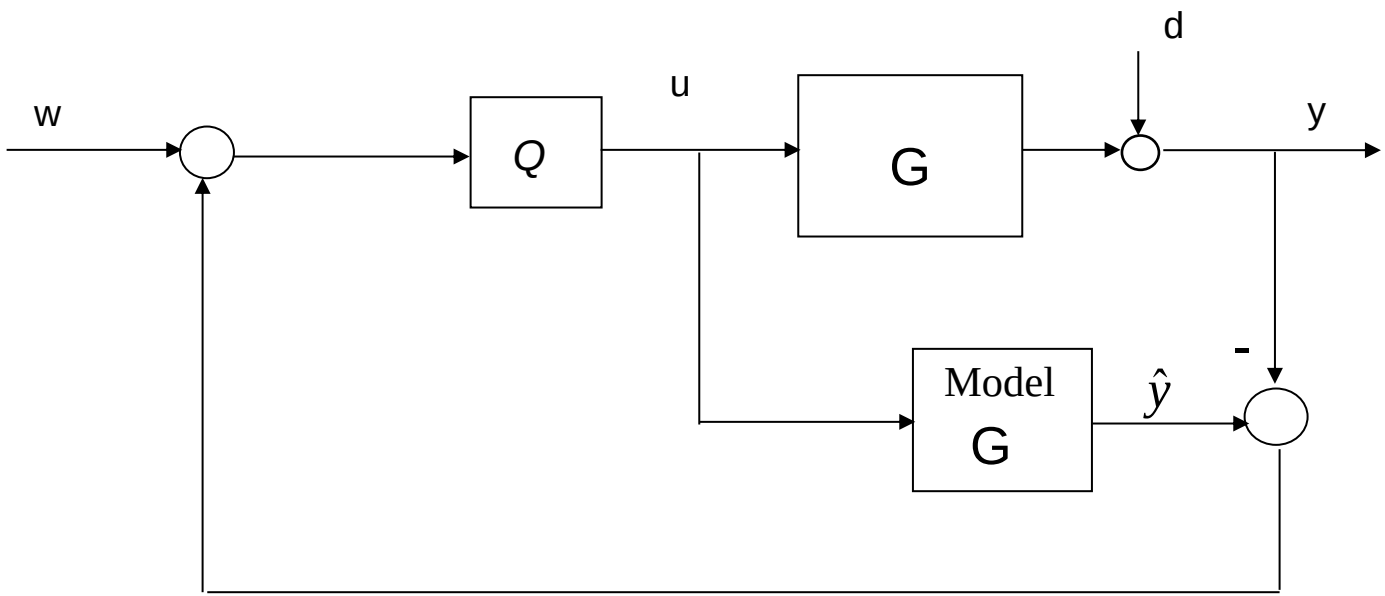

$$u = Qw - Qd, y = GQw + (I - GQ)d$$

All matrices are proper and thus the IMC configuration guarantees the well-posedness.

For the motivation example,

$$G(s) = -\frac{s-1}{s+1}, K = 1 \Rightarrow 1 + G(s) = \frac{2}{s+1}$$

$$K(s) = (I - QG)^{-1} Q = 1 \Rightarrow (I - QG) = Q \Rightarrow Q = \frac{1}{1+G(s)} = \frac{s+1}{2}$$

This is NOT allowed in IMC!

A further example:

$$G(s) = \frac{s-1}{s+1}, L = F = 0, N(s) = G(s), M = 1, \hat{X}(s) = 1, \hat{Y}(s) = 0$$

Design a Youla parametrized controller

$$K(s) = -Q\left(1 - \frac{s-1}{s+1}Q\right)^{-1}, Q = 1 \Rightarrow K(s) = -\frac{s+1}{2}, \text{ Not causal}$$

Not realisable in the classic control configuration.

But, the controller can be realized in the IMC configuration

$$K(s) = -Q\left(1 - \frac{s-1}{s+1}Q\right)^{-1} \Rightarrow$$

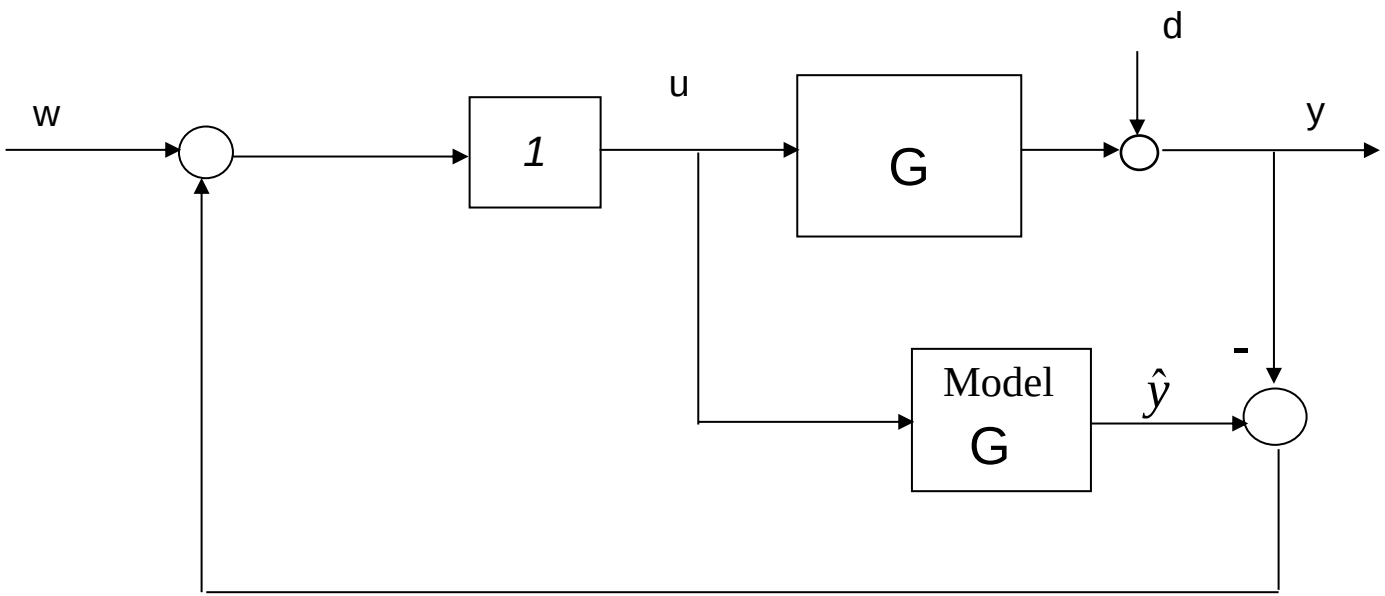

$$u = w - d, y = Gw + (I - G)d$$

In general,

$$\begin{bmatrix} u \\ y \end{bmatrix} = \begin{bmatrix} -(\hat{Y} + MQ) \\ \hat{X} - NQ \end{bmatrix} r$$

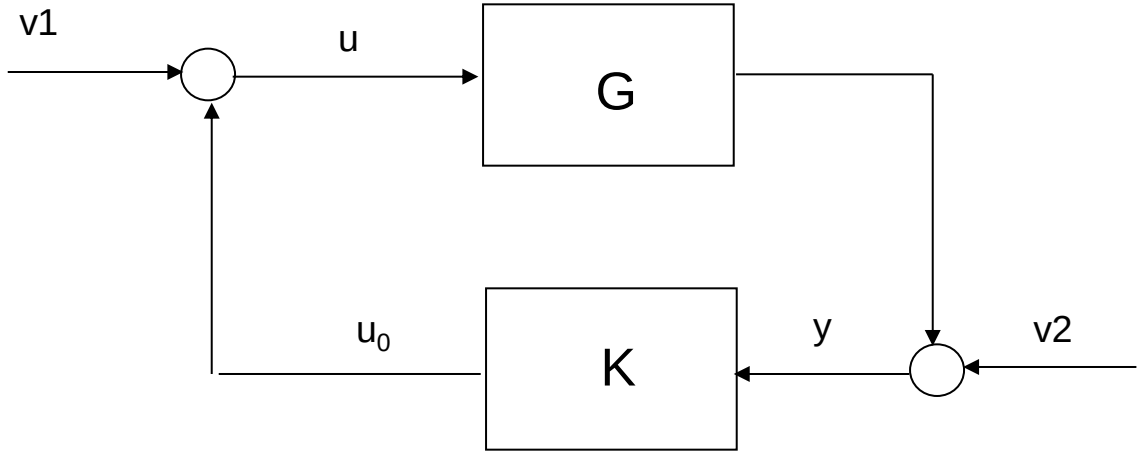

$$\text{residual generator} \begin{cases} \dot{\hat{x}} = A\hat{x} + Bu_0 + L(y - C\hat{x} - Du_0) \\ r = y - \hat{y} \end{cases} \Rightarrow$$

$$r(s): \begin{cases} \dot{e} = (A - LC)e + \left(B - LD\right)v_1 - Lv_2, e = x - \hat{x} \\ r = y - \hat{y} = Ce + Dv_1 + v_2 \end{cases} \Rightarrow r = \hat{N}v_1 + \hat{M}v_2$$

$$\begin{bmatrix} u \\ y \end{bmatrix} = \begin{bmatrix} -(\hat{Y} + MQ) \\ \hat{X} - NQ \end{bmatrix} r = \begin{bmatrix} -(\hat{Y} + MQ) \\ \hat{X} - NQ \end{bmatrix} \begin{bmatrix} \hat{N} & \hat{M} \end{bmatrix} \begin{bmatrix} v_1 \\ v_2 \end{bmatrix}$$

All matrices are proper and thus the observer-based configuration guarantees the well-posedness.

6.4 Functionalisation and parameterisations of the control system

Functionalisation of a control signal

Robustnes
dist. rejection

Dist. compensation
dist. observer

$$u(s) = F\hat{x}(s) + R(s)r(s) + V(s)w_{ref}(s) + DC(s)r(s)$$

Stability
Eigen-dynamics

Feed forward contr.
tracking behaviors

6.5 Parameterisation in an existing control loop

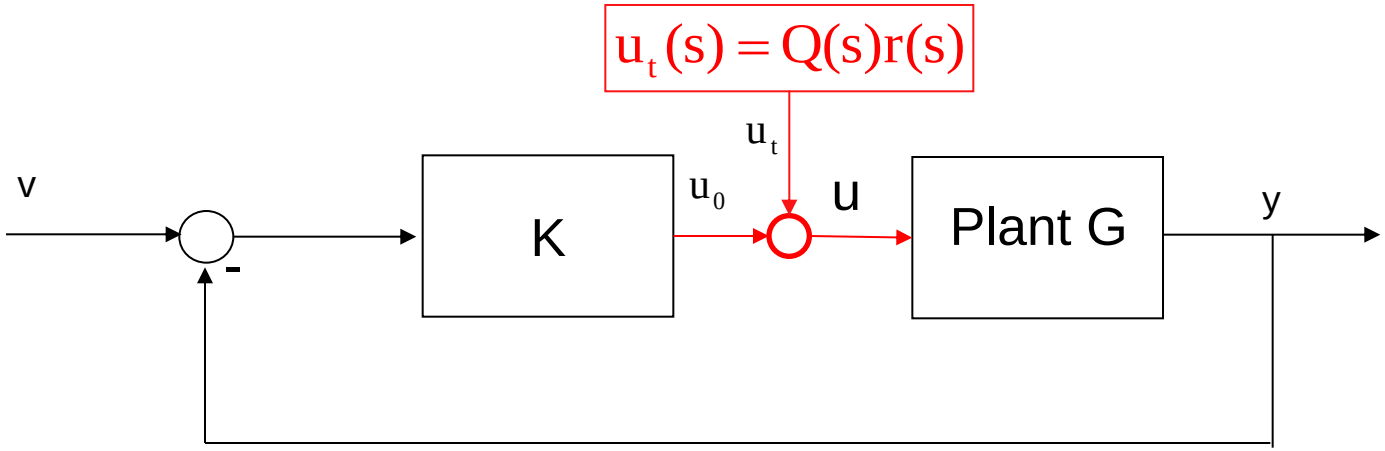

Parameterization of all (additional) controller by Q(s) (with the stability guarantee).

6.6 On closed-loop realization of a stabilisation controller

A motivation example

$$K(s) = s + 1, \text{ a PD controller. not causal}$$

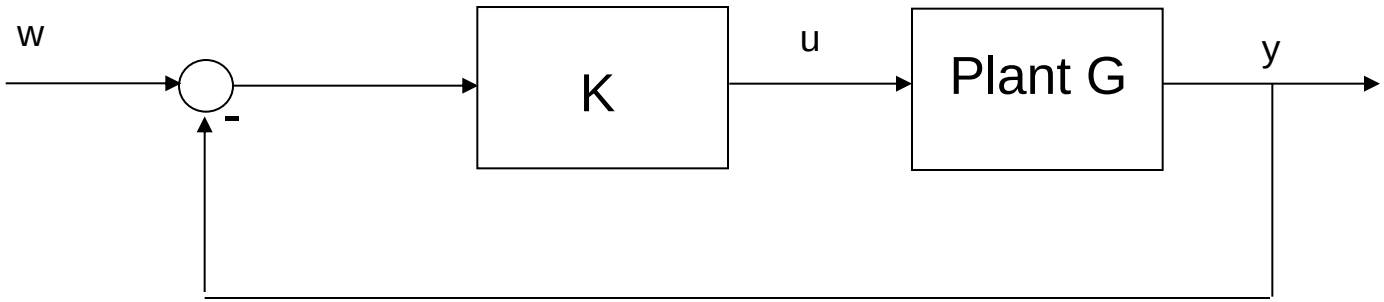

The closed-loop is stable, e.g. $G(s) = \dfrac{1}{(s+1)(s+0.1)}$

By a closed-loop realization of K(s)

$$K(s) = s + 1 = Q\left(1 - \frac{s}{s+1}Q\right)^{-1}, \text{ Q=1}$$

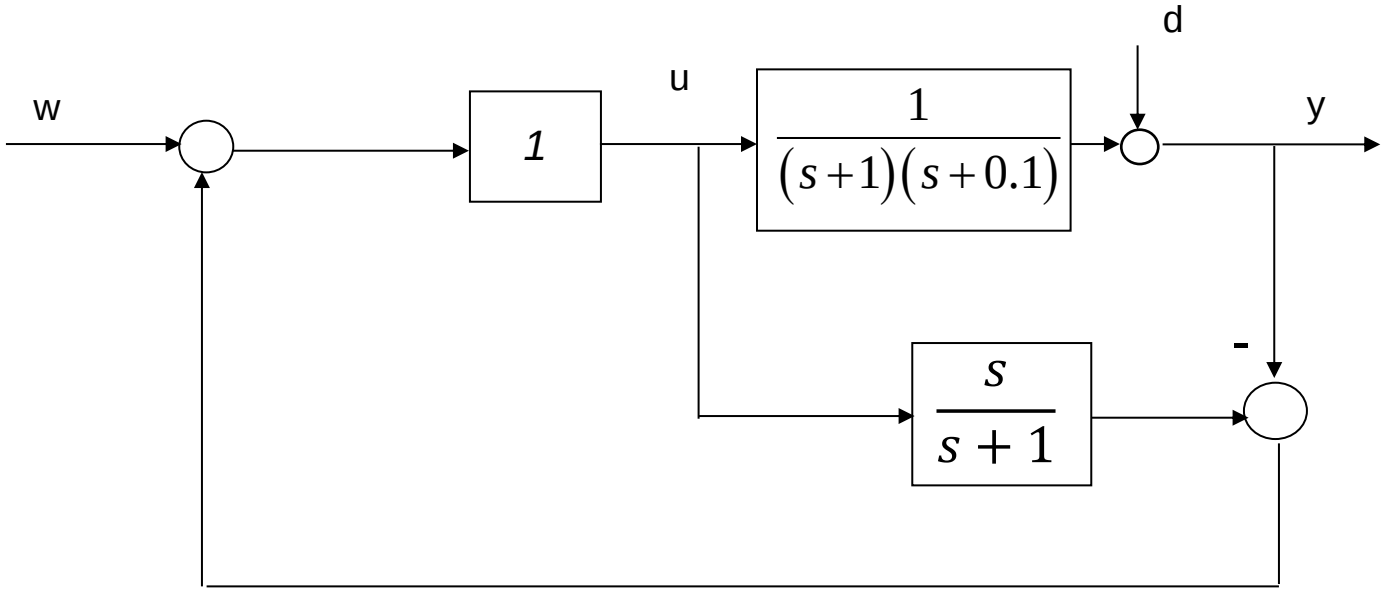

$$K(s) = s+1 = Q\left(1 - \frac{s}{s+1}Q\right)^{-1}, \text{ Q=1}$$

The controller is well-posed.

It is NOT an IMC.

A general solution

Let $K(s) = \hat{V}^{-1}(s)\hat{U}(s)$, can be NOT proper, but $\hat{V}(s), \hat{U}(s)$ are proper and stable

$$\Rightarrow \hat{V}(s)u(s) = \hat{U}(s)y(s)$$

Set $\bar{V}(s) = \hat{V}(s) + I \Rightarrow u(s) = \hat{U}(s)y(s) \Rightarrow u(s) = \left(\bar{V}(s) - I\right)^{-1}\hat{U}(s)y(s)$

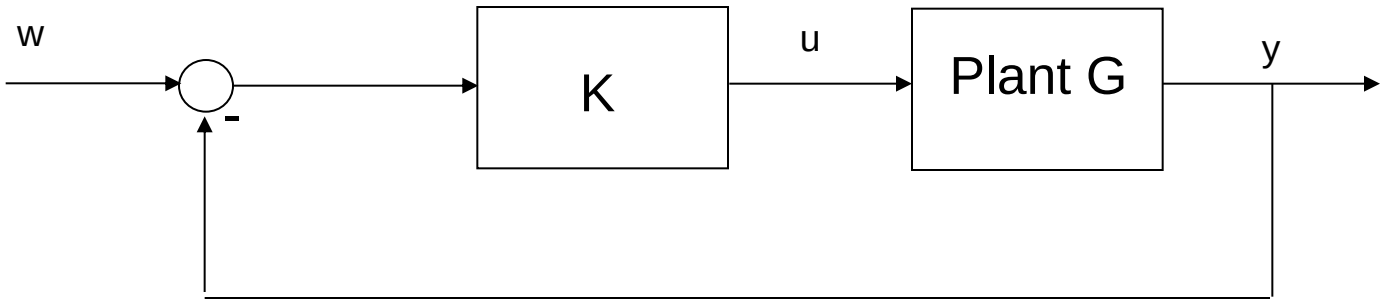

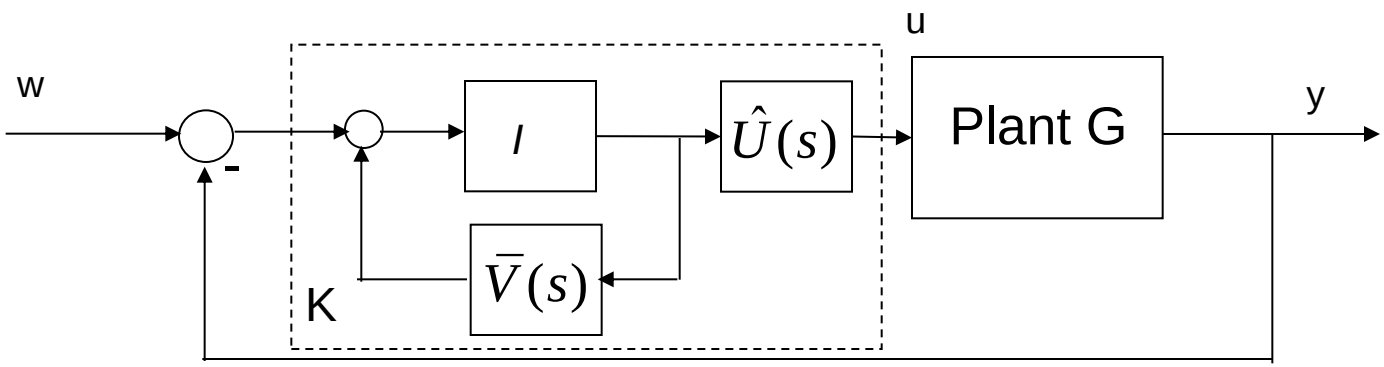

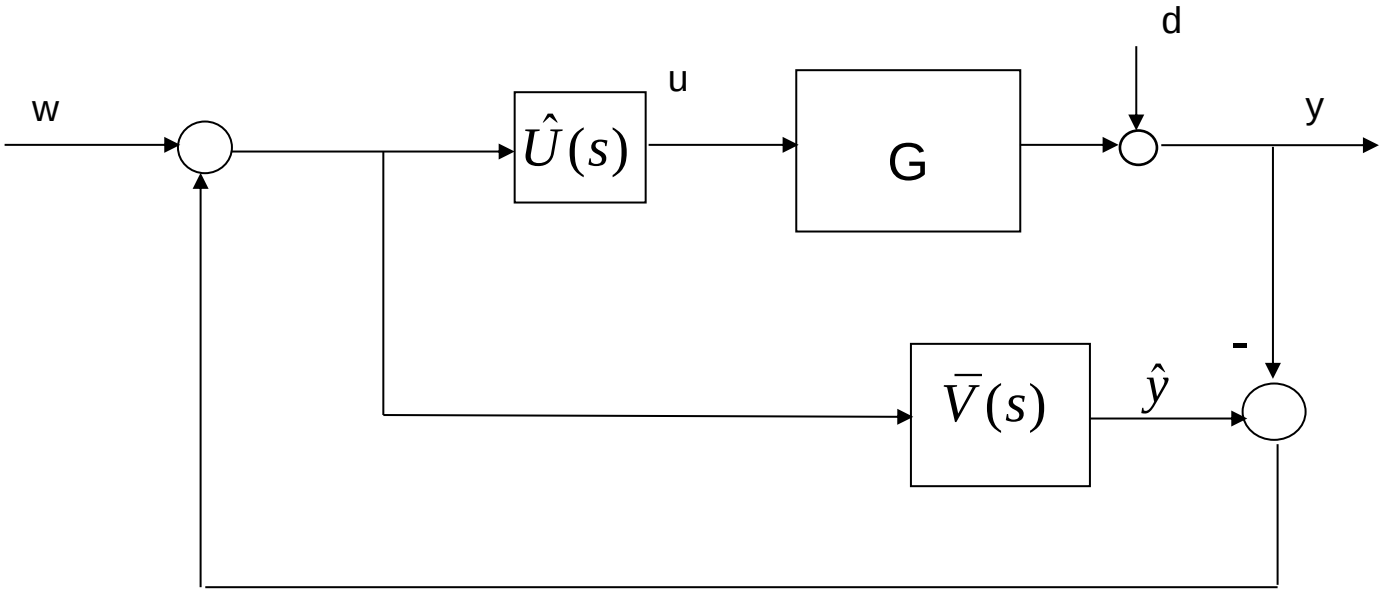
d
w
u
y
$\hat{U}(s)$
G
-
$\bar{V}(s)$
$\hat{y}$

6.7 Dual form of Youla parametrisation

Bezout identity

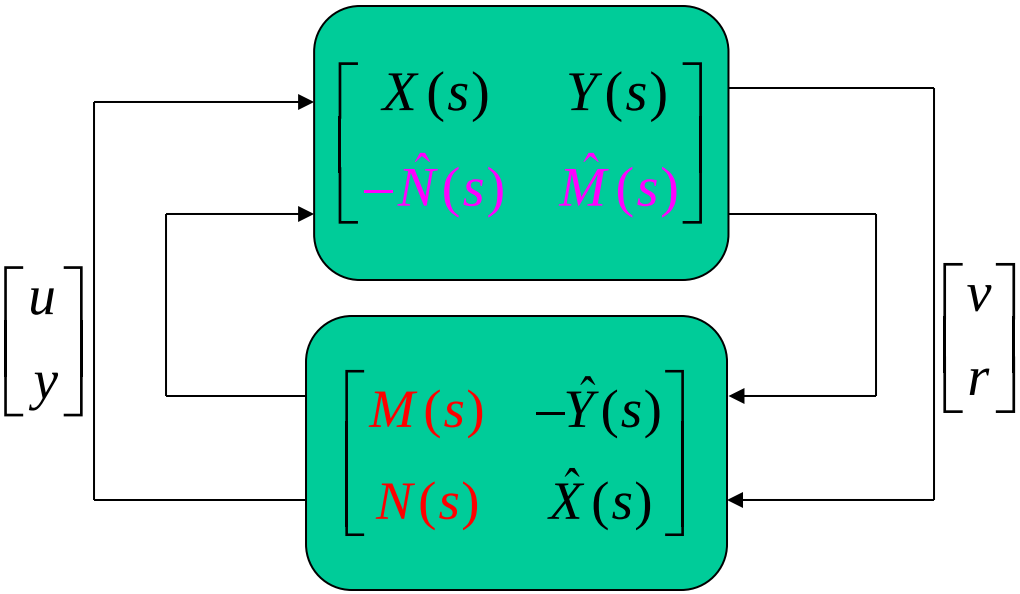

Youla-Parameterization

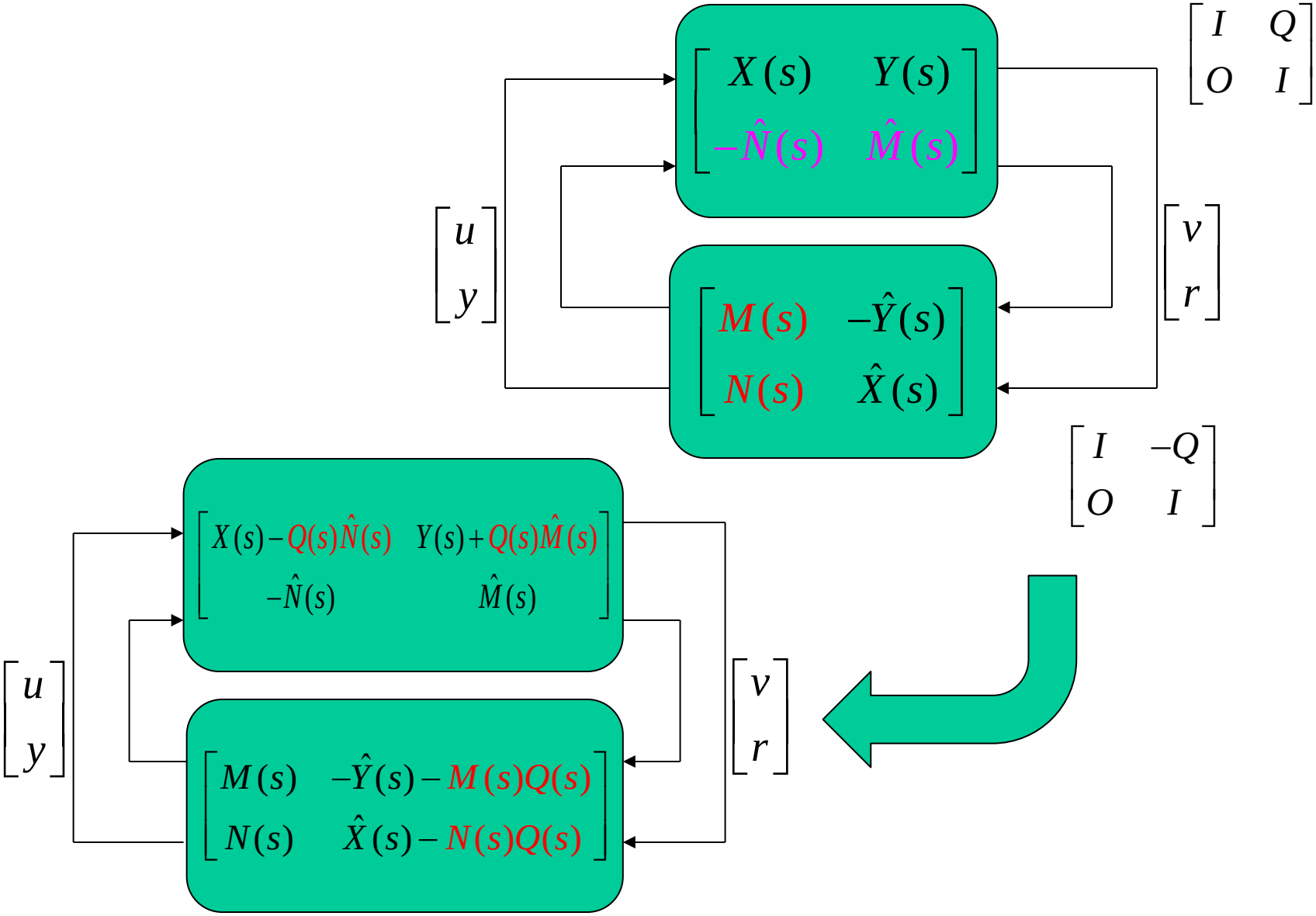

Dual form:

S(s) is a stable system, representing uncertainty

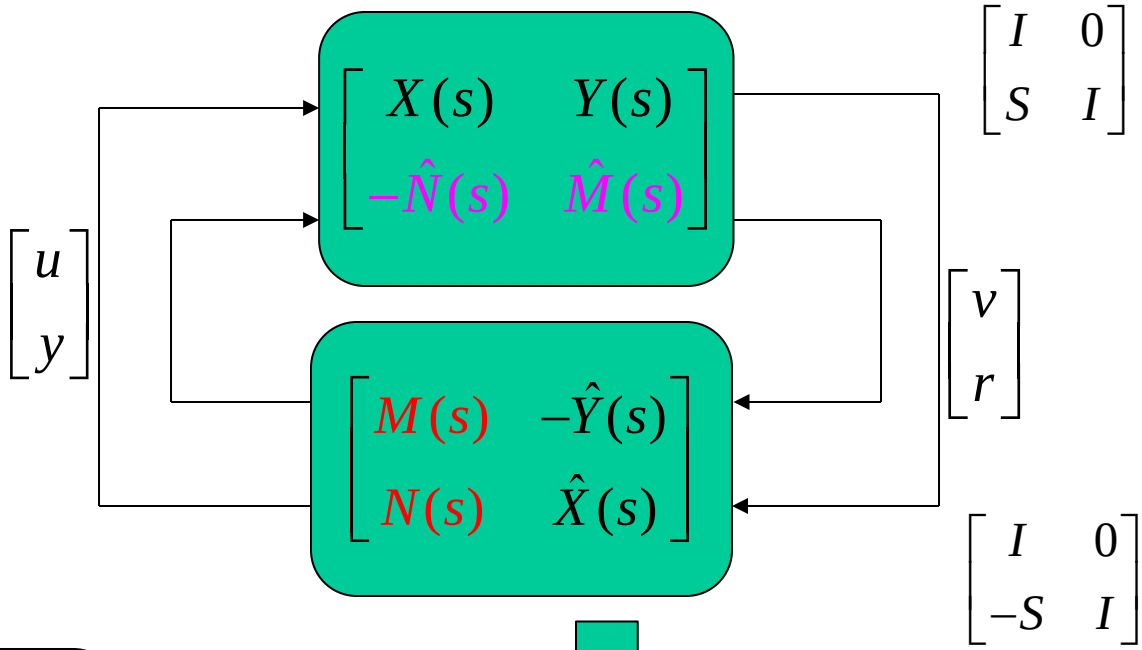

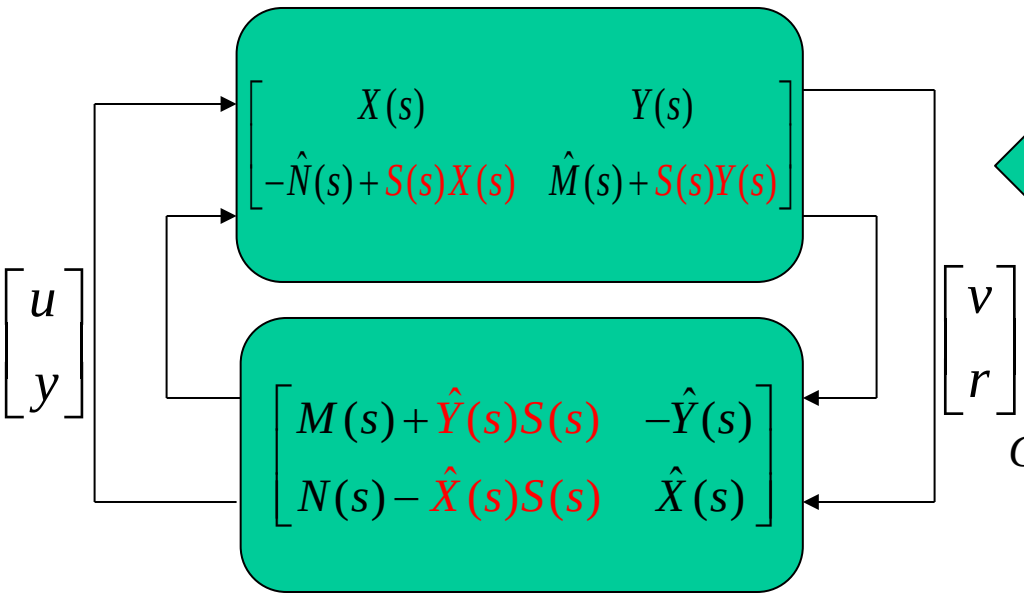

A controller,

$$K(s) = -\hat{Y}(s)\hat{X}^{-1}(s)$$
$$= -X^{-1}(s)Y(s)$$

can stabilize the plant with uncertainty

$$G(s) = \left(N(s) - \hat{X}(s)S(s)\right)\left(M(s) + \hat{Y}(s)S(s)\right)^{-1}$$
$$= \left(\hat{M}(s) + S(s)Y(s)\right)^{-1}\left(\hat{N}(s) - S(s)X(s)\right)$$

Consider the control structure

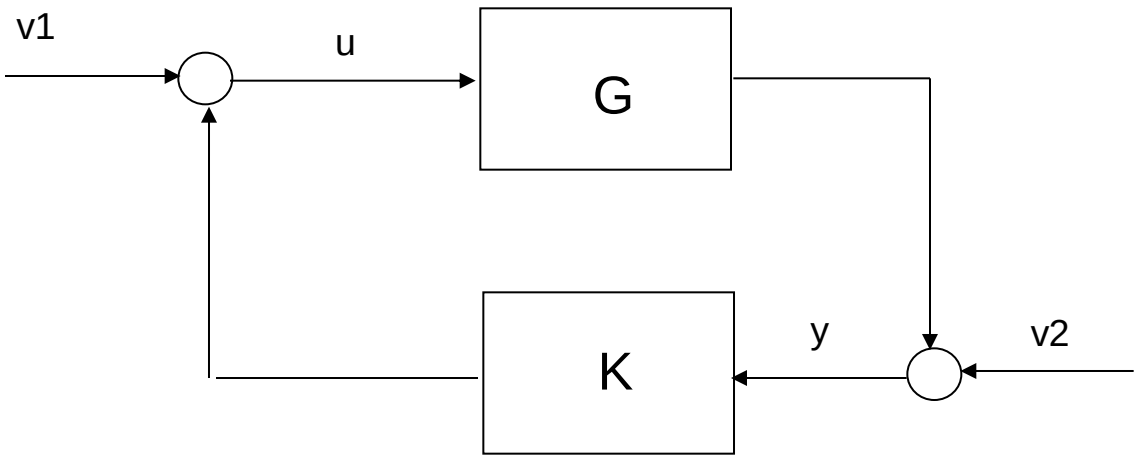

Assume that the closed-loop is stable. Let

Parameterization of the plant

$$K = UV^{-1} = \hat{V}^{-1}\hat{U} = N_K M_K^{-1} = \hat{M}_K^{-1}\hat{N}_K \Rightarrow$$

$$y = -(\hat{Y}_K + M_K S)(\hat{X}_K - N_K S)^{-1}u = -(X_K - S\hat{N}_K)^{-1}(Y_K + S\hat{M}_K)u, S \in RH_\infty$$

$$\begin{bmatrix} X_K(s) & Y_K(s) \\ -\hat{N}_K(s) & \hat{M}_K(s) \end{bmatrix} \begin{bmatrix} M_K(s) & -\hat{Y}_K(s) \\ N_K(s) & \hat{X}_K(s) \end{bmatrix} = I, K = \left(A_K, B_k, C_K, D_K\right)$$

Consider the dual form of Youla parameterization and assume that

$$G(s) = \left(\hat{M} - SY\right)^{-1}(\hat{N} + SX), S \in RH_\infty$$

$$K(s) = -(X - Q\hat{N})^{-1}(Y + Q\hat{M}), Q \in RH_\infty$$

It holds

$$r = \hat{M}y - \hat{N}u = SYy + SXu = -Sv, v = -\left(Yy + Xu\right)$$

$$\left(X - Q\hat{N}\right)u + (Y + Q\hat{M})y = 0 \Rightarrow v = Qr$$

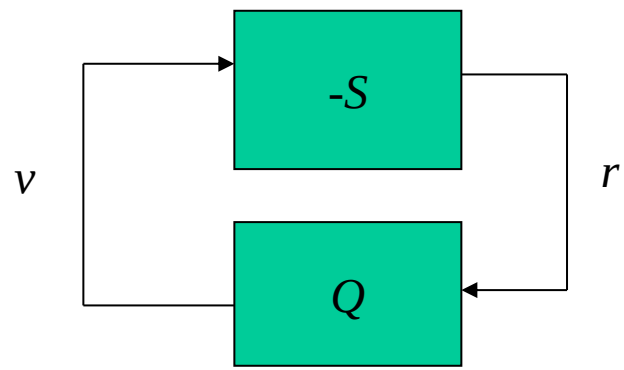

The above closed-loop is stable, if, by Small-gain theorem,

$$\|Q\|_\infty \|S\|_\infty < 1$$

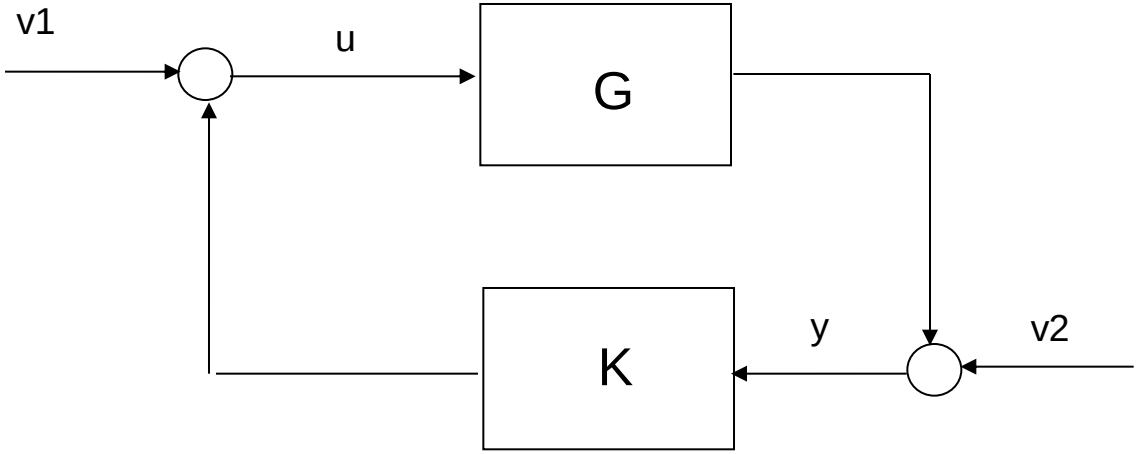

$$\begin{bmatrix} u \\ y \end{bmatrix} = \begin{bmatrix} I & -K(s) \\ -G(s) & I \end{bmatrix}^{-1} \begin{bmatrix} v_1 \\ v_2 \end{bmatrix} \text{ is stable } \Leftrightarrow \begin{bmatrix} I & -K(s) \\ -G(s) & I \end{bmatrix}^{-1} \in RH_\infty$$

$$\Leftrightarrow \begin{bmatrix} X - Q\hat{N} & -Y - Q\hat{M} \\ \hat{N} + SX & \hat{M} - SY \end{bmatrix}^{-1} \in RH_\infty$$

$$\begin{bmatrix} X - Q\hat{N} & -Y - Q\hat{M} \\ \hat{N} + SX & \hat{M} - SY \end{bmatrix} = \begin{bmatrix} X & -Y \\ \hat{N} & \hat{M} \end{bmatrix} + \begin{bmatrix} -Q\hat{N} & -Q\hat{M} \\ SX & -SY \end{bmatrix}$$

$$\begin{bmatrix} -Q\hat{N} & -Q\hat{M} \\ SX & -SY \end{bmatrix} = \begin{bmatrix} -Q & 0 \\ 0 & S \end{bmatrix} \begin{bmatrix} \hat{N} & \hat{M} \\ X & -Y \end{bmatrix} = \begin{bmatrix} 0 & -Q \\ S & 0 \end{bmatrix} \begin{bmatrix} X & -Y \\ \hat{N} & \hat{M} \end{bmatrix}$$

$$\begin{bmatrix} X - Q\hat{N} & -Y - Q\hat{M} \\ \hat{N} + SX & \hat{M} - SY \end{bmatrix} = \begin{bmatrix} I & -Q \\ S & I \end{bmatrix} \begin{bmatrix} X & -Y \\ \hat{N} & \hat{M} \end{bmatrix}$$

$$\begin{bmatrix} I & -K(s) \\ -G(s) & I \end{bmatrix}^{-1} \in RH_\infty \Leftrightarrow \begin{bmatrix} I & -Q \\ S & I \end{bmatrix}^{-1}, \begin{bmatrix} X & -Y \\ \hat{N} & \hat{M} \end{bmatrix}^{-1} \in RH_\infty$$

$$\begin{bmatrix} I & -Q \\ S & I \end{bmatrix}^{-1} \in RH_\infty \Leftrightarrow$$

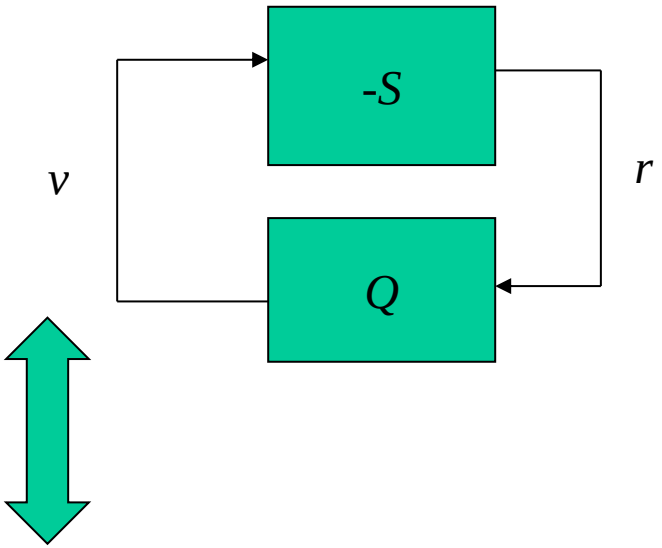

$$\|Q\|_\infty \|S\|_\infty < 1$$

The overall closed-loop is stable, if

$$\|Q\|_\infty \|S\|_\infty < 1$$

Potential applications to plant identification (in the closed-loop)

Consider the control structure

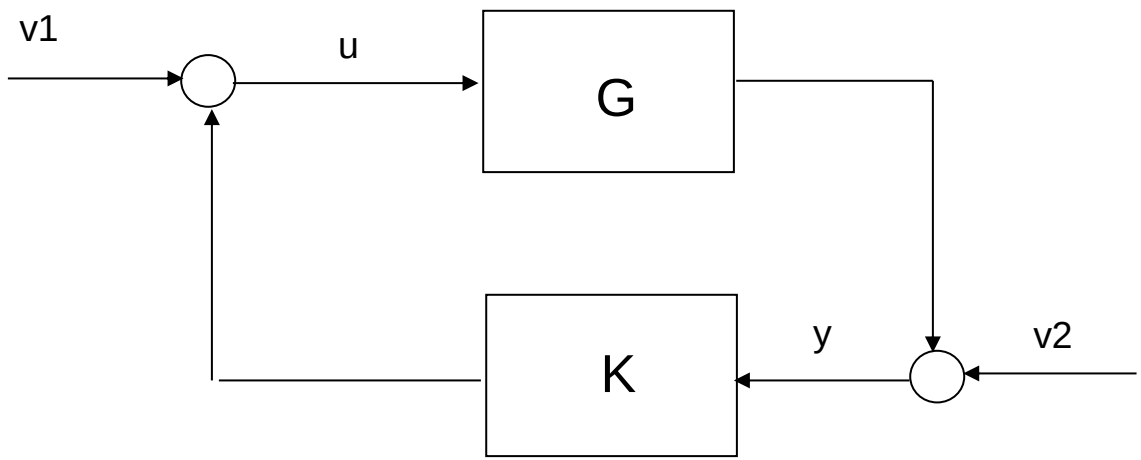

Assume that the closed-loop is stable. Given the controller: $K = \left(A_K, B_k, C_K, D_K\right)$

Let

Parameterization of the plant

$$K = UV^{-1} = \hat{V}^{-1}\hat{U} := N_K M_K^{-1} = \hat{M}_K^{-1}\hat{N}_K \Rightarrow$$

$$y = -(\hat{Y}_K + M_K S)(\hat{X}_K - N_K S)^{-1}u = -(X_K - S\hat{N}_K)^{-1}(Y_K + S\hat{M}_K)u, S \in RH_\infty$$

$$\begin{bmatrix} X_K(s) & Y_K(s) \\ -\hat{N}_K(s) & \hat{M}_K(s) \end{bmatrix} \begin{bmatrix} M_K(s) & -\hat{Y}_K(s) \\ N_K(s) & \hat{X}_K(s) \end{bmatrix} = I$$

Residual generation with the controller:

$$K = \hat{M}_K^{-1}\hat{N}_K \Rightarrow u_o = \hat{M}_K^{-1}\hat{N}_K y$$

$$\Rightarrow r_k = \hat{M}_K u - \hat{N}_K y = \hat{M}_K v_1 = \bar{v}_1$$

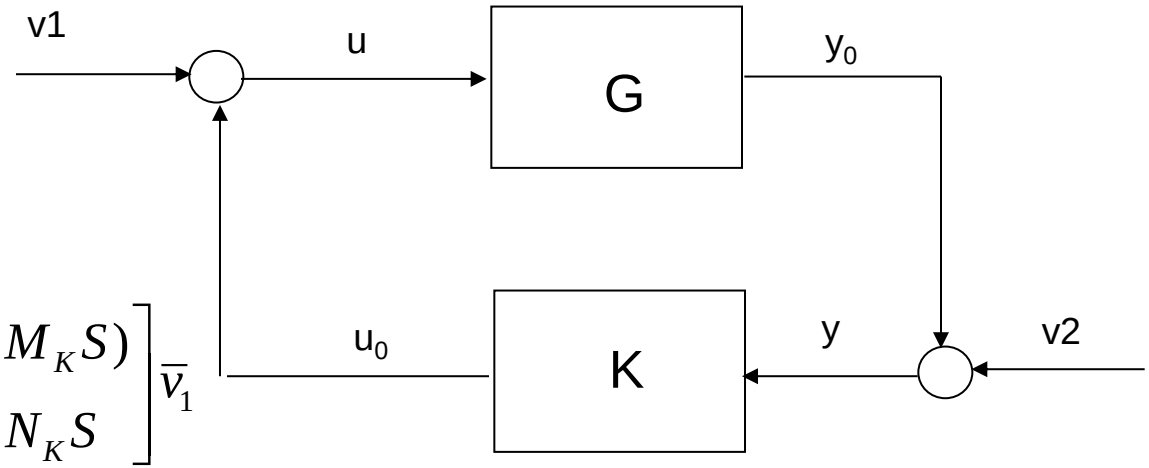

$$\begin{bmatrix} y_0 \\ u \end{bmatrix} = \begin{bmatrix} -(\hat{Y}_K + M_K S) \\ \hat{X}_K - N_K S \end{bmatrix} r_K = \begin{bmatrix} -(\hat{Y}_K + M_K S) \\ \hat{X}_K - N_K S \end{bmatrix} \bar{v}_1$$

SIR of the plant

$$\begin{bmatrix} y \\ u \end{bmatrix} = \begin{bmatrix} -(\hat{Y}_K + M_K S) \\ \hat{X}_K - N_K S \end{bmatrix} r_K + \begin{bmatrix} v_2 \\ 0 \end{bmatrix} = \begin{bmatrix} -(\hat{Y}_K + M_K S) \\ \hat{X}_K - N_K S \end{bmatrix} \bar{v}_1 + \begin{bmatrix} v_2 \\ 0 \end{bmatrix}$$

SIR of the plant can be identified using the data

$$\bar{v}_1(k) \rightarrow \begin{bmatrix} y(k) \\ u(k) \end{bmatrix}, k = 1, \cdots, N$$

It follows from the observer-based realization of the Youla parameterization:

Let

x_k be the state vector of the controller,

F_K, L_K be the "state feedback, observer" gains of the RCF/LCF of the controller

Then

$$\dot{\hat{x}}_k = \left(A_K - L_K C_K\right)\hat{x}_k + \left(B_k - L_K D_K\right)y + L_K r_k = A_K \hat{x}_k + B_k y + L_K \bar{v}_1$$

$$= \left(A_K - B_k F_K\right)\hat{x}_k + \left(L_K - B_k S\right)\bar{v}_1$$

$$y = F_K \hat{x}_k - S r_k, r_k = \bar{v}_1 = \hat{M}_K u - \hat{N}_K y$$

Identification of S:

$$S r_k = F_K \hat{x}_k - y$$

$$\begin{bmatrix} y(k) \\ u(k) \end{bmatrix} \text{ or } \begin{bmatrix} y(k) \\ \bar{v}_1(k) \end{bmatrix} \rightarrow \hat{x}_K(k), k = 1, \cdots, N$$

$$\bar{v}_1(k) \rightarrow F_K \hat{x}_K(k) - y(k), k = 1, \cdots, N$$

System model (closed-loop)

$$\dot{\hat{x}}_k = \left(A_K - B_k F_K\right)\hat{x}_k + \left(L_K - B_k S\right)\bar{v}_1$$
$$y = F_K \hat{x}_k - S\bar{v}_1$$

$$S : \dot{x}_S = A_S x_S + B_S v_1, y_S = C_S x_S + D_S v_1$$

The final model:

$$\begin{bmatrix} \dot{\hat{x}}_k \\ \dot{x}_S \end{bmatrix} = \begin{bmatrix} A_K - B_k F_K & -B_k C_S \\ 0 & A_S \end{bmatrix} \begin{bmatrix} \hat{x}_k \\ x_S \end{bmatrix} + \begin{bmatrix} L_K - B_k D_S \\ B_S \end{bmatrix} \bar{v}_1$$
$$y = \begin{bmatrix} F_K & -C_S \end{bmatrix} \begin{bmatrix} \hat{x}_k \\ x_S \end{bmatrix} - D_S \bar{v}_1$$

An alternative way:

$$y = -(X_K - S\hat{N}_K)^{-1}(Y_K + S\hat{M}_K)u,$$

6.8 The parametrisation of stabilisation controllers and its relationship to the observer-based state-feedback controllers

Given a system **G**:

$$G: \dot{x} = Ax + Bu, y = Cx + Du$$

One can find an observer-based state-feedback controller:

$$\dot{\hat{x}} = A\hat{x} + Bu + L(y - C\hat{x} - Du), u = F\hat{x}$$

To design the observer gain *L* and feedback gain *F,* introduce

$$e = x - \hat{x} \text{ which leads to}$$

$$\dot{e} = (A - LC)e \Rightarrow \begin{bmatrix} \dot{x} \\ \dot{e} \end{bmatrix} = \begin{bmatrix} A + BF & -BF \\ 0 & A - LC \end{bmatrix} \begin{bmatrix} x \\ e \end{bmatrix}$$

Thus, the feedback control system is stable if and only if *F,L* are chosen such that the eigenvalues of *A+BF, A-LC* lie in the LHP.

$$u = F\hat{x}, \dot{\hat{x}} = A\hat{x} + Bu + L(y - C\hat{x} - Du)$$

can be re-written into

$$\dot{\hat{x}} = A\hat{x} + Bu + L(y - C\hat{x} - Du) \Rightarrow \dot{\hat{x}} = (A + BF - LDF - LC)\hat{x} + Ly$$

$$\Rightarrow \hat{x}(s) = (sI - A - BF + LDF + LC)^{-1} Ly(s), u(s) = F\hat{x}(s)$$

$$\Rightarrow u(s) = F(sI - A - BF + LDF + LC)^{-1} Ly(s) = K(s)y(s)$$

$$K(s) =: (A_K, B_K, C_K, D_K), A_K = A + BF - LDF - LC, B_K = L, C_K = F, D_K = 0$$

An observer-based state-feedback controller is a dynamic output controller which also belongs to the set of the stabilisation controllers

How can we write the controller into the parameterisation form?

- Doing a coprime factorisation of the controller *K(s)* using the given algorithm

$$K(s) = N_K(s) M_K^{-1}(s), (M_K, N_K) \text{ right-coprime of } K(s)$$

$$N_K(s) = \left(C_K + D_K \hat{F}\right)(sI - A_K - B_K \hat{F})^{-1} B_K, M_K(s) = I + \hat{F}(sI - A_K - B_K \hat{F})^{-1} B_K$$

- Set $\hat{F} = C + DF \Rightarrow$

$$N_K(s) = F(sI - A - BF)^{-1} L, M_K(s) = I + (C + DF)(sI - A - BF)^{-1} L$$

- Final check: Following the parameterisation algorithm

$$K(s) = -(\hat{Y}(s) + M(s)Q(s))(\hat{X}(s) - N(s)Q(s))^{-1}$$

$$\hat{Y}(s) = -F(sI - A - BF)^{-1}L, \hat{X}(s) = I + (C + DF)(sI - A - BF)^{-1}L$$

Setting $Q(s) = 0 \Rightarrow N_K(s) = -\hat{Y}(s), M_K(s) = \hat{X}(s)$

It is the answer to the question.

Is every (dynamic) output controller an observer-based state-feedback controller?

6.9 Relations between the F, L and parameterization matrices

Given any two realizations of SIR and SKR,

$$\begin{bmatrix} u(z) \\ y(z) \end{bmatrix} = \begin{bmatrix} M_1(z) \\ N_1(z) \end{bmatrix} v_1(z) = \begin{bmatrix} M_2(z) \\ N_2(z) \end{bmatrix} v_2(z)$$

$$r_1(z) = \hat{M}_1(z)y(z) - \hat{N}_1(z)u(z), r_2(z) = \hat{M}_2(z)y(z) - \hat{N}_2(z)u(z)$$

$$M_i(z) = (A_{F_i}, B, F_i, I)\,, N_i(z) = (A_{F_i i}, B, C + DF_i, D)$$

$$\hat{M}_i(z) = (A_{L_i}, -L_i, C, I)\,, \hat{N}_i(z) = (A_{L_i}, B - L_i D, C, D)$$

$$A_{F_i} = A + BF_i, A_{L_i} = A - L_i C, i = 1, 2$$

it holds

$$\begin{bmatrix} M_2(z) \\ N_2(z) \end{bmatrix} = \begin{bmatrix} M_1(z) \\ N_1(z) \end{bmatrix} Q_{SIR}(z) \Longrightarrow$$

$$v_1(z) = Q_{SIR}(z)v_2(z), Q_{SIR}(z) = I + (F_2 - F_1)\,(zI - A_{F_2})^{-1}\,B \in \mathcal{RH}_\infty$$

$$\left[\hat{M}_2(z)\ \hat{N}_2(z)\right] = Q_{SKR}(z)\left[\hat{M}_1(z)\ \hat{N}_1(z)\right] \Longrightarrow$$

$$r_2(z) = Q_{SKR}(z)r_1(z), Q_{SKR}(z) = I - C\,(zI - A_{L_2})^{-1}\,(L_2 - L_1) \in \mathcal{RH}_\infty.$$

7 Parametrisation of linear observers

7.1 Basic idea:

Rewrite the standard form of an observer for the estimation of *Fx(t)*

$$\dot{\hat{x}} = A\hat{x} + Bu + L(y - C\hat{x} - Du), u = F\hat{x}$$

for a given plant model

$$G : \dot{x} = Ax + Bu, y = Cx + Du$$

into

$$F\hat{x}(s) = F(s)u(s) + H(s)y(s)$$

$$F(s) = F(sI - A + LC)^{-1}(B - LD), H(s) = F(sI - A + LC)^{-1}L$$

This suggests a more general form of linear observers

$$x_F(s) = F(s)u(s) + H(s)y(s) \text{ satisfying}$$

$$\lim_{t\to\infty}\left(Fx(t) - x_F(t)\right) = 0$$

Problem to be solved: under which condition *F(s), H(s)* can be found?

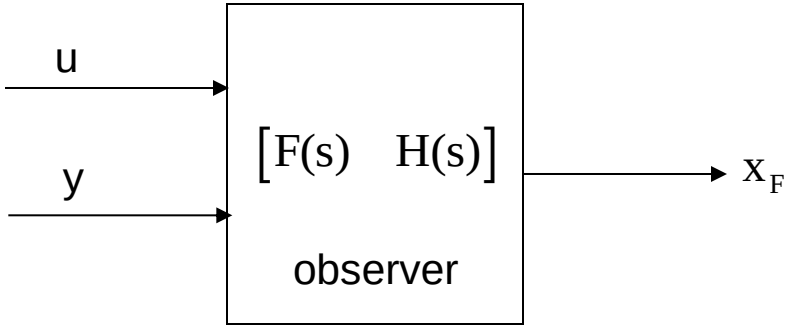

Problem to be solved: find $F(s), H(s) \in RH_\infty$

$$\text{s.t. } \lim_{t\to\infty}\left(Fx(t) - x_F(t)\right) = 0$$

7.2 Solution (answer to the question):

- Condition $\lim_{t\to\infty}\left(Px(t)-x_P(t)\right)=0$ is satisfied if and only if

$$Px(s)=F(s)u(s)+H(s)y(s) \Leftrightarrow P(sI-A)^{-1}Bu(s)=F(s)u(s)+H(s)\left(D+C(sI-A)^{-1}B\right)u(s)$$

- Do the following coprime factorisations

$$\left(D+C(sI-A)^{-1}B\right)=N(s)M^{-1}(s),$$

$$P(sI-A)^{-1}B=P(sI-A-BF)^{-1}B\left(I+F(sI-A-BF)^{-1}B\right)^{-1}=P(sI-A-BF)^{-1}BM^{-1}(s)$$

and substitute it into

$$P(sI-A)^{-1}Bu(s)=F(s)u(s)+H(s)\left(D+C(sI-A)^{-1}B\right)u(s)\Rightarrow$$

$$\left(P(sI-A-BF)^{-1}BM^{-1}(s)-F(s)-H(s)N(s)M^{-1}(s)\right)u(s)=0$$

- This gives us the condition (answer to the question):

$$P(sI-A-BF)^{-1}B=F(s)M(s)+H(s)N(s)$$

A further question: how can *F(s),H(s)* satisfying the above condition be analytically expressed?

An alternative way to find the condition:

$$P(sI - A - BF)^{-1}B = F(s)M(s) + H(s)N(s)$$

Analytical solution of *F(s),H(s)* satisfying

$$P(sI - A - BF)^{-1}B = F(s)M(s) + H(s)N(s)$$

is parameterised by

$$F(s) = P(sI - A - BF)^{-1}BX(s) - Q_o(s)\hat{N}(s), H(s) = P(sI - A - BF)^{-1}BY(s) + Q_o(s)\hat{M}(s)$$

where $Q_o(s)$ is called parametrisation matrix belonging to RH_∞

Check: Substituting the solution into

$$P(sI - A - BF)^{-1}B = F(s)M(s) + H(s)N(s)$$

gives

$$P(sI - A - BF)^{-1}B$$
$$= \left(P(sI - A - BF)^{-1}BX(s) - Q_o(s)\hat{N}(s)\right)M(s) + \left(P(sI - A - BF)^{-1}BY(s) + Q_o(s)\hat{M}(s)\right)N(s)$$

According to the Bezout-identity, we have

$$X(s)M(s) + Y(s)N(s) = I, -\hat{N}(s)M(s) + \hat{M}(s)N(s) = 0$$

And thus the result is proved.

7.3 Realisation of all observers

First, re-write the observer in the generalised form into the state-space form

$$x_F(s) = F(s)u(s) + H(s)y(s)$$

$$x_F(s) = \left(P(sI - A - BF)^{-1}BX(s) - Q_o(s)\hat{N}(s)\right)u(s) + \left(P(sI - A - BF)^{-1}BY(s) + Q_o(s)\hat{M}(s)\right)y(s)$$

$$\Rightarrow x_F(s) = P(sI - A - BF)^{-1}BX(s)u(s) + P(sI - A - BF)^{-1}BY(s)y(s) + Q_o(s)\left(\hat{M}(s)y(s) - \hat{N}(s)u(s)\right)$$

An interesting/important fact:

$$\hat{M}(s)y(s) - \hat{N}(s)u(s) = y(s) - \hat{y}(s)$$

is the error of the output estimation, which is also called residual signal, where the estimation for the output is achieved by an identity observer.

For our purpose, below we assume that P=F, the state feedback gain matrix.

This assumption loses no generality, since we can set

$$B \to \begin{bmatrix} B & 0 \end{bmatrix}, F \to \begin{bmatrix} F \\ F_0 \end{bmatrix} \in R^{n\times n}, \operatorname{rank}\begin{bmatrix} F \\ F_0 \end{bmatrix} = n$$

without changing system dynamics.

Any P can be then written as a map of the new “F”-matrix.

Bezout identity:

$$G(s) = N(s)M^{-1}(s) = \hat{M}^{-1}(s)\hat{N}(s)$$

$$\begin{bmatrix} X(s) & Y(s) \\ -\hat{N}(s) & \hat{M}(s) \end{bmatrix}\begin{bmatrix} M(s) & -\hat{Y}(s) \\ N(s) & \hat{X}(s) \end{bmatrix} = \begin{bmatrix} M(s) & -\hat{Y}(s) \\ N(s) & \hat{X}(s) \end{bmatrix}\begin{bmatrix} X(s) & Y(s) \\ -\hat{N}(s) & \hat{M}(s) \end{bmatrix} = \begin{bmatrix} I & O \\ O & I \end{bmatrix}$$

$$\begin{aligned}
x_F(s) &= \left(F(sI-A-BF)^{-1}BX(s) - Q_o(s)\hat{N}(s)\right)u(s) + \left(F(sI-A-BF)^{-1}BY(s) + Q_o(s)\hat{M}(s)\right)y(s) \\
&= \left(M(s)-I\right)X(s)u(s) + \left(M(s)-I\right)Y(s)y(s) + Q_o(s)\left(\hat{M}(s)y(s) - \hat{N}(s)u(s)\right) \\
&= F(sI-A+LC)^{-1}(B-LD)u(s) - Y(s)y(s) \\
&\quad + \left(M(s)X(s)-I\right)u(s) + M(s)Y(s)y(s) + Q_o(s)\left(\hat{M}(s)y(s) - \hat{N}(s)u(s)\right) \\
&= -\hat{Y}(s)\hat{N}(s)u(s) + \hat{Y}(s)\hat{M}(s)y(s) + Q_o(s)\left(\hat{M}(s)y(s) - \hat{N}(s)u(s)\right) \\
&\quad + F(sI-A+LC)^{-1}(B-LD)u(s) + F(sI-A+LC)^{-1}Ly(s)
\end{aligned}$$

The used relations:

$$X(s) = (A-LC, -(B-LD), F, I), Y(s) = (A-LC, -L, F, O)$$

$$\dot{\hat{x}} = A\hat{x} + Bu + L(y - C\hat{x} - Du),\ \hat{y} = C\hat{x} + Du$$

$$F(sI - A + LC)^{-1}(B - LD)u(s) + F(sI - A + LC)^{-1}Ly(s) = F\hat{x}(s)$$

$$\hat{M}(s)y(s) - \hat{N}(s)u(s) = y(s) - \hat{y}(s)$$

$$x_F(s) = F\hat{x}(s) + R(s)\big(y(s) - \hat{y}(s)\big),\ R(s) = Q_o(s) + \hat{Y}(s)$$

All observers can be written into the form of an identity observer
+ a correction (in terms of output estimation error – residual vector)!

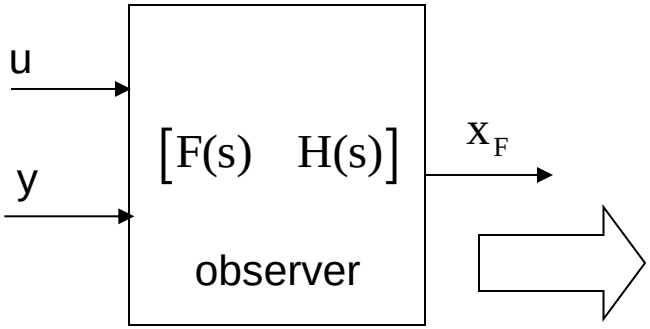

Parameterisation of all observers

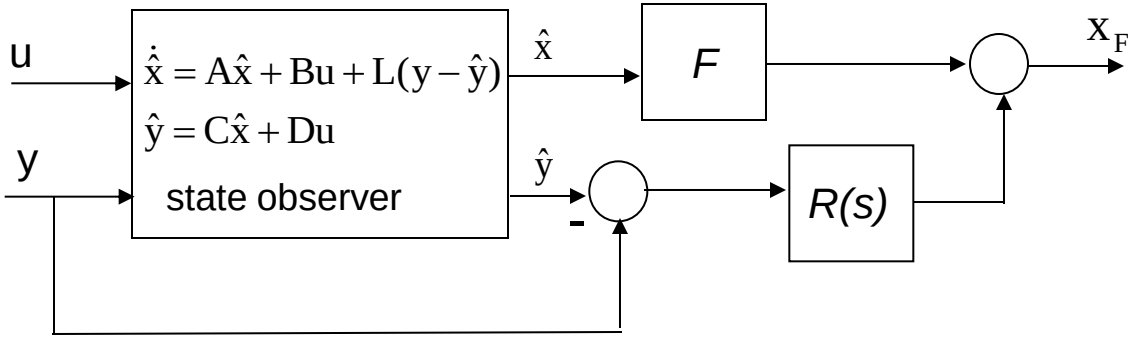

7.4 Observer and stabilization controller

The parametrisation of the (stabilisation) feedback controller

$$u(s) = K(s)y(s) = -(X - Q_C\hat{N})^{-1}(Y + Q_C\hat{M})y(s), \qquad Q_C \in RH_\infty$$

can be written into

$$(X - Q_C\hat{N})u(s) = -(Y + Q_C\hat{M})y(s) \Rightarrow$$

$$u(s) = F(sI - A + LC)^{-1}\left(B - LD\right)u(s) - Y(s)y(s) - Q_C\left(\hat{M}y(s) - \hat{N}u(s)\right) \Rightarrow$$

$$u(s) = F\hat{x}(s) + R(s)\left(\hat{M}(s)y(s) - \hat{N}(s)u(s)\right)$$

where

$$\dot{\hat{x}} = A\hat{x} + Bu + L(y - C\hat{x} - Du), \hat{y} = C\hat{x} + Du, R(s) = -Q_c(s)$$

That is:
u is an estimate for Fx(t)!
Every stabilisation feedback controller is an observer-based one!

8. Variations of the observer parameterization

8.1 Some relations

Given two observers,

$$\dot{\hat{x}}^1 = A\hat{x}^1 + Bu + L_1(y - C\hat{x}^1 - Du)$$

$$\dot{\hat{x}}^2 = A\hat{x}^2 + Bu + L_2(y - C\hat{x}^2 - Du)$$

then

$$F\hat{x}^1(s) = F\hat{x}^2(s) + F\left(\hat{x}^1(s) - \hat{x}^2(s)\right) = F\hat{x}^2(s) + R(s)r_2(s)$$

$$R(s) = F\left(sI - A + L_1C\right)^{-1}\left(L_1 - L_1\right)$$

$$r_2(s) = y - C\hat{x}^2 - Du$$

Outline of the proof:

$$\dot{\hat{x}}^1 - \dot{\hat{x}}^2 = A\left(\hat{x}^1 - \hat{x}^2\right) + L_1r_1 - L_2r_2 = \left(A - L_1C\right)\left(\hat{x}^1 - \hat{x}^2\right) + L_1r_2 - L_2r_2$$

$$\Rightarrow \hat{x}^1 - \hat{x}^2 = \left(sI - A + L_1C\right)^{-1}\left(L_1 - L_2\right)r_2$$

The influence of the observer design on the control performance can be „compensated“ by tuning the residual feedback.

For any

$$x_F(s) = F\hat{x}(s) + R(s)\left(y(s) - \hat{y}(s)\right)$$

$$\dot{\hat{x}} = A\hat{x} + Bu + L(y - C\hat{x} - Du),\ \hat{y} = C\hat{x} + Du$$

we have

$$x_F(s) = Fx(s) + \bar{R}(s)\left(y(s) - \hat{y}(s)\right)$$

$$\bar{R}(s) = R(s) + F\left(sI - A + L_1C\right)^{-1}\left(L - L_1\right)$$

where A-L_1C is stable

Outline of the proof:

$$x_F(s) = F\hat{x}(s) + R(s)\left(y(s) - \hat{y}(s)\right) = Fx(s) + F\left(\hat{x}(s) - x(s)\right) + R(s)\left(y(s) - \hat{y}(s)\right)$$

$$\dot{\hat{x}} - \dot{x} = A\left(\hat{x} - x\right) + L(y - C\hat{x} - Du) = \left(A - L_1C\right)\left(\hat{x} - x\right) + \left(L - L_1\right)(y - C\hat{x} - Du)$$

$$\Rightarrow F\left(\hat{x}(s) - x(s)\right) = F\left(sI - A + L_1C\right)^{-1}\left(L - L_1\right)r$$

8.2 Parameterisation of PI-observers and unknow input observers

Given

$$\dot{x} = Ax + Bu + E_d d, y = Cx + Du, d \approx \text{const.}$$

PI-observer:

$$\begin{bmatrix} \dot{\hat{x}} \\ \dot{\hat{d}} \end{bmatrix} = \begin{bmatrix} A & E_d \\ 0 & 0 \end{bmatrix} \begin{bmatrix} \hat{x} \\ \hat{d} \end{bmatrix} + \begin{bmatrix} B \\ 0 \end{bmatrix} u + \begin{bmatrix} L_1 \\ L_2 \end{bmatrix} (y - C\hat{x} - Du)$$

$$\Rightarrow \dot{\hat{x}} = A\hat{x} + Bu + L_1(y - C\hat{x} - Du) + E_d L_2 \int (y - C\hat{x} - Du)dt$$

If the system

$$\left(\begin{bmatrix} C & 0 \end{bmatrix}, \begin{bmatrix} A & E_d \\ 0 & 0 \end{bmatrix} \right)$$

is unobservable or even undetectable, then, the dynamics of the PI observer can become poor.

A more general form:

$$\begin{bmatrix} \dot{\hat{x}} \\ \dot{\hat{d}} \end{bmatrix} = \begin{bmatrix} A & E_d \\ 0 & A_d \end{bmatrix} \begin{bmatrix} \hat{x} \\ \hat{d} \end{bmatrix} + \begin{bmatrix} B \\ 0 \end{bmatrix} u + \begin{bmatrix} L_1 \\ L_2 \end{bmatrix} (y - C\hat{x} - Du)$$

A_d can be selected so that $\left(\begin{bmatrix} C & 0 \end{bmatrix}, \begin{bmatrix} A & E_d \\ 0 & A_d \end{bmatrix} \right)$ is observerable

An alternative way of dealing with the estimation issue

Given $\dot{x} = Ax + Bu + E_d d, y = Cx + Du, d \approx \text{const.}$

$$\dot{\hat{x}} = A\hat{x} + Bu + L(y - C\hat{x} - Du)$$

Then $\dot{e} = \left(A - LC\right)e + E_d d, r = y - C\hat{x} - Du = Ce \Rightarrow$

$$r(s) = C\left(sI - A + LC\right)^{-1} E_d d(s)$$

The residual r is the information carrier of d, and thus d can be estimated by

$$\hat{d}(s) = R(s)r(s) = R(s)C\left(sI - A + LC\right)^{-1} E_d d(s)$$

$$R(s)C\left(sI - A + LC\right)^{-1} E_d \to I$$

A new observer:

$$\dot{\hat{x}} = A\hat{x} + Bu + L(y - C\hat{x} - Du) + E_d\hat{d} \Rightarrow$$

$$\hat{x}(s) = \left(sI - A + LC\right)^{-1}\left(\left(B - LD\right)u(s) + Ly(s) + E_d R(s)C\left(sI - A + LC\right)^{-1} E_d d(s)\right)$$

$$= \left(sI - A + LC\right)^{-1}\left(\left(B - LD\right)u(s) + Ly(s) + E_d R(s)r(s)\right)$$

$$= \hat{x}_0(s) + Q(s)r(s), \hat{x}_0(s) = \left(sI - A + LC\right)^{-1}\left(\left(B - LD\right)u(s) + Ly(s)\right)$$

$$Q(s) = \left(sI - A + LC\right)^{-1} E_d R(s)$$

Any unknown input (state) observers can be parameterised by

$$\dot{\hat{x}}_0 = A\hat{x}_0 + Bu + L(y - C\hat{x}_0 - Du)$$

$$\hat{x}(s) = \hat{x}_0(s) + Q(s)r(s), Q(s) = \left(sI - A + LC\right)^{-1} E_d R(s), r = y - C\hat{x} - Du$$

$$\text{A (full) order observer + feedback of residual}$$

- It is an observer, according to the parameterisation of observers
- For some constant R(s)=V, it can be written as

$$\dot{\hat{x}} = A\hat{x} + Bu + L(y - C\hat{x} - Du) + E_d V(y - C\hat{x} - Du)$$

$$= A\hat{x} + Bu + L^*(y - C\hat{x} - Du), L^* = L + E_d V$$

Recall Kalman-filter or see also the discussion on H_2 observer

- For any dynamic R(s), it can be written as a higher order or an augmented observer

Let

$$R(s) = \left(A_R, B_R, C_R, D_R\right)$$

with the state vector x_R

The state space realisation of the observer is given by

$$\begin{bmatrix} \dot{\hat{x}} \\ \dot{x}_R \end{bmatrix} = \begin{bmatrix} A & E_d C_R \\ 0 & A_R \end{bmatrix} \begin{bmatrix} \hat{x} \\ x_R \end{bmatrix} + \begin{bmatrix} B \\ 0 \end{bmatrix} u + \begin{bmatrix} \bar{L} \\ B_R \end{bmatrix} (y - C\hat{x} - Du), \bar{L} = L + E_d D_R$$

$$\hat{d} = C_R x_R + D_R (y - C\hat{x} - Du)$$

It is a state space form of all unknown input observer or disturbance observers.

Discussion on disturbance obsever based control

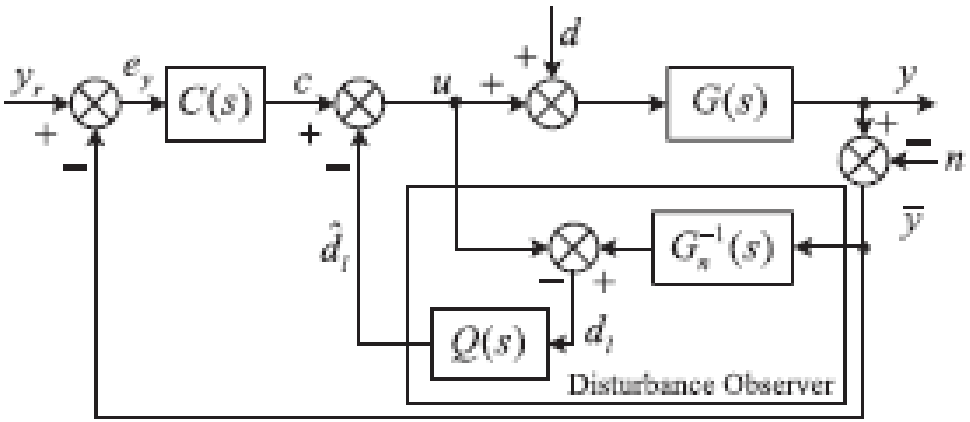

Fig. 1. Conceptual diagram of DOBC.

IEEE TRANSACTIONS ON INDUSTRIAL ELECTRONICS, VOL. 63, NO. 2, FEBRUARY 2016 1083

Disturbance-Observer-Based Control and Related Methods—An Overview

Wen-Hua Chen, *Senior Member, IEEE*, Jun Yang, *Member, IEEE*, Lei Guo, and Shihua Li, *Senior Member, IEEE*

Part 3: System analysis, controller design and design tools

9. Norms of signals and systems

Consider a system

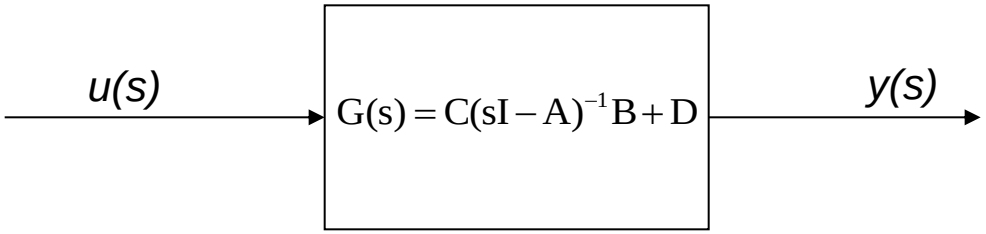

Two topics to be addressed:

- How to evaluate the “size” of a scalar or a vector-valued signal?
- How to evaluate the “size” of a transfer function (matrix)?

9.1 Norms of scalar signals

Introducing norms to build a basis for the comparison of different types of signals

- Peak magnitude, $L_\infty - \text{norm}$

$$\|f\|_\infty := \sup_{t \in R} |f(t)|$$

- Energy level, $L_2 - \text{norm}$

$$\|f\|_2 := \left(\int_{-\infty}^{\infty} f^2(t)dt \right)^{1/2} = \left(\frac{1}{2\pi} \int_{-\infty}^{\infty} |f(j\omega)|^2 d\omega \right)^{1/2}$$

f should be square-integrable.

Some of signals has $L_\infty - \text{norm}$ but not $L_2 - \text{norm}$

Example: step function $\sigma(t)$

Could any function of a signal be a norm?

Four essential properties of a norm:

- $\|f\| \geq 0$
- $\|f\| = 0 \text{ iff } f = 0$
- $\|cf\| = |c|\|f\|, c \text{ is some constant (real or complex)}$
- $\|f_1 + f_2\| \leq \|f_1\| + \|f_2\|$

Example: proving the above four properties for $L_\infty, L_2 - \text{norms}$

9.2 Norms of vector-valued signals

Given $f \in R^n$, i.e. $f(t) = \begin{bmatrix} f_1(t) \\ \vdots \\ f_n(t) \end{bmatrix}$

- $L_\infty - \text{norm}$

$$\|f\|_\infty := \sup_{t \in R} \max_i |f_i(t)|$$

The maximum value among all the components and considering overall time interval.

- $L_2 - \text{norm}$

$$\|f\|_2 := \left(\int_{-\infty}^{\infty} f^T(t) f(t) dt \right)^{1/2} = \left(\frac{1}{2\pi} \int_{-\infty}^{\infty} f^T(-j\omega) f(j\omega) d\omega \right)^{1/2}$$

Total energy contained in the signal

- $H_2 - \text{norm}$

$$f \in C^n, \text{i.e. } f(s) = \begin{bmatrix} f_1(s) \\ \vdots \\ f_n(s) \end{bmatrix}$$

$$\|f(s)\|_2 := \left(\sup_{\sigma>0} \frac{1}{2\pi} \int_{-\infty}^{\infty} f^T(-\sigma - j\omega) f(\sigma + j\omega) d\omega \right)^{1/2}$$

$$\|f(s)\|_2 = \|f(j\omega)\|_2 = \left(\frac{1}{2\pi} \int_{-\infty}^{\infty} f^T(-j\omega) f(j\omega) d\omega \right)^{1/2}$$

B.A. Francis, A course in H_inf control theory, Springer, 1987

9.3 Induced system norms

Consider a system

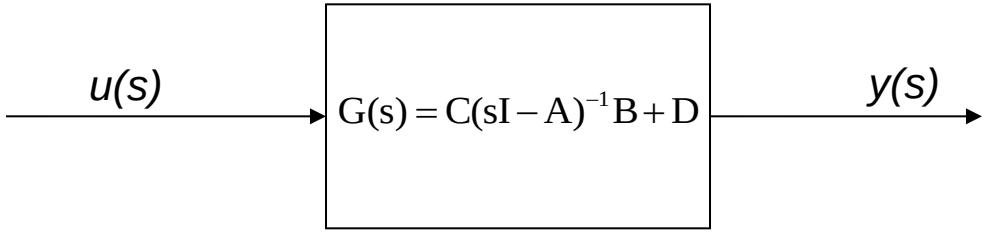

Address the question:

If the “size” of the input signal is known, how large the “size” of the output signal could be?

- For different measurements of the input and output signals, the system “gain” can also be different;
- The “gain” is the measurement of the max. possible output for the normed input;
- The norms of the input signal and the output signal could be different.

- Both input and output signals are measured by $L_2 - \text{norm}$

Definition of the induced system norm (gain):

$$\|G\| = \sup_{u \neq 0} \frac{\|y\|_2}{\|u\|_2} = \sup_{\|u\|_2 = 1} \|y\|_2$$

$\|G\|$ is the maximum possible gain (amplification) of the energy transfer.

It will be denoted by $\|G\|_\infty$ and is called $H_\infty - \text{norm}$ of system *G.*

$$\|G\|_\infty = \sup_{u \neq 0} \frac{\|y\|_2}{\|u\|_2} = \sup_{u \neq 0} \frac{\left(\frac{1}{2\pi} \int_{-\infty}^{\infty} u^T(-j\omega) G^T(-j\omega) G(j\omega) u(j\omega) d\omega \right)^{1/2}}{\left(\frac{1}{2\pi} \int_{-\infty}^{\infty} u^T(-j\omega) u(j\omega) d\omega \right)^{1/2}}$$

$$\because \forall \omega, G^T(-j\omega) G(j\omega) \leq \max_\omega \bar{\sigma}^2(G(j\omega)) I,$$

$$\therefore \left(\int_{-\infty}^{\infty} u^T(-j\omega) G^T(-j\omega) G(j\omega) u(j\omega) d\omega \right)^{1/2} \leq \max_\omega \bar{\sigma}(G(j\omega)) \left(\int_{-\infty}^{\infty} u^T(-j\omega) u(j\omega) d\omega \right)^{1/2}$$

$$\Rightarrow \|G\|_\infty = \sup_{u \neq 0} \frac{\|y\|_2}{\|u\|_2} \leq \max_\omega \bar{\sigma}(G(j\omega)) \Rightarrow \|G\|_\infty = \max_\omega \bar{\sigma}(G(j\omega))$$

$\bar{\sigma}(G(j\omega))$ is the maximum singular value of $G(j\omega)$ i.e.

$$\bar{\sigma}\left(G(j\omega)\right) = \lambda_{max}^{1/2}\left(G^T(-j\omega)G(j\omega)\right) := \max_i \left\{\lambda_i^{1/2}\left(G^T(-j\omega)G(j\omega)\right)\right\}$$

In case that *G* is an SISO system,

$$\bar{\sigma}(G(j\omega)) = \left|G(j\omega)\right|$$

$$\bar{\sigma}\left(G(j\omega)\right) = \left\|G(s)\right\|_\infty = \sup_{u\neq 0} \frac{\left\|y(s)\right\|_2}{\left\|u(s)\right\|_2} = \sup_{\|u\|_2=1} \left\|y(s)\right\|_2$$

B.A. Francis, A course in H_inf control theory, Springer, 1987

- Both input and output signals are measured by $L_\infty - \text{norm}$

Definition of the induced system norm (gain):

$$\|G\| = \sup_{u \neq 0} \frac{\|y\|_\infty}{\|u\|_\infty} = \sup_{\|u\|_\infty = 1} \|y\|_\infty$$

$\|G\|$ is the maximum possible gain (amplification) of the peak of u(t).

It will be denoted by $\|G\|_{peak}$ and is called peak-norm of the *G.*

- The input signal is measured by $L_2 - \text{norm}$, while the output by $L_\infty - \text{norm}$

Definition of the induced system norm (gain):

$$\|G\| = \sup_{u \neq 0} \frac{\|y\|_\infty}{\|u\|_2} = \sup_{\|u\|_2 = 1} \|y\|_\infty$$

$\|G\|$ Measures the maximum possible peak of the output caused by Input signal with unit energy level.

It will be denoted by $\|G\|_g$ and is called generalised $H_2 - \text{norm}$ of system *G.*

9.4 H_2-Norm of a system

Given $G(s) \in C^{m \times l}$. H_2-Norm of G is defined by

$$\|G\|_2 := \left(\frac{1}{2\pi} \int_{-\infty}^{\infty} \mathrm{tr}\left(G(j\omega) G^T(-j\omega) \right) d\omega \right)^{1/2}$$

where

$$\mathrm{tr}(T) = \sum_{i=1}^{n} t_{ii}, T = \begin{bmatrix} t_{11} & \cdots & t_{1n} \\ \vdots & \ddots & \vdots \\ t_{n1} & \cdots & t_{nn} \end{bmatrix}$$

H_2 norm can be interpreted as the RMS value of the output *y(k)* when the system is driven by the independent zero mean white noise with unit power spectral densities.

According to Parseval‘s theorem we have

$$\|G\|_2 := \left(\frac{1}{2\pi} \int_{-\infty}^{\infty} \mathrm{tr}\left(G(j\omega) G^T(-j\omega) \right) d\omega \right)^{1/2} = \left(\int_{-\infty}^{\infty} \mathrm{tr}\left(G(t) G^T(t) \right) dt \right)^{1/2}$$

9.5 Computation of system norms

- Computation of H_2-norm

Given $G(s) = C(sI - A)^{-1}B,$ where A is stable. Then,

$$\|G\|_2^2 = \mathrm{tr}\left(CL_cC^T\right) = \mathrm{tr}\left(B^TL_oB\right), \text{ where}$$

$$L_o = \int_0^\infty e^{A^Tt}C^TCe^{At}dt, L_c = \int_0^\infty e^{At}BB^Te^{A^Tt}dt$$

L_c,L_o can be calculated by solving Lyapunov equations

$$AL_c + L_cA^T + BB^T = 0, A^TL_o + L_oA + C^TC = 0$$

Example: prove the above conclusion

- H_2-norm is an indicator of the system "control and estimation ability"

Recall

$$\underline{x}(t) = \underline{e}^{A(t-t_0)}\underline{x}(t_0) + \int_{t_0}^{t} \underline{e}^{A(t-\tau)}\underline{B}\underline{u}(\tau)d\tau$$

Suppose that at t=t1,

$$\underline{x}(t_1) = x^*$$

should be reached.

Applying

$$\underline{u}^*(\tau) = \left(\underline{e}^{A(t_1-\tau)}\underline{B}\right)^T \underbrace{\left(\int_{t_0}^{t_1} \underline{e}^{A(t_1-\tau)}\underline{B}\left(\underline{e}^{A(t_1-\tau)}\underline{B}\right)^T d\tau\right)^{-1}}_{L_{c,[t_0,t_1]}^{-1}} \left(x^* - \underline{e}^{A(t_1-t_0)}\underline{x}(t_0)\right)$$

ensures $\underline{x}(t_1) = x^*$

$$\int_{t_0}^{t_1} \underline{e}^{A(t_1-\tau)}\underline{B}\left(\underline{e}^{A(t_1-\tau)}\underline{B}\right)^T d\tau = -\int_{t_1-t_0}^{0} \underline{e}^{At}\underline{B}\left(\underline{e}^{At}\underline{B}\right)^T d\tau = \int_{0}^{t_1-t_0} \underline{e}^{At}\underline{B}\left(\underline{e}^{At}\underline{B}\right)^T d\tau$$

$$t_1 \to \infty \Rightarrow \int_0^{\infty} \underline{e}^{At}\underline{B}\left(\underline{e}^{At}\underline{B}\right)^T d\tau = L_c$$

$$\text{For } \underline{x}(t_0)=0 \Rightarrow \underline{u}^*(\tau)=\left(\underline{e}^{A(t_1-\tau)}\underline{B}\right)^T \underbrace{\left(\int_{t_0}^{t_1}\underline{e}^{A(t_1-\tau)}\underline{B}\left(\underline{e}^{A(t_1-\tau)}\underline{B}\right)^T d\tau\right)^{-1}}_{L_{c,[t_0,t_1]}^{-1}} x^*$$

$$\left\|\underline{u}^*(t)\right\|_{2,[t_0,t_1]}^2=\int_{t_0}^{t_1}u^{*T}(\tau)u^*(\tau)d\tau=\left(x^*\right)L_{c,[t_0,t_1]}^{-1}x^*$$

And it is proved (ref. Mehrgrößenregelung, Section 5.8)

$$\left\|\underline{u}^*(t)\right\|_{2,[t_0,t_1]}^2=\min_{u,x(t_1)=x^*}\left\|\underline{u}(t)\right\|_{2,[t_0,t_1]}^2$$

For a larger L_c, less control energy is needed to reach the final goal (state)

A larger L_c in case of tracking control → enhanced controllability

A larger L_c in case of disturbance rejection → stronger influences of disturbances

Study using operator theory

$$\Gamma : L_2 \to R^n : \Gamma(u) = \int_{t_0}^{t_1} \underline{e}^{A(t-\tau)} \underline{Bu}(\tau) d\tau = x(t_1) \text{ is an operator}$$

Inner product in the L_2 space (signal space)

$$\langle x, y \rangle := \int_{t_0}^{t_1} x^T(\tau) y(\tau) d\tau$$

Adjoint operator of $\Gamma : \Gamma^* : R^n \to L_2$

$$\langle x, \Gamma(u) \rangle_{R^n} = \langle \Gamma^*(x), u \rangle_{L_2} \Rightarrow x^T \int_{t_0}^{t_1} \underline{e}^{A(t_1-\tau)} \underline{Bu}(\tau) d\tau = \int_{t_0}^{t_1} \left(\Gamma^*(x)\right)^T u(\tau) d\tau$$

$$\Rightarrow \Gamma^*(x) = B^T e^{A^T(t_1-t)} x \Rightarrow \Gamma^* = B^T e^{A^T(t_1-t)}$$

F. M. Callier and Ch. A. Desoer, Linear system theory, Springer, 1991

The controllability problem can be re-formulated as

Given $x(t_1) = x^*$, find $u(t)$ so that $\Gamma\left(u\right) = \int_{t_0}^{t_1} \underline{e}^{A(t_1-\tau)} \underline{B}\underline{u}(\tau) d\tau = x^*$

Among all possible solutions, the least squares solution is the one with minimum (L_2) norm

The LS solution

$$\underline{u}^*(t) = \Gamma^* \left(\Gamma\Gamma^*\right)^{-1} x^*$$

$$= \left(\underline{e}^{A(t_1-t)} \underline{B}\right)^T \left(\int_{t_0}^{t_1} \underline{e}^{A(t_1-\tau)} \underline{B} \left(\underline{e}^{A(t_1-\tau)} \underline{B}\right)^T d\tau\right)^{-1} x^*$$

Let u(t)=0,

$$\underline{y}(t) = \underline{C}\underline{e}^{A(t-t_0)}\underline{x}(t_0)$$

then

$$\|y\|_{2,,[t_0,t_1]}^2 = \int_{t_0}^{t_1} y^T y d\tau = x_0^T \underbrace{\int_{t_0}^{t_1} \left(\underline{C}\underline{e}^{A(\tau-t_0)}\right)^T \underline{C}\underline{e}^{A(\tau-t_0)} d\tau}_{L_{o,[t_0,t_1]}} x_0$$

A larger L_o results in a stronger influence of the initial condition on the L_2 norm of the measurement→ better for estimation

$$\left(\int_{t_0}^{t_1} \left(\underline{C}\underline{e}^{A(\tau-t_0)}\right)^T \underline{C}\underline{e}^{A(\tau-t_0)} d\tau\right)^{-1} \int_{t_0}^{t_1} \left(\underline{C}\underline{e}^{A(\tau-t_0)}\right)^T y d\tau = \underline{x}(t_0)$$

Enhanced robustness against e.g. noise.

Task: solve the same problem using operator theory.

A numerical solution: linear matrix inequality (LMI) method

Outline of the basic idea:

For any *L>0* satisfying

$$AL + LA^T + BB^T < 0$$

we have

$$L > L_c, AL_c + L_c A^T + BB^T = 0$$

$$\Rightarrow \|G\|_2^2 = \mathrm{tr}\left(CL_c C^T\right) \le \mathrm{tr}\left(CLC^T\right) = \gamma$$

$$\|G\|_2^2 \le \min_{L>0} \operatorname{tr}\left(CLC^T\right) = \min_{L>0} \gamma \text{ subject to } AL + LA^T + BB^T < 0$$

Computation of $\|G\|_2$ using an iterative algorithm

Step 0: set γ

Step 1: solving $AL_k + L_kA^T + BB^T < 0, \operatorname{tr}(CL_kC^T) < \gamma$ for *L*

Step 2: decreasing γ and go to Step 1

Solution of $\mathrm{AL} + \mathrm{LA}^{\mathrm{T}} + \mathrm{BB}^{\mathrm{T}} < 0, \mathrm{tr}(\mathrm{CLC}^{\mathrm{T}}) < \gamma$

can be replaced by the following LMI's

$$\begin{bmatrix} A^T P + PA & PB \\ B^T P & -I \end{bmatrix} < 0, \begin{bmatrix} P & C^T \\ C & Q \end{bmatrix} > 0, tr(Q) < \gamma$$

Why LMI?

There exist powerful algorithms for the computation of LMI's

Software tools are available: e.g. MATLAB LMI toolbox

Computation of $\|G\|_2$ using an iterative (LMI) algorithm

Step 0: set γ and tolerance

Step 1: solving the above-given LMI's for *P>0 and Q>0*

Step 2: Stop if the tolerance is reached, otherwise,
decreasing γ and go to Step 1

- Computation of H_∞-norm

$H_{infinity}$-norm can only be computed in an iterative way

Given $$G(s) = D + C(sI - A)^{-1}B$$

Then $$\|G\|_\infty < \gamma \text{ iff } \bar{\sigma}(\mathrm{D}) < \gamma$$

and matrix *H* has no eigenvalues on the imaginary axis, where

$$H = \begin{bmatrix} A + BR^{-1}D^T C & BR^{-1}B^T \\ -C^T(I + DR^{-1}D^T)C & -(A + BR^{-1}D^T C)^T \end{bmatrix}, R = \gamma^2 I - D^T D$$

Alternative solution using LMI-technique:

$\|G\|_\infty < \gamma$ iff there exists a symmetric P s.t.

$$\begin{bmatrix} A^T P + PA & PB & C^T \\ B^T P & -\gamma I & D^T \\ C & D & -\gamma I \end{bmatrix} < 0, P > 0$$

Example: Prove the system is stable if the above LMI's hold.

- Computation of generalised $\mathrm{H}_2 - \mathrm{norm}$

$$\|\mathrm{G}\|_{\mathrm{g}} = \sup_{\mathrm{u}\neq 0} \frac{\|\mathrm{y}\|_\infty}{\|\mathrm{u}\|_2} = \sup_{\|\mathrm{u}\|_2=1} \|\mathrm{y}\|_\infty = \sup\left\{ \|\mathrm{y}\|_\infty : \mathrm{x}(0)=0, \int_0^{\mathrm{T}} \|\mathrm{u}\|^2 \,\mathrm{dt} \leq 1 \right\}$$

$\|G\|_g < \gamma$ if and only if there exists a symmetric *P* satisfying

$$\begin{bmatrix} A^T P + PA & PB \\ B^T P & -I \end{bmatrix} < 0, \begin{bmatrix} P & C^T \\ C & \gamma^2 I \end{bmatrix} > 0$$

Generalised H_2-norm can only be computed in an iterative way

Outline of the proof of the sufficiency:

- State space description of the system

$$\dot{x} = Ax + Bu, y = Cx$$

- Define a Lyapunov function:

$$V(x) = x^T Px, P > 0$$

- Consider

$$\frac{d}{dt}\big(V(x)\big) - u^T u < 0 \Rightarrow V(x) - \int_0^T u^T u dt < 0 \Leftrightarrow x^T Px - \int_0^T u^T u dt < 0$$

- Since if $y^T y = x^T C^T C x,$ then

$$C^T C < \gamma^2 P \Rightarrow y^T y = x^T C^T C x < \gamma^2 x^T P x < \gamma^2 V(x(t))$$

- Finally,

$$\|y\|^2 = y^T y < \gamma^2 V(x(t)) < \gamma^2 \int_0^T \|u(t)\|^2 \, dt \Rightarrow \|G\|_g < \gamma$$

- Expression of the two conditions in terms of LMI's

$$\frac{d}{dt}\big(V(x)\big) - u^T u < 0, C^T C < \gamma^2 P$$

$$\frac{d}{dt}\left(V(x)\right)-u^T u=\dot{x}^T Px+x^T P\dot{x}-u^T u=$$

$$\left(Ax+Bu\right)^T Px+x^T P\left(Ax+Bu\right)-u^T u=x^T\left(A^T P+PA\right)x+u^T B^T Px+x^T PBu-u^T u$$

$$=\begin{bmatrix} x^T & u^T \end{bmatrix}\begin{bmatrix} A^T P+PA & PB \\ B^T P & -I \end{bmatrix}\begin{bmatrix} x \\ u \end{bmatrix}\Rightarrow$$

$$\frac{d}{dt}\left(V(x)\right)-u^T u<0\Rightarrow\begin{bmatrix} A^T P+PA & PB \\ B^T P & -I \end{bmatrix}<0$$

$$\begin{bmatrix} P & C^T \\ C & \gamma^2 I \end{bmatrix}>0\Leftrightarrow\begin{bmatrix} \gamma I & -\gamma^{-1}C^T \\ 0 & I \end{bmatrix}\begin{bmatrix} P & C^T \\ C & \gamma^2 I \end{bmatrix}\begin{bmatrix} \gamma I & -\gamma^{-1}C^T \\ 0 & I \end{bmatrix}^T>0$$

$$\begin{bmatrix} \gamma I & -\gamma^{-1}C^T \\ 0 & I \end{bmatrix}\begin{bmatrix} P & C^T \\ C & \gamma^2 I \end{bmatrix}\begin{bmatrix} \gamma I & -\gamma^{-1}C^T \\ 0 & I \end{bmatrix}^T=\begin{bmatrix} \gamma^2 P-C^T C & 0 \\ 0 & \gamma^2 I \end{bmatrix}$$

$$\therefore\begin{bmatrix} P & C^T \\ C & \gamma^2 I \end{bmatrix}>0\Leftrightarrow\gamma^2 P-C^T C>0$$

Schur complement: Given matrix

$$\underline{A} = \begin{bmatrix} \underline{A}_{11} & \underline{A}_{12} \\ \underline{A}_{21} & \underline{A}_{22} \end{bmatrix}, \underline{A}_{11} \text{ is nonsingular,then}$$

$$\begin{bmatrix} \underline{A}_{11} & \underline{A}_{12} \\ \underline{A}_{21} & \underline{A}_{22} \end{bmatrix} = \begin{bmatrix} \underline{I} & \underline{0} \\ \underline{A}_{21}\underline{A}_{11}^{-1} & \underline{I} \end{bmatrix} \begin{bmatrix} \underline{A}_{11} & \underline{0} \\ \underline{0} & \underline{\Delta} \end{bmatrix} \begin{bmatrix} \underline{I} & \underline{A}_{11}^{-1}\underline{A}_{12} \\ \underline{0} & \underline{I} \end{bmatrix}, \underline{\Delta} = \underline{A}_{22} - \underline{A}_{21}\underline{A}_{11}^{-1}\underline{A}_{12}$$

$$\text{thus } \begin{bmatrix} \underline{A}_{11} & \underline{A}_{12} \\ \underline{A}_{21} & \underline{A}_{22} \end{bmatrix} > 0 \Leftrightarrow \underline{\Delta} > 0, \underline{A}_{11} > 0$$

$\underline{\Delta}$ is called Schur complement of $\underline{A}_{11}$

10. Optimal H_2 controller design

10.1 Standard LQR (linear quadratic regulator) problem

Problem formulation: Given system

$$\dot{x} = Ax + Bu, x(0) = x_0 \text{ given but arbitrary}$$

$$z = Cx + Du, x \in R^n, u \in R^p, z \in R^m$$

and suppose that

(A1) *(A,B)* is stabilisable

(A2) (C,A) is detectable

(A3) *D* has full column rank and $\begin{bmatrix} D^T \\ D_o^T \end{bmatrix} \begin{bmatrix} D & D_o \end{bmatrix} = \begin{bmatrix} I & 0 \\ 0 & I \end{bmatrix}$

(A4)

$$\forall \omega, rank \begin{bmatrix} A - j\omega I & B \\ C & D \end{bmatrix} = n + p$$

Find an optimal control law *u* such that $\|z\|_2^2$ is minimised.

Consider a state feedback controller (regulator)

$$u = Kx$$

Dynamics of the closed-loop:

$$\dot{x} = (A + BK)x, z = (C + DK)x, x(0) = x_0$$

i.e. the dynamics of the system only depends on the initial condition, which can be equivalently written into

$$\dot{x} = (A + BK)x + x_0\delta(t), z = (C + DK)x, x(0_) = 0 \Rightarrow$$

$$z(s) = (C + DK)\left(sI - A - BK\right)^{-1} x_0 \Rightarrow$$

$$\|z\|_2 = \|G_C x_0\|_2, G_C(s) = (C + DK)\left(sI - A - BK\right)^{-1}$$

If the closed-loop is stable, then

$$\|z\|_2^2 = \|G_C x_0\|_2^2 = x_0^T X x_0, A_K^T X + XA_K + C_K^T C_K = 0$$

$$C_K = C + DK, A_K = A + BK$$

Outline of the solution

- Consider a special control law

$$K = -(B^T X + D^T C),$$

$$(A - BD^T C)^T X + X(A - BD^T C) - XBB^T X + C^T D_o D_o^T C = 0$$

- X solves the following Lyapunov equation

$$(A - BD^T C)^T X + X(A - BD^T C) - XBB^T X + C^T D_o D_o^T C = 0$$

$$\Leftrightarrow (A + BK)^T X + X(A + BK) + XBB^T X + C^T D_o D_o^T C = 0$$

$$\Leftrightarrow (A + BK)^T X + X(A + BK) + C_K^T C_K = 0$$

thus, the closed-system is stable

- Is the state feedback scheme, $u=Kx$, the optimal solution?

Let $u = v + Kx \Rightarrow$

$$\frac{d}{dt}\left(x^T Xx\right) = \dot{x}^T Xx + x^T X\dot{x} = x^T (A_K^T X + XA_K)x + 2x^T XBv$$

$$= -x^T C_K^T C_K x + 2x^T XBv$$

$$= -\left(C_K x + Dv\right)^T \left(C_K x + Dv\right) + v^T v + 2x^T C_K^T Dv + 2x^T XBv$$

Note that

$$C_K^T D = (C + DK)^T D = C^T D + K^T = -XB$$

$$\frac{d}{dt}\left(x^T Xx\right) = -\left(C_K x + Dv\right)^T \left(C_K x + Dv\right) + v^T v = -\|z\|^2 + \|v\|^2 \Rightarrow$$

$$\int_0^\infty \frac{d}{dt}\left(x^T Xx\right) dt = \int_0^\infty (-\|z\|^2 + \|v\|^2) dt \Rightarrow \|z\|_2^2 = x_0^T Xx_0 + \|v\|_2^2$$

As a result: $v = 0 \Leftrightarrow u = Kx \Rightarrow \|z\|_2^2 = \min$

10.2 LQR, inner, inner-outer factorization, lossless and optimisation

An observation (as motivation)

$$\int_0^\infty (-\|z\|^2 + \|v\|^2)dt = x_0^T X x_0 \Rightarrow \|z\|_2^2 = \|v\|_2^2, \text{ for } x_0 = 0$$

$$\dot{x} = (A + BK)x + Bv, z = (C + DK)x + Dv \Rightarrow$$

$$z(s) = \underbrace{\left((C + DK)\left(sI - A - BK\right)^{-1} B + D\right)}_{G_{zv}(s)} v(s)$$

$$\|z\|_2 = \|G_{zv} v\|_2 = \|v\|_2 \Rightarrow$$

$$\int_{-\infty}^{\infty} z^T(-j\omega)z(j\omega)d\omega = \int_{-\infty}^{\infty} v^T(-j\omega)G_{zv}^T(-j\omega)G_{zv}(j\omega)v(j\omega)d\omega = \int_{-\infty}^{\infty} v^T(-j\omega)v(j\omega)d\omega$$

$$\Rightarrow G_{zv}^T(-j\omega)G_{zv}(j\omega) = I$$

A transfer matrix G is called inner, if

$$G^T(-j\omega)G(j\omega) = I, G(s) \in RH_\infty$$

On inner transfer matrix

$$G^T(-j\omega)G(j\omega) = I, G(s) \in RH_\infty$$

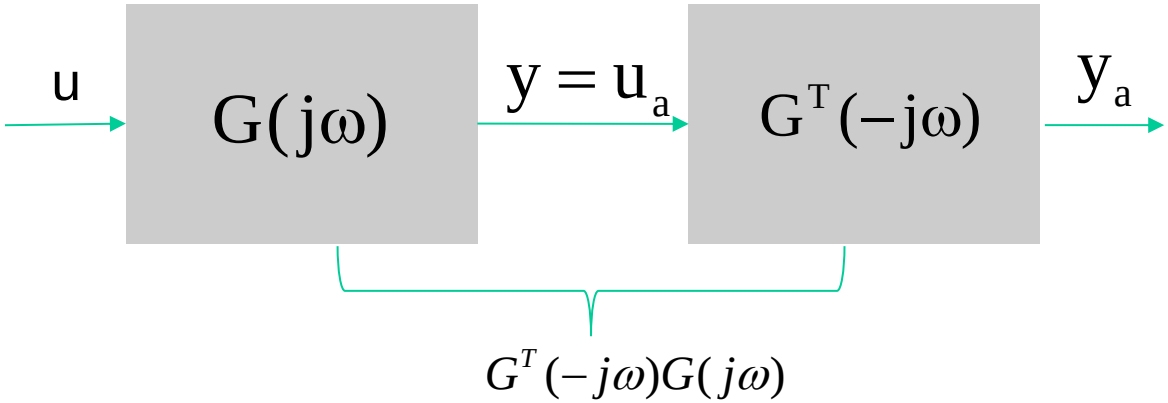

G is inner iff

$$G^T(-j\omega)G(j\omega) = I \Leftrightarrow u = y_a$$

$$G(j\omega) = C\left(sI - A\right)^{-1} B + D \Rightarrow G^T(-j\omega) = D^T - B^T\left(sI - \left(-A^T\right)\right)^{-1} C^T \text{ : conjungate}$$

$$G^T(-j\omega)G(j\omega) = \left[\begin{array}{cc|c} A & 0 & B \\ -C^T C & -A^T & -C^T D \\ \hline D^T C & B^T & D^T D \end{array}\right]$$

By a state transformation

$$T=\begin{bmatrix} I & 0 \\ -X & I \end{bmatrix} \Rightarrow T^{-1}=\begin{bmatrix} I & 0 \\ X & I \end{bmatrix}, X = X^T$$

$$G^T(-j\omega)G(j\omega)=\left[\begin{array}{cc:c} A & 0 & B \\ -\left(A^T X + XA + C^T C\right) & -A^T & -\left(XB + C^T D\right) \\ \hdashline \left(XB + C^T D\right)^T & B^T & D^T D \end{array}\right]$$

Thus,

$$A^T X + XA + C^T C = 0, B^T X + D^T C = 0, D^T D = I \Rightarrow G^T(-j\omega)G(j\omega) = I$$

The closed-loop dynamics with the LQ controller:

$$G_{zv}(s) = (C + DK)\left(sI - A - BK\right)^{-1} B + D, K = -(B^T X + D^T C)$$

$$(A - BD^T C)^T X + X(A - BD^T C) - XBB^T X + C^T D_o D_o^T C = 0$$

$$\Rightarrow (A + BK)^T X + X(A + BK) + C_K^T C_K = 0$$

$$B^T X + D^T C_K = B^T X + D^T C + D^T DK = 0, D^T D = I$$

It is inner!

Inner-outer factorization:

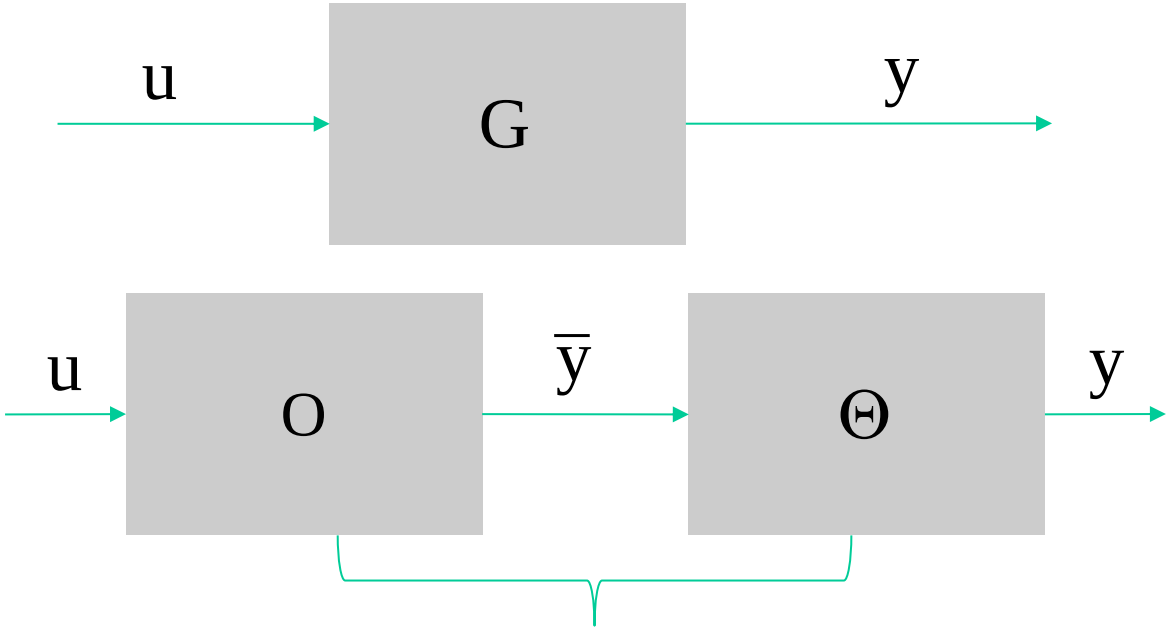

$$G = \Theta(s)O(s)$$

$$\|y\|_2 = \|\bar{y}\|_2$$

Θ is inner (lossless)

O is outer, invertible over RH_∞

Given

$$\dot{x} = Ax + Bu, x(0) = x_0$$

$$y = Cx + Du, x \in R^n, u \in R^r, y \in R^m$$

and suppose that

(A1) *(A,B)* is stabilisable

(A2) (C,A) is detectable

(A3) *D* has full column rank and $D^T D = R > 0$

(A4) $$\forall \omega, rank \begin{bmatrix} A - j\omega I & B \\ C & D \end{bmatrix} = n + r$$

Then, the following RCF is an inner-outer factorization

$$y = Gu = NM^{-1}u : \begin{cases} u = Mv, & M = (A + BF, BR^{-1/2}, F, R^{-1/2}) \\ y = Nv, & N = (A + BF, B, C + DF, DR^{-1/2}) \end{cases}$$

$$F = -R^{-1}\left(B^T X + D^T C\right)$$

F is the LQ controller (for R=I).

Feedback control scheme

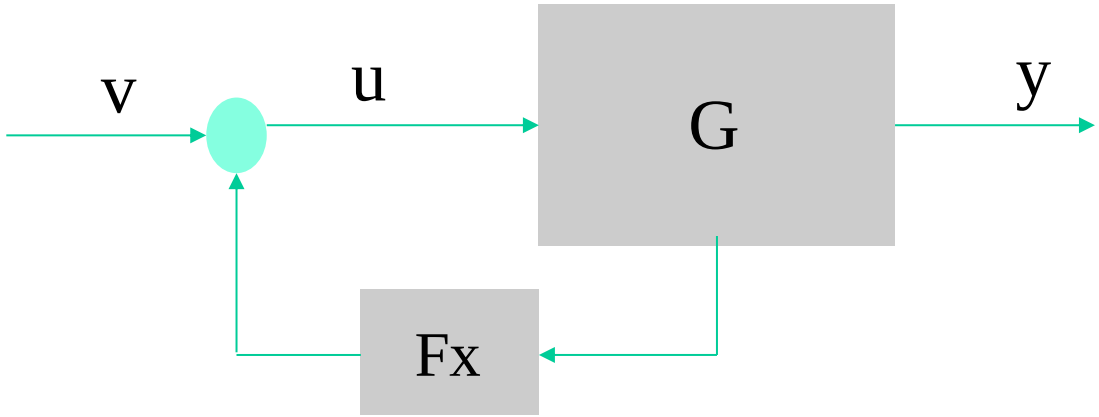

Feed-forward control scheme

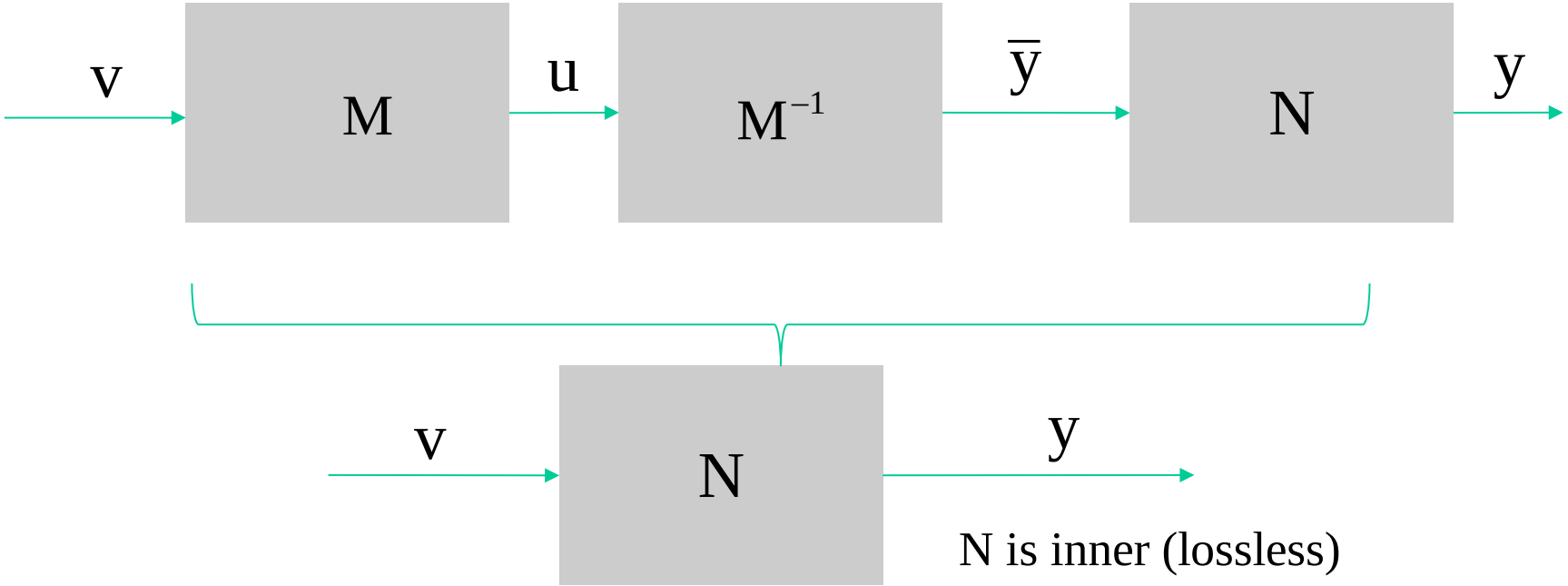

Hamilton function, Hamilton system (canonical system) and optimization

Recall the LQ optimization problem

$$\frac{1}{2}\|y\|_2^2 \text{ is minimised (z is replaced by y)} \Leftrightarrow \min_u \int_0^\infty y^T(t)y(t)dt$$

The existence conditions for the solution

$$\dot{p} = -\frac{\partial H}{\partial x}, \dot{x} = \frac{\partial H}{\partial p}, \text{control condition: } \frac{\partial H}{\partial u} = 0$$

$$H(x,p,u) = p^T\left(Ax+Bu\right) + \frac{1}{2}y^T y = p^T\left(Ax+Bu\right) + \frac{1}{2}\left(Cx+Du\right)^T\left(Cx+Du\right)$$

ref. - Lecture Notes on Nonlinear control systems.
- Lecture Notes on Advanced control system theory.

Hamilton function, Hamilton system (canonical system) and optimization (cont'd)

$$\dot{x} = \frac{\partial H}{\partial p} \Rightarrow \dot{x} = Ax + Bu, y = Cx + Du, x \in R^n, u \in R^r, y \in R^m$$

$$\Leftrightarrow G(j\omega) = C\left(sI - A\right)^{-1} B + D$$

$$\dot{p} = -\frac{\partial H}{\partial x} \Rightarrow \dot{p} = -A^T p - C^T\left(Cx + Du\right) = -A^T p - C^T u_a, u_a = y$$

$$y_a = \frac{\partial H}{\partial u} \Rightarrow y_a = B^T p + D^T\left(Cx + Du\right) = B^T p + D^T u_a$$

$$\Leftrightarrow G^T(-j\omega) = D^T - B^T\left(sI - \left(-A^T\right)\right)^{-1} C^T$$

$$\frac{\partial H}{\partial u} = 0 \Rightarrow B^T p + D^T u_a = 0 \Rightarrow u = -B^T p - D^T Cx = -\left(B^T X + D^T C\right)x$$

$$\left(p = Xx\right)$$

p is called co-state vector.

Lossless, Hamilton function and inner

Define Laypunov function

$$V(x) = x^T X x$$

It holds

$$\dot{V}(x) + y^T y = \dot{x}^T X x + x^T X \dot{x} + \left(Cx + Du\right)^T \left(Cx + Du\right)$$

$$= \left(\left(A + BK\right)x + Bv\right)^T Xx + x^T X \left(\left(A + BK\right)x + Bv\right) + \left(C_k x + Dv\right)^T \left(C_k x + Dv\right)$$

$$= v^T v$$

$$\dot{V}(x) + y^T y = v^T v \Leftrightarrow V\left(x\left(t_1\right)\right) - V\left(x\left(t_0\right)\right) = \int_{t_0}^{t_1} \left(v^T v - y^T y\right) dt$$

Such a system is called lossless (ref. Lecture Notes on Nonlinear control systems).

An interesting (and fascinating from the system point of view) fact:

As the cost function is minimized, the (closed-loop) system becomes lossless (no loss of energy) – mostly "economic" operation

Lossless, Hamilton function and inner (cont'd)

Note that for

$$V(x) = \frac{1}{2} x^T X x$$

$$\dot{V}(x) + \frac{1}{2} y^T y = \frac{1}{2} v^T v \Leftrightarrow V\left(x\left(t_1\right)\right) - V\left(x\left(t_0\right)\right) = \int_{t_0}^{t_1} \left(\frac{1}{2} v^T v - \frac{1}{2} y^T y \right) dt$$

$$\text{Let } p = \frac{\partial V(x)}{\partial x}$$

$$H(x, p, u) = p^T \left(Ax + Bu\right) + \frac{1}{2} y^T y = \frac{\partial V(x)}{\partial x} \dot{x} + \frac{1}{2} y^T y = \frac{1}{2} v^T v$$

Thus, Hamilton function provides us with a tool to study the energy balance in the system.

Summary

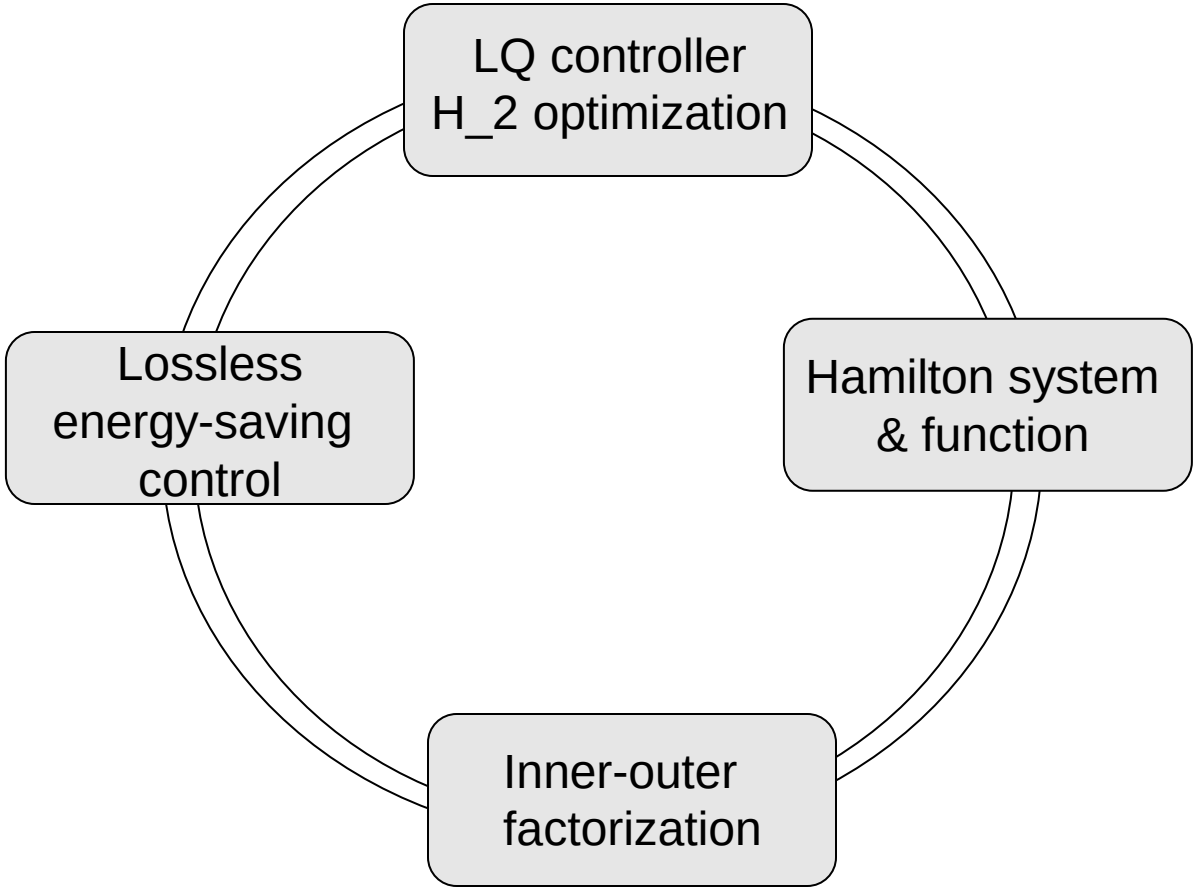
LQ controller
H_2 optimization
Hamilton system
& function
Inner-outer
factorization
Lossless
energy-saving
control

10.3 Standard H_2 problem

Problem formulation: Given system

$$G: \quad \begin{aligned} \dot{x} &= Ax + Bu + Ed \\ y &= Cx + Fd \\ z &= C_z x + Du \end{aligned}$$

Assumptions on the system:

(A1) *(A,B)* is stabilisable

(A2) (C,A) is detectable

(A3) *D* has full column rank and $\begin{bmatrix} D^T \\ D_o^T \end{bmatrix} \begin{bmatrix} D & D_o \end{bmatrix} = \begin{bmatrix} I & 0 \\ 0 & I \end{bmatrix}$

(A4) *F* has full row rank and

$$\begin{bmatrix} F \\ F_o \end{bmatrix} \begin{bmatrix} F^T & F_o^T \end{bmatrix} = \begin{bmatrix} I & 0 \\ 0 & I \end{bmatrix}$$

(A5) $$\forall \omega, rank \begin{bmatrix} A - j\omega I & B \\ C_z & D \end{bmatrix} = n + r$$

(A6) $$\forall \omega, rank \begin{bmatrix} A - j\omega I & E \\ C & F \end{bmatrix} = n + m$$

Find an optimal control law *u* such that

$$\|G_{zd}\|_2 \text{ is minimised.}$$

Structure of the control loop:

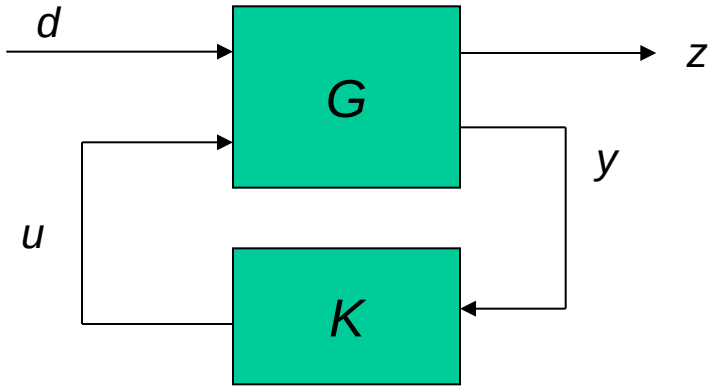

Solution:

$$K_{opt}(s) = -K_2(sI - A_2)^{-1} L_2$$

$$A_2 = A + BK_2 + L_2 C$$

$$\min \|G_{zd}\|_2^2 = \|G_c E\|_2^2 + \|K_2 G_o\|_2^2 = \|G_c L_2\|_2^2 + \|C_z G_o\|_2^2$$

where

$$G_c(s) = \left(C_z + DK_2\right)\left(sI - A - BK_2\right)^{-1}$$

$$G_o(s) = \left(sI - A - L_2 C\right)^{-1}(E + L_2 F)$$

$$K_2 = -(B^T X + D^T C_z),$$

$$(A - BD^T C_z)^T X + X(A - BD^T C_z) - XBB^T X + C_z{}^T D_o D_o^T C_z = 0$$

$$L_2 = -(YC^T + EF^T)$$

$$(A - C^T FE^T)^T Y + Y(A - C^T FE^T) - YC^T CY + EF_o^T F_o E^T = 0$$

Discussion and outline of the proof of the results:

- Structure of the controller

$$K_{opt}(s) = -K_2(sI - A_2)^{-1}L_2, A_2 = A + BK_2 + L_2C$$

can be re-written as, by introducing a state vector

$$\dot{\hat{x}} = A\hat{x} + Bu + L_2(C\hat{x} - y), u = K_2\hat{x}$$

It is an observer and an observer based state feedback!

- Define a new control variable

$$v = u - K_2 x = -K_2(x - \hat{x}) \Leftrightarrow u = K_2 x + v = K_2 x - K_2(x - \hat{x})$$

- Find the relationship between the control output *z*, *d* and *v*

$$\dot{x} = Ax + Bu + Ed, z = C_z x + Du \Rightarrow$$

$$\dot{x} = (A + BK_2)x + Bv + Ed, z = (C_z + DK_2)x + Dv \Rightarrow$$

$$z(s) = (C_z + DK_2)(sI - A - BK_2)^{-1}(Bv + Ed) + Dv$$

$$= G_c(s)Ed + U(s)v, U(s) = (C_z + DK_2)(sI - A - BK_2)^{-1}B + D$$

- Relationship between *v* and *d*

$$v = -K_2(x - \hat{x}) := -K_2 e, \dot{\hat{x}} = A\hat{x} + Bu + L_2(C\hat{x} - y) \Rightarrow$$

$$\dot{e} = (A + L_2 C)e + (E + L_2 F)d \Rightarrow G_{vd}(s) = -K_2 G_o(s)$$

- A useful relation

$$z(s) = G_c(s)Ed + U(s)v(s) \Rightarrow z(s) = \left(G_c(s)E + U(s)G_{vd}(s)\right)d$$

Discussion of the two sub-optimization problems

$$\min \left\| G_c E \right\|_2^2 , \min \left\| U G_{vd} \right\|_2^2$$

- Solution of the first optimisation problem is similar to the LQG problem

$$\min \left\| G_c E \right\|_2^2 \Rightarrow \quad K_2 = -(B^T X + D^T C_z),$$

$$(A - BD^T C_z)^T X + X(A - BD^T C_z) - XBB^T X + C_z{}^T D_o D_o^T C_z = 0$$

- Using the known result that *U(s)* is inner, i.e.

$$\text{for } K_2 = -(B^T X + D^T C_z) \text{ with}$$

$$(A - BD^T C_z)^T X + X(A - BD^T C_z) - XBB^T X + C_z{}^T D_o D_o^T C_z = 0$$

$$U^T(-s)U(s) = I$$

- Consider

$$\|UG_{vd}\|_2^2 = \frac{1}{2\pi}\int_{-\infty}^{\infty} tr\left(U(j\omega)G_{vd}(j\omega)G_{vd}{}^T(-j\omega)U^T(-j\omega)\right)d\omega$$

$$= \frac{1}{2\pi}\int_{-\infty}^{\infty} tr\left(G_{vd}{}^T(-j\omega)U^T(-j\omega)U(j\omega)G_{vd}(j\omega)\right)d\omega$$

$$= \frac{1}{2\pi}\int_{-\infty}^{\infty} tr\left(G_{vd}{}^T(-j\omega)G_{vd}(j\omega)\right)d\omega = \|G_{vd}\|_2^2 \Rightarrow$$

$$\min\|UG_{vd}\|_2^2 = \min\|G_{vd}\|_2^2$$

- Solution of the above optimisation problem, e.g. using duality

$$\|K_2G_o(s)\|_2^2 = \|G_o^T(s)K_2^T\|_2^2$$

$$\min\|G_{vd}\|_2^2 = \min\|K_2G_o(s)\|_2^2 = \min\|G_o^T(s)K_2^T\|_2^2$$

$$= \min_{L_2}\left\|K_2\left(sI - A - L_2C\right)^{-1}(E + L_2F)\right\|_2^2$$

$$= \min_{L_2}\left\|(E^T + F^TL_2^T)\left(sI - A^T - C^TL_2^T\right)^{-1}K_2^T\right\|_2^2$$

- A further useful result: If *U(s)* is inner, then

$$\|G_{zd}\|_2^2 = \|G_c(s)E + U(s)G_{vd}(s)\|_2^2 = \|U^{-1}(s)G_c(s)E + G_{vd}(s)\|_2^2$$

$$U^T(-s)U(s) = I \Rightarrow U^{-1}(s) = U^T(-s)$$

$$U(s) = (A+BK_2, B, C_z + DK_2, D) \Rightarrow U^{-1}(s) = \left(-(A+BK_2)^T, -(C_z+DK_2)^T, B^T, D^T\right)$$

$$G_c(s)E = (A+BK_2, E, C_z+DK_2, 0) \Rightarrow$$

$$U^{-1}(s)G_c(s)E = \left(\begin{bmatrix} -(A+BK_2)^T & -(C_z+DK_2)^T(C_z+DK_2) \\ 0 & A+BK_2 \end{bmatrix}, \begin{bmatrix} 0 \\ E \end{bmatrix}, \begin{bmatrix} B^T & D^T(C_z+DK_2) \end{bmatrix}, 0\right)$$

$$\begin{bmatrix} I & -X \\ 0 & I \end{bmatrix}\begin{bmatrix} -(A+BK_2)^T & -(C_z+DK_2)^T(C_z+DK_2) \\ 0 & A+BK_2 \end{bmatrix}\begin{bmatrix} I & X \\ 0 & I \end{bmatrix} = \begin{bmatrix} -(A+BK_2)^T & 0 \\ 0 & A+BK_2 \end{bmatrix}$$

$$\begin{bmatrix} I & -X \\ 0 & I \end{bmatrix}\begin{bmatrix} 0 \\ E \end{bmatrix} = \begin{bmatrix} -X \\ I \end{bmatrix}E, \begin{bmatrix} B^T & D^T(C_z+DK_2) \end{bmatrix}\begin{bmatrix} I & X \\ 0 & I \end{bmatrix} = \begin{bmatrix} B^T & 0 \end{bmatrix} \Rightarrow U^{-1}(s)G_c(s)E \in \mathbf{RH}_2^{\perp}$$

subspace of unstable system

$$U^T(-s)G_c(s)E \in \mathbf{RH}_2^{\perp},\ G_{vd} \in \mathbf{RH}_2 \text{ are orthogonal} \Rightarrow$$

$$\|G_{zd}\|_2^2 = \|G_cE\|_2^2 + \|UG_{vd}\|_2^2 \Rightarrow \min\|G_{zd}\|_2^2 = \min\|G_cE\|_2^2 + \min\|UG_{vd}\|_2^2$$

Final result:

$$\min \|G_{zd}\|_2^2 = \min \|G_c E\|_2^2 + \min \|U G_{vd}\|_2^2$$
$$= \|G_c E\|_2^2 + \|K_2 G_o\|_2^2$$

Separation principle:

The H_2 optimal controllers is the composition of

- an H_2 optimal observer
- an LQ- (H_2 -) optimal state feedback controller

Solution:

$$K_{opt}(s) = -K_2(sI - A_2)^{-1}L_2$$

$$A_2 = A + BK_2 + L_2C$$

$$\min\|G_{zd}\|_2^2 = \|G_cE\|_2^2 + \|K_2G_o\|_2^2 = \|G_cL_2\|_2^2 + \|C_zG_o\|_2^2$$

An alternative proof:

$$\dot{\hat{x}} = A\hat{x} + Bu + L_2(C\hat{x} - y), u = K_2\hat{x} \Rightarrow$$

$$z = C_zx + Du = C_k\hat{x} + C_ze, C_k = C_z + DK_2$$

$$z(s) = G_c(s)L_2\left(-Ce(s) - Fd(s)\right) + C_zG_o(s)d(s)$$

$$Ce(s) + Fd(s) = \hat{U}(s)d(s), \hat{U}(s) = C(sI - A - L_2C)^{-1}\left(E + L_2F\right) + F$$

$\hat{U}(s)$ is a co-inner: $\hat{U}(s)\hat{U}^T(-s) = I$

$$G_{zd}(s) = G_c(s)L_2\hat{U}(s) + C_zG_o(s) \Rightarrow$$

$$\left\|G_c(s)L_2\hat{U}(s) + C_zG_o(s)\right\|_2^2 = \left\|G_c(s)L_2 + C_zG_o(s)\hat{U}^T(-s)\right\|_2^2$$

$$= \|G_c(s)L_2\|_2^2 + \|C_zG_o(s)\|_2^2$$

10.4 Discussions about H_2 control scheme

$$\min \|G_{zd}\|_2^2 = \|G_c E\|_2^2 + \|K_2 G_o\|_2^2 = \|G_c L_2\|_2^2 + \|C_z G_o\|_2^2$$

$$\min \|G_{zd}\|_2^2 = \|G_c E\|_2^2 + \|K_2 G_o\|_2^2$$

$$G_c(s) = \left(C_z + DK_2\right)\left(sI - A - BK_2\right)^{-1}, G_o(s) = \left(sI - A - L_2 C\right)^{-1}(E + L_2 F)$$

$$K_2 G_o : K_2 e(s) \Rightarrow u = K_2 \hat{x} = K_2 x + K_2 e$$

The control law, K_2x, is given. Improving the performance of estimating K_2x enhances the control performance.

Again: a feedback controller is an observer. The quality of the observer decides the control performance.

How to understand $\min \|G_{zd}\|_2^2 = \|G_c L_2\|_2^2 + \|C_z G_o\|_2^2$?

$$\dot{\hat{x}} = A\hat{x} + Bu + L_2(C\hat{x} - y)$$

$$L_2 = -(YC^T + EF^T)$$

$$(A - C^T FE^T)^T Y + Y(A - C^T FE^T) - YC^T CY + EF_o^T F_o E^T = 0$$

It is an H_2 optimal observer and residual generator
(the so-called unified solution)

$$\dot{\hat{x}} = A\hat{x} + Bu + E\hat{d} + YC^T(y - C\hat{x})$$

$$\hat{d} = F^T(y - C\hat{x}) \quad (y = Cx + Fd)$$

Reference:

Journal of Econometrics 118 (2004) 341–373

Deterministic least squares filtering

J.C. Willems*

Feedback control system model:

$$\dot{x}(t) = Ax(t) + Bu(t) + E_d d(t), y(t) = Cx(t) + Du(t) + F_d d(t)$$

$$u(s) = K(s)y(s) + v(s)$$

$$\dot{\hat{x}}(t) = A\hat{x}(t) + Bu(t) + L_2 r(t), \hat{y}(t) = C\hat{x}(t) + Du(t)$$

$$r(t) = y(t) - \hat{y}(t) \Rightarrow$$

$$y(t) = r(t) + \hat{y}(t), u(s) = F\hat{x}(s) + R(s)r(s) + V(s)v(s)$$

The unified model:

$$\boxed{\begin{gathered} \dot{\hat{x}}(t) = A\hat{x}(t) + Bu(t) + L_2\bar{d}(t), \left\|\bar{d}\right\|_2 = \left\|d\right\|_2 \\ \begin{bmatrix} y(t) \\ u(s) \\ r(t) \\ \bar{d}(t) \end{bmatrix} = \begin{bmatrix} C\hat{x}(t) + Du(t) + \bar{d}(t) \\ F\hat{x}(s) + R(s)\bar{d}(s) + V(s)v(s) \\ y(t) - C\hat{x}(t) - Du(t) \\ r(t) \end{bmatrix} \end{gathered}}$$

$$\min \|G_{zd}\|_2^2 = \|G_c L_2\|_2^2 + \|C_z G_o\|_2^2$$

$$G_c(s) = \left(C_z + DK_2\right)\left(sI - A - BK_2\right)^{-1}, G_o(s) = \left(sI - A - L_2 C\right)^{-1}(E + L_2 F)$$

$$\boxed{\begin{aligned} &\dot{\hat{x}}(t) = A\hat{x}(t) + Bu(t) + L_2\bar{d}(t), \|\bar{d}\|_2 = \|d\|_2 \\ &\begin{bmatrix} y(t) \\ u(s) \\ r(t) \\ \bar{d}(t) \end{bmatrix} = \begin{bmatrix} C\hat{x}(t) + Du(t) + \bar{d}(t) \\ F\hat{x}(s) + R(s)\bar{d}(s) + V(s)v(s) \\ y(t) - C\hat{x}(t) - Du(t) \\ r(t) \end{bmatrix} \end{aligned}}$$

$G_c L_2$: $\boxed{\dot{\hat{x}}(t) = A\hat{x}(t) + BK_2\hat{x}(t) + L_2\bar{d}(t), \hat{y}(t) = C_K\hat{x}(t)}$

Perfect control performance (independent of observer)

$C_z G_o = C_z e(s)$: Performance of the observer.

An extension to an optimal FTC solution

Problem formulation: Given system

$$G: \quad \begin{aligned} \dot{x} &= Ax + Bu + Ed + E_f f \\ y &= Cx + Fd + F_f f \\ z &= C_z x + Du \end{aligned}$$

Assumptions on the system:

(A1) *(A,B)* is stabilisable

(A2) (C,A) is detectable

(A3) *D* has full column rank and $\begin{bmatrix} D^T \\ D_o^T \end{bmatrix} \begin{bmatrix} D & D_o \end{bmatrix} = \begin{bmatrix} I & 0 \\ 0 & I \end{bmatrix}$

(A4) *F (F_f)* has full row rank and

$$\begin{bmatrix} F \\ F_o \end{bmatrix} \begin{bmatrix} F^T & F_o^T \end{bmatrix} = \begin{bmatrix} I & 0 \\ 0 & I \end{bmatrix}$$

(A5) $$\forall \omega, rank\begin{bmatrix} A - j\omega I & B \\ C_z & D \end{bmatrix} = n + r$$

(A6) $$\forall \omega, rank\begin{bmatrix} A - j\omega I & E \\ C & F \end{bmatrix} = n + m, rank\begin{bmatrix} A - j\omega I & E_f \\ C & F_f \end{bmatrix} = n + m$$

Find an optimal control law *u* such that

In fault-free operation: $\|G_{zd}\|_2 \to \min$, in faulty case: $\|G_{zf}\|_2 \to \min$

Structure of the control loop:

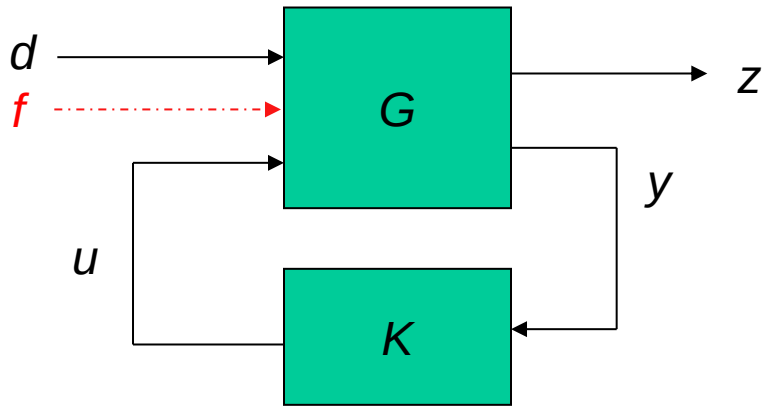

Solution:

$$K_{opt}(s) = -K_2(sI - A_2)^{-1}L_2, A_2 = A + BK_2 + L_2C$$

$$\dot{\hat{x}} = A\hat{x} + Bu + L_2(C\hat{x} - y) = A\hat{x} + Bu + L_0 r + E\hat{d} \text{ (or } E_f \hat{f}\text{)}, u = K_2\hat{x}$$

where $K_2 = -(B^T X + D^T C_z)$: independent of E, E_f

$$(A - BD^T C_z)^T X + X(A - BD^T C_z) - XBB^T X + C_z{}^T D_o D_o^T C_z = 0$$

State feedback gain is independent of disturbances and faults!

Why?

- E, F (information about disturbance) are only included in the observer design

$$\dot{\hat{x}} = A\hat{x} + Bu + L_2(C\hat{x} - y) = A\hat{x} + Bu + E\hat{d} + L_o r$$

$$u = K_2\hat{x}, \hat{d} = F^T r, L_o = YC^T, r = y - C\hat{x}$$

$L_2 = -(YC^T + EF^T)$ or switching to $L_2 = -(YC^T + E_f F_f^T)$

$$(A - C^T FE^T)^T Y + Y(A - C^T FE^T) - YC^T CY + EF_o^T F_o E^T = 0, E \to E_f, F \to F_f$$

Improvement of the observer performance (robustness against d) is very important.

The H_2 observer delivers the unified solution → best fault detection → an integrated design, and after switching, it delivers also an optimal fault estimation. In core, FTC is an estimation/detection problem.

10.5 H_2 control: a general solution

Outline of the idea for solving

$$\min_{Q\in RH_\infty} \|G_{zd}\|_2 = \min_{Q\in RH_\infty} \|T_1 - T_2 Q T_3\|_2$$

- inner-outer and co-inner-outer factorization

$$T_2 = T_{2i}T_{2o}, T_{2i}: \text{ inner}, T_{2i}^T(-s)T_{2i}(s) = I, T_{2o}\text{:outer, } T_{2o}^{-1} \in RH_\infty$$

$$T_3 = T_{3co}T_{3ci}, T_{3ci}: \text{ co-inner}, T_{3ci}(s)T_{3ci}^T(-s) = I, T_{3co}\text{:co-outer, } T_{3co}^{-1} \in RH_\infty$$

$$\min_{Q\in RH_\infty} \|T_1 - T_2 Q T_3\|_2 = \min_{Q\in RH_\infty} \left\|T_{2i}^T(-s)\left(T_1 - T_2 Q T_3\right)T_{3ci}^T(-s)\right\|_2$$

$$= \min_{Q\in RH_\infty} \left\|T_{2i}^T(-s)T_1T_{3ci}^T(-s) - \bar{Q}\right\|_2, Q = T_{2o}^{-1}\bar{Q}T_{3co}^{-1}$$

-

$$T := T_{2i}^T(-s)T_1T_{3ci}^T(-s) = T\left(H_2\right) + T(H_2^\perp) \Rightarrow$$

$$\bar{Q} = T\left(H_2\right)$$

Further results from the literature:

Theorem 2: The family of all admissible controllers such that $\| T_{zw} \|_2 < \gamma$ equals the set of all transfer matrices from y to u in

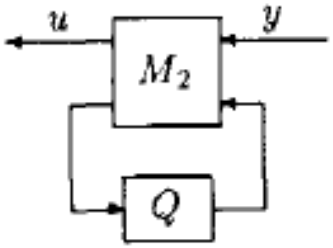

$$M_2(s) = \left[\begin{array}{c|cc} \hat{A}_2 & -L_2 & B_2 \\ \hline F_2 & 0 & I \\ -C_2 & I & 0 \end{array}\right]$$

where $Q \in \mathcal{RH}_2$, $\| Q \|_2^2 < \gamma^2 - (\| G_c B_1 \|_2^2 + \| F_2 G_f \|_2^2)$.

Thus, the suboptimal controllers are parametrized by a fixed (independent of γ) linear-fractional transformation with a free parameter Q. With $Q = 0$ we recover K_{opt}. It is worth noting that

J.C. Doyle et al., *State-Space Solutions to Standard H_2 and H_inf, Control Problems, IEEE Trans. AC,* VOL. 34, NO. **8,** pp.831-847, 1989

11. Optimal $H_{infnity}$ controller design

11.1 Problem formulation

Find an optimal control law *u(s)=K(s)y(s)* such that

$$\|G_{zd}\|_\infty < \gamma$$

Structure of the control loop:

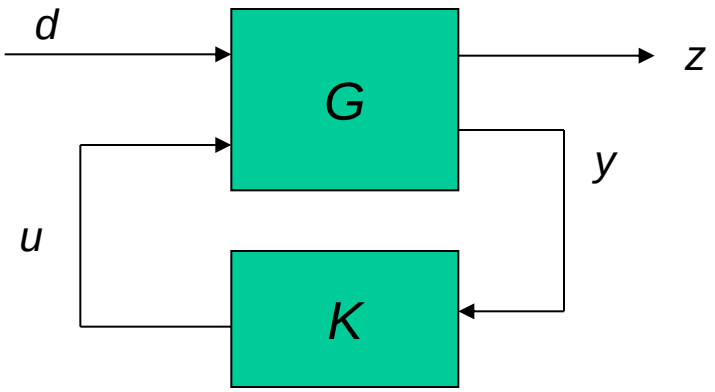

System model under consideration

$$G: \quad \begin{aligned} \dot{x} &= Ax + Bu + Ed \\ y &= Cx + Fd \\ z &= C_z x + Du \end{aligned}$$

Assumptions on the system:

(A1) *(A,B)* is stabilisable and (C_Z, A) is detectable

(A2) (A,E) is stabilisable and (C,A) is detectable

(A3) *D* has full column rank and $D^T \begin{bmatrix} C_z & D \end{bmatrix} = \begin{bmatrix} 0 & I \end{bmatrix}$

(A4) *F* has full row rank and

$$\begin{bmatrix} E \\ F \end{bmatrix} F^T = \begin{bmatrix} 0 \\ I \end{bmatrix}$$

11.2 Solution

$$K_{opt}(s) = -K_\infty (sI - A_\infty)^{-1} Z_\infty L_\infty$$

$$A_\infty = A + \gamma^{-2} EE^T X_\infty + BK_\infty + Z_\infty L_\infty C$$

where

$$K_\infty = -B^T X_\infty, L_\infty = -Y_\infty C^T, Z_\infty = (I - \gamma^{-2} Y_\infty X_\infty)$$

$$A^T X_\infty + X_\infty A + X_\infty (\gamma^{-2} EE^T - BB^T) X_\infty + C_z^T C_z = 0$$

$$Y_\infty A^T + AY_\infty + Y_\infty (\gamma^{-2} C_z^T C_z - C^T C) Y_\infty + EE^T = 0$$

$$X_\infty \geq 0, Y_\infty \geq 0$$

11.3 Study on the solution

What does the controller mean ? How to interpret the controller structure?

$$K_{opt}(s) = -K_\infty (sI - A_\infty)^{-1} Z_\infty L_\infty, A_\infty = A + \gamma^{-2} EE^T X_\infty + BK_\infty + Z_\infty L_\infty C \Rightarrow$$

$$\dot{\hat{x}} = A_\infty \hat{x} - Z_\infty L_\infty y, u = K_\infty \hat{x}, \Rightarrow \dot{\hat{x}} = \left(A + \gamma^{-2} EE^T X_\infty + BK_\infty + Z_\infty L_\infty C\right)\hat{x} - Z_\infty L_\infty y$$

$$\Rightarrow \dot{\hat{x}} = \left(A + \gamma^{-2} EE^T X_\infty + BK_\infty\right)\hat{x} + Z_\infty L_\infty \left(C\hat{x} - y\right)$$

$$u = K_\infty \hat{x}$$

Define:

$$\hat{d}_{worst} = \gamma^{-2} E^T X_\infty \hat{x} \Rightarrow$$

$$\dot{\hat{x}} = \left(A + BK_\infty\right)\hat{x} + E\hat{d}_{worst} + Z_\infty L_\infty \left(C\hat{x} - y\right)$$

- Why $\hat{d}_{worst}$? What does it mean?

Study on $\hat{d}_{worst} = \gamma^{-2} E^T X_\infty \hat{x}$ as well as the solution

We first assume that x is available (measured)

- Define Lyapunov function

$$V(x) = x^T X_\infty x$$

- Consider

$$\begin{aligned}\dot{V}(x) &= \dot{x}^T X_\infty x + x^T X_\infty \dot{x} \\ &= x^T \left(A^T X_\infty + X_\infty A \right) x + 2d^T E^T X_\infty x + 2u^T B^T X_\infty x\end{aligned}$$

- Since X_∞ solves the Riccati-equation

$$A^T X_\infty + X_\infty A + X_\infty (\gamma^{-2} EE^T - BB^T) X_\infty + C_z^T C_z = 0$$

we have

$$\dot{V}(x) = -x^T C_Z^T C_Z x - \gamma^{-2} x^T X_\infty EE^T X_\infty x + x^T X_\infty BB^T X_\infty x + 2d^T E^T X_\infty x + 2u^T B^T X_\infty x$$

- Note that

$$z = C_Z x + Du \Rightarrow z^T z = x^T C_Z^T C_Z x + u^T D^T Du$$

This leads to

$$\dot{V}(x) = -z^T z + \gamma^2 d^T d - \gamma^2 (d - \gamma^{-2} E X_\infty x)^T (d - \gamma^{-2} E X_\infty x) + (u + B^T X_\infty x)^T (u + B^T X_\infty x)$$

- Integrating the both sides of the above equation, and on the assumption

$$V(0) = 0\left(x(0) = 0\right),$$

gives

$$\|z\|_2^2 - \gamma^2 \|d\|_2^2 = \left\|u + B^T X_\infty x\right\|_2^2 - \gamma^2 \left\|d - \gamma^{-2} E^T X_\infty x\right\|_2^2 - V\left(x(\infty)\right)$$

$$\Rightarrow \|z\|_2^2 \le \gamma^2 \|d\|_2^2 + \left\|u + B^T X_\infty x\right\|_2^2 - \gamma^2 \left\|d - \gamma^{-2} E^T X_\infty x\right\|_2^2$$

- This shows that

$$d = \gamma^{-2} E^T X_\infty x \text{ is the worst-case, i.e.}$$

$$\|z\|_2^2 \le \gamma^2 \|d\|_2^2 + \left\|u + B^T X_\infty x\right\|_2^2 \text{ and}$$

$$\|z\|_2^2 < \gamma^2 \|d\|_2^2 + \left\|u + B^T X_\infty x\right\|_2^2 \quad \text{if } d \ne \gamma^{-2} E X_\infty x$$

also

$$u = -B^T X_\infty x \text{ would be the best solution if } x \text{ is known}$$

It can be learnt from this result that

- if the disturbance is a function of the state vector x, it can affect the system stability and results in poor system performance
- an H_inf observer should be, in fact, designed in the context of the worst case performance (caused by the disturbance), which is, as shown in the example, a function of the state vector x,
- and thus, in the context of (optimal) estimation, such an estimation makes less sense.

Further results from the literature:

Theorem 4: If conditions i)–iii) in Theorem 3 are satisfied, the set of all admissible controllers such that $\| T_{zw} \|_\infty < \gamma$ equals the set of all transfer matrices from y to u in

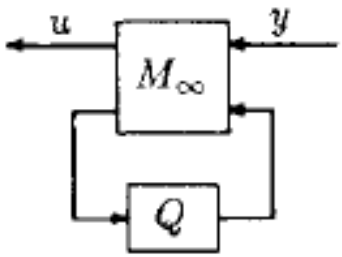

$$M_\infty(s) = \left[\begin{array}{c|cc} \hat{A}_\infty & -Z_\infty L_\infty & Z_\infty B_2 \\ \hline F_\infty & 0 & I \\ -C_2 & I & 0 \end{array}\right]$$

where $Q \in \mathcal{RH}_\infty$, $\| Q \|_\infty < \gamma$.

As in the $\mathcal{H}_2$ case, the suboptimal controllers are parametrized by a fixed linear-fractional transformation with a free parameter Q. With $Q = 0$ we recover the central controller $K_{sub}(s)$.

J.C. Doyle et al., *State-Space Solutions to Standard H_2 and H_inf, Control Problems, IEEE Trans. AC,* VOL. 34, NO. **8,** pp.831-847, 1989

12. LCF/RCF, Youla parameterization and optimal controllers

12.1 LCF/RCF and the associated matrices

$$M(s) = (A + BF, B, F, I)$$
$$N(s) = (A + BF, B, C + DF, D)$$
$$X(s) = (A - LC, -(B - LD), F, I)$$
$$Y(s) = (A - LC, -L, F, O)$$

$$\hat{M}(s) = (A - LC, -L, C, I)$$
$$\hat{N}(s) = (A - LC, B - LD, C, D)$$
$$\hat{X}(s) = (A + BF, L, C + DF, I)$$
$$\hat{Y}(s) = (A + BF, -L, F, O)$$

Youla parameterization:

$$K = -(\hat{Y} + MQ)(\hat{X} - NQ)^{-1} = -(X - Q\hat{N})^{-1}(Y + Q\hat{M}) \Rightarrow$$

The closed-loop (observer-based) form of the Youla parameterization:

$$u(z) = F_o \hat{x}(z) + Q_o(z)\left(\hat{y} - y\right)$$

Is it possible to recovery the same response (performance) using different feedback gain and parameterization matrix?

$$\exists F_1, Q_1(s), s.t.\ u(s) = F_o \hat{x}(s) + Q_o(s)\left(\hat{y} - y\right) = F_1 \hat{x}(s) + Q_1(s)\left(\hat{y} - y\right)?$$

$$RCF: M(z) = (A + BF, B, F, I), N(z) = (A + BF, B, C + DF, D)$$

$$LCF: \hat{M}(z) = (A - LC, -L, C, I), \hat{N}(z) = (A - LC, B - LD, C, D)$$

$$Given\ F_1, F_2 \Rightarrow M_1(z) = (A + BF_1, B, F_1, I), M_2(z) = (A + BF_2, B, F_2, I)$$

$$N_1(z) = (A + BF_1, B, C + DF_1, D), N_2(z) = (A + BF_2, B, C + DF_2, D)$$

$$M_2(z) = M_1(z)Q_{RCF}(z), N_2(z) = N_1(z)Q_{RCF}(z)$$

$$Q_{RCF}(z) = I + \left(F_2 - F_1\right)\left(zI - A - BF_2\right)^{-1} B$$

$$Given\ L_1, L_2 \Rightarrow \hat{M}_1(z) = (A - L_1C, -L_1, C, I), \hat{M}_2(z) = (A - L_2C, -L_2, C, I)$$

$$\hat{N}_1(z) = (A - L_1C, B - L_1D, C, D), \hat{N}_2(z) = (A - L_2C, B - L_2D, C, D)$$

$$\hat{M}_2(z) = Q_{LCF}(z)\hat{M}_1(z), \hat{N}_2(z) = Q_{LCF}(z)\hat{N}_1(z)$$

$$Q_{LCF}(z) = I - C\left(zI - A - L_2C\right)^{-1}(L_2 - L_1) \in RH_\infty$$

Right-coprime factorization (image representation)

$$\begin{bmatrix} u \\ y \end{bmatrix} = \begin{bmatrix} M \\ N \end{bmatrix} v \Rightarrow y = NM^{-1}u$$

$$\Rightarrow \begin{cases} \dot{x} = Ax + Bu \\ y = Cx + Du \end{cases} \xrightarrow{v := u - Fx} \begin{cases} \dot{x} = (A + BF)x + Bv \\ u = Fx + v \\ y = Cx + D(v + Fx) = (C + DF)x + Dv \end{cases}$$

Left-coprime factorization (kernel representation)

$$\hat{M}(s)y(s) - \hat{N}(s)u(s) = y - \hat{y} = r(s) : \begin{cases} \dot{e} = (A - LC)e, e = x - \hat{x} \\ r = y - \hat{y} = Ce \end{cases}$$

$$\Rightarrow \text{residual generator} \begin{cases} \dot{\hat{x}} = A\hat{x} + Bu + L(y - \hat{y}) \\ r = y - \hat{y} \end{cases} \Rightarrow y = \hat{M}^{-1}\hat{N}y = Gu$$

State feedback scheme: assume that Fo is the optimal feedback gain and associated with it $M_0(z) = (A + BF_o, B, F_o, I), N_o(z) = (A + BF_o, B, C + DF_o, D)$

For any F_1 and associated with it

$$\begin{bmatrix} u \\ y \end{bmatrix} = \begin{bmatrix} M_1 \\ N_1 \end{bmatrix} v = \begin{bmatrix} M_o \\ N_o \end{bmatrix} Q_{RCF}(z) v, Q_{RCF} \text{ is a filter of the reference signal}$$

Residual generation scheme: assume that Lo is the optimal observer gain and associated with it $\hat{M}_o(z) = (A - L_o C, -L_o, C, I), \hat{N}_o(z) = (A - L_o C, B - L_o D, C, D)$

For any L_1 and associated with it

$$r(s) = \hat{M}_1(s) y(s) - \hat{N}_1(s) u(s) = Q_{LCF}(s) \left(\hat{M}_o(s) y(s) - \hat{N}_o(s) u(s) \right)$$

Q_{LCF} is a filter of the measurement/residual

Motivating question: Does the system performance depend on the factorization(s) ?

Given

$$K_1 = -(\hat{Y}_1 + M_1 Q_1)(\hat{X}_1 - N_1 Q_1)^{-1}, Q_1 \in RH_\infty$$

$$M_1(z) = (A + BF_1, B, F_1, I), N_1(z) = (A + BF_1, B, C + DF_1, D)$$

$$\hat{Y}_1(z) = (A + BF_1, -L, F_1, O), \hat{X}_1(z) = (A + BF_1, L, C + DF_1, I)$$

and

$$M_2(z) = (A + BF_2, B, F_2, I), N_2(z) = (A + BF_2, B, C + DF_2, D)$$

$$\hat{Y}_2(z) = (A + BF_2, -L, F_2, O), \hat{X}_2(z) = (A + BF_2, L, C + DF_2, I)$$

There exists $Q_2 \in RH_\infty$ such that

$$\boxed{K_2 = -(\hat{Y}_2 + M_2 Q_2)(\hat{X}_2 - N_2 Q_2)^{-1} = K_1 = -(\hat{Y}_1 + M_1 Q_1)(\hat{X}_1 - N_1 Q_1)^{-1}}$$

12.2 Optimal tracking and estimation problems

Optimal tracking problem:

$$\min_{Q\in RH_\infty} \left\| I - T_2 Q \right\|_2 \text{ or } \min_{Q\in RH_\infty} \left\| I - T_2 Q \right\|_\infty$$

Optimal (fault) estimation problem

$$\min_{Q\in RH_\infty} \left\| I - Q T_3 \right\|_2 \text{ or } \min_{Q\in RH_\infty} \left\| I - Q T_3 \right\|_\infty$$

Solution of optimal estimation problems

Do a co-inner-outer factorization

$$T_3 = T_{3co} T_{3ci}, T_{3ci} : \text{ co-inner}, T_{3ci}(s) T_{3ci}^T(-s) = I, T_{3co}\text{:co-outer, } T_{3co}^{-1} \in RH_\infty$$

$$\min_{Q\in RH_\infty} \left\| T_1 - Q T_3 \right\|_2 = \min_{Q\in RH_\infty} \left\| T_{3ci}^T(-s) - \bar{Q} \right\|_2, Q = \bar{Q} T_{3co}^{-1}$$

If the system is of minimum phase (no zero in C_+ and at infinity), then

$$T_{3ci}^T(-s) = I \Rightarrow \bar{Q} = I \text{ and } \min_{Q\in RH_\infty} \left\| T_1 - Q T_3 \right\|_2 = 0$$

Otherwise,

$$T_{3ci}^{T}(-s)=\left(A_{ci},B_{ci},C_{ci},D_{ci}\right),D_{ci}D_{ci}^{T}=I\Rightarrow$$

$$\min_{Q\in RH_\infty}\left\|T_1-QT_3\right\|_2=\min_{Q\in RH_\infty}\left\|\tilde{T}_{3ci}^{T}(-s)\right\|_2,\tilde{T}_{3ci}^{T}(-s)=\left(A_{ci},B_{ci},C_{ci},0\right),\bar{Q}=D_{ci}$$

In the H_inf case, if the system is of minimum phase, then the solution is the same.

Otherwise, we have the following result.

Theorem 14.5 *Given $\bar{G}_f(s) \in \mathcal{RH}_\infty^{m\times k_f}$ which is non-minimum phase (having zeros in RHP and at infinity), then we have*

$$\min_R \|I - R(s)\bar{G}_f(s)\|_\infty = 1. \tag{14.20}$$

Proof: We begin with a co-inner-outer factorization of $\bar{G}_f(s) = G_{co}(s)G_{ci}(s)$ with $G_{co}(s)$ and $G_{ci}(s)$ denoting co-outer and co-inner of $\bar{G}_f(s)$ respectively. It results in

$$\|I - R(s)\bar{G}_f(s)\|_\infty = \|I - R(s)G_{co}(s)G_{ci}(s)\|_\infty$$

which further leads to

$$\min_R \|I - R(s)\bar{G}_f(s)\|_\infty = \min_R \|U(s) - R(s)G_{co}(s)\|_\infty \tag{14.21}$$

with $U(s) = G_{ci}^*(s)$. Note that

$$\min_R \|U(s) - R(s)G_{co}(s)\|_\infty \leq \|U(s)\|_\infty = 1. \tag{14.22}$$

S. X. Ding, Model-based fault diagnosis technique, 2nd edition, Springer, 2013

On the other hand,

$$\min_R \|U(s) - R(s)G_{co}(s)\|_\infty \geq \min_{Q \in RH_\infty} \|U(s) - Q(s)\|_\infty \geq \|\Gamma_U\|_H$$

where Γ_U *and* $\|\Gamma_U\|_H$ *represent the Hankel operator of* $U(s)$ *and its Hankel norm, and the last inequality can be found in Francis's book. Since* $G_{ci}(s) \in RH_\infty$, $U(s) = G_{ci}^*(s)$ *is an anti-stable transfer function matrix. Thus, denoting the minimal space realization of* $U(s)$ *by* (A_U, B_U, C_U, D_U), *which gives* $\Gamma_U = (A_U, B_U, C_U, 0)$, *we have, following,*

$$\|\Gamma_U\|_H = (\lambda_{max})^{1/2} \tag{14.23}$$

where λ_{max} *is the maximal eigenvalue of matrix* PQ *with* P *and* Q *solving*

$$A_U P + P A_U^\top = B_U B_U^\top, A_U^\top Q + Q A_U = C_U^\top C_U$$

Moreover, it holds

$$\text{for } U(s) = G_{ci}^*(s), PQ = I. \tag{14.24}$$

Therefore,

$$\|\Gamma_U\|_H = 1$$

and so

$$\min_R \|U(s) - R(s)G_{co}(s)\|_\infty \geq 1. \tag{14.25}$$

Summarizing (14.22)-(14.25) finally yields

$$\min_R \|I - R(s)\bar{G}_f(s)\|_\infty = \min_R \|U(s) - R(s)G_{co}(s)\|_\infty = \|\Gamma_U\|_H = 1.$$

13. Design of sub-optimal state feedback controllers

13.1 Problem formulation:

Plant model: state space equation

$$\dot{x} = Ax + Bu + E_d d$$

Output equation:

$$y = x$$

Control output (objective):

$$z = C_z x + F_z d$$

Control law:

$$u = Ky, K \text{ is a constant matrix}$$

Control objective:

Minimising the influence of *d* on the control output

The dynamics of the closed-loop:

$$\dot{x} = (A + BK)x + E_d d$$

$$z = C_z x + F_z d$$

$$G(s) = C_z \left(sI - A - BK\right)^{-1} E_d + F_z$$

$H_{infinity}$ (sub-) optimal controller

Design objective: (sub) minimisation of the influence of *d* in the sense of $H_{infinity}$- norm

Problem formulation: Given the above system and a constant α, find the feedback gain *K* such that the closed-loop system is stable and

$$\int_0^\infty z^T(t)z(t)dt = \frac{1}{2\pi}\int_{-\infty}^{\infty} z^T(-j\omega)z(j\omega)d\omega \le \alpha\int_0^\infty d^T(t)d(t)dt = \frac{1}{2\pi}\int_{-\infty}^{\infty} d^T(-j\omega)d(j\omega)d\omega$$

$$\Leftrightarrow \left\|G(s)\right\|_\infty = \left\|C_z \left(sI - A - BK\right)^{-1} E_d + F_z\right\|_\infty < \alpha$$

Outline of a solution:

- Step 1: formulate the problem as LMIs

$$\|G(s)\|_\infty = \left\| C_z \left(sI - A - BK \right)^{-1} E_d + F_z \right\| < \alpha$$

$$\Leftrightarrow \begin{bmatrix} (A+BK)^T P + P(A+BK) & PE_d & C_z^T \\ E_d^T P & -\alpha I & F_z^T \\ C_z & F_z & -\alpha I \end{bmatrix} < 0, P > 0$$

- Step 2: do a state transformation

$$\begin{bmatrix} P^{-1} & 0 & 0 \\ 0 & I & 0 \\ 0 & 0 & I \end{bmatrix} \begin{bmatrix} (A+BK)^T P + P(A+BK) & PE_d & C_z^{\ T} \\ E_d^{\ T} P & -\alpha I & F_z^{\ T} \\ C_z & F_z & -\alpha I \end{bmatrix} \begin{bmatrix} P^{-1} & 0 & 0 \\ 0 & I & 0 \\ 0 & 0 & I \end{bmatrix}$$

$$= \begin{bmatrix} P^{-1}(A+BK)^T + (A+BK)P^{-1} & E_d & P^{-1}C_z^{\ T} \\ E_d^{\ T} & -\alpha I & F_z^{\ T} \\ C_z P^{-1} & F_z & -\alpha I \end{bmatrix}$$

- Step 3: Set the controller

$$K = YP = YX^{-1}$$

- Step 4: Solve the LMIs - find *X>0, Y* such that

$$\begin{bmatrix} XA^T + Y^T B^T + AX + BY & E_d & XC_z^{\ T} \\ E_d^{\ T} & -\alpha I & F_z^{\ T} \\ C_z X & F_z & -\alpha I \end{bmatrix} < 0, X > 0$$

Result:

$$\|z\|_2 \le \|G(s)\|_\infty \|d\|_2 = \left\| C_z \left(sI - A - BYX^{-1} \right)^{-1} E_d + F_z \right\|_\infty \|d\|_2 < \alpha \|d\|_2$$

13.2 Generalised H_2 (sub-) optimal controller

Design objective: (sub) minimisation of the influence of *d* in the sense of generalised H_2 -norm

Problem formulation: Given the above system and a constant α, find the feedback gain *K* such that the closed-loop system is stable and

$$\max_t \left\{ z^T(t)z(t) \right\} \le \alpha^2 \int_0^\infty d^T(t)d(t)dt = \frac{\alpha^2}{2\pi} \int_{-\infty}^{\infty} d^T(-j\omega)d(j\omega)d\omega$$

$$\Leftrightarrow \left\| G(s) \right\|_g = \left\| C_z \left(sI - A - BK \right)^{-1} E_d + F_z \right\|_g < \alpha$$

Outline of a solution:

- Step 1: formulate the problem as LMIs

$$\begin{bmatrix} (A+BK)^T P + P(A+BK) & PE_d \\ E_d{}^T P & -I \end{bmatrix} < 0, \begin{bmatrix} P & C_z{}^T \\ C_z & \alpha^2 I \end{bmatrix} > 0$$

- Step 2: Do an equivalent state transformation

$$\begin{bmatrix} X(A+BK)^T+(A+BK)X & E_d \\ E_d^{\ T} & -I \end{bmatrix} < 0, \begin{bmatrix} X & XC_z^{\ T} \\ C_z X & \alpha^2 I \end{bmatrix} > 0$$

- Step 3: Solve the LMIs: find *X>0, Y* such that

$$\begin{bmatrix} XA^T+Y^TB^T+AX+BY & E_d \\ E_d^{\ T} & -I \end{bmatrix} < 0, \begin{bmatrix} X & XC_z^{\ T} \\ C_z X & \alpha^2 I \end{bmatrix} > 0$$

- Step 4: Set the controller

$$K = YP = YX^{-1}$$

Result:

$$\|z\|_\infty \le \|G(s)\|_g \|d\|_2 = \left\| C_z \left(sI - A - BYX^{-1} \right)^{-1} E_d + F_z \right\|_g \|d\|_2 < \alpha \|d\|_2$$

13.3 Multi-objective (sub-) optimal controllers

Problem formulation: Given the above system, find the feedback gain *K* such that the closed-loop system is stable and satisfies

$$\int_0^\infty z^T(t)z(t)dt < \alpha^2 \int_0^\infty d^T(t)d(t)dt$$

$$\max_t \left\{ z^T(t)z(t) \right\} < \gamma^2 \int_0^\infty d^T(t)d(t)dt$$

$$\Leftrightarrow \|G(s)\|_\infty = \left\| C_z \left(sI - A - BK \right)^{-1} E_d + F_z \right\|_\infty < \alpha$$

$$\|G(s)\|_g = \left\| C_z (sI - A - BK)^{-1} E_d + F_z \right\|_g < \gamma$$

Outline of a solution:

- Step 1: formulate the problem as LMIs

$$\begin{bmatrix} (A+BK)^T P + P(A+BK) & PE_d & C_z^T \\ E_d^T P & -\alpha I & F_z^T \\ C_z & F_z & -\alpha I \end{bmatrix} < 0$$

$$\begin{bmatrix} (A+BK)^T P + P(A+BK) & PE_d \\ E_d^T P & -I \end{bmatrix} < 0, \begin{bmatrix} P & C_z^T \\ C_z & \gamma^2 I \end{bmatrix} > 0$$

- Step 2: Do an equivalent state transformation

$$\begin{bmatrix} XA^T + Y^T B^T + AX + BY & E_d & XC_z^T \\ E_d^T & -\alpha I & F_z^T \\ C_z X & F_z & -\alpha I \end{bmatrix} < 0$$

$$\begin{bmatrix} X(A+BK)^T + (A+BK)X & E_d \\ E_d^T & -I \end{bmatrix} < 0, \begin{bmatrix} X & XC_z^T \\ C_z X & \alpha^2 I \end{bmatrix} > 0$$

- Step 3: Solve the LMIs: find *X>0, Y* such that

$$\begin{bmatrix} XA^T + Y^T B^T + AX + BY & E_d & XC_z^{\ T} \\ E_d^{\ T} & -\alpha I & F_z^{\ T} \\ C_z X & F_z & -\alpha I \end{bmatrix} < 0$$

$$\begin{bmatrix} XA^T + Y^T B^T + AX + BY & E_d \\ E_d^{\ T} & -I \end{bmatrix} < 0, \begin{bmatrix} X & XC_z^{\ T} \\ C_z X & \gamma^2 I \end{bmatrix} > 0$$

- Step 4: Set the controller

$$K = YP = YX^{-1}$$

13.4 Sub-optimal controller design with pole placement constrains

Background:

- There exists a direct relationship between the system dynamics and the position of poles in the complex plane
- It is often desired that the control is not only robust against the disturbance but of suitable dynamic behavior

Basic idea:

- Given system $\dot{x} = Ax + Bu$ it is stable iff there exists a *P>0* such that

$$AP + PA^T < 0$$

i.e. $\mathrm{Re}(eig(A)) < 0$

- It is desired that

$$\mathrm{Re}(eig(A)) < -\alpha_1, \alpha_1 > 0$$

This requirement is satisfied iff there exists a *P>0* such that

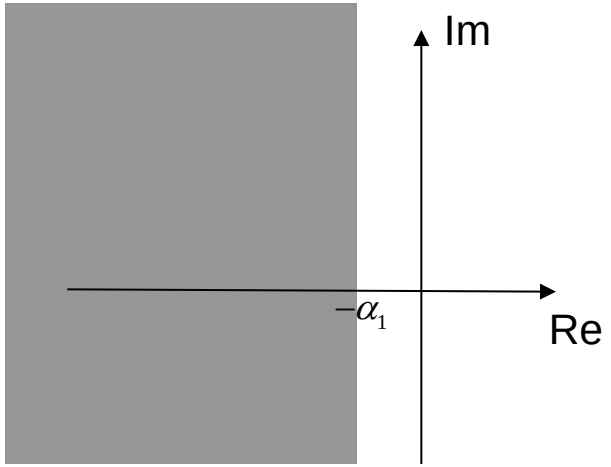

$$(A+\alpha_1 I)P + P(A+\alpha_1 I)^T < 0$$

$$i.e. \operatorname{Re}(eig(A+\alpha_1 I)) < 0 \Leftrightarrow \operatorname{Re}(eig(A)) < -\alpha_1$$

- If it is desired that in addition

$$-\alpha_2 < \mathrm{Re}(eig(A)), \alpha_2 > 0$$

then two LMI should be satisfied

$$(A+\alpha_1 I)P + P(A+\alpha_1 I)^T < 0, (A+\alpha_2 I)P + P(A+\alpha_2 I)^T > 0$$

The second LMI ensures that

$$\mathrm{Re}(eig(A+\alpha_2 I)) > 0 \Rightarrow \mathrm{Re}(eig(A)) > -\alpha_2$$

Combining the above-given LMIs
with the (sub) optimal controller design
gives the (sub) optimal controller design
With pole placement constrains

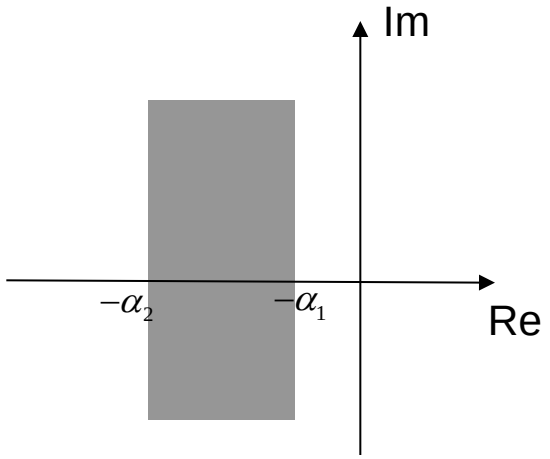

Example: $H_{infinity}$ (sub-) optimal controller with pole placement constrains

Problem formulation: Find the feedback gain K such that the closed-loop system is stable and satisfied

$$\|G(s)\|_\infty = \left\| C_z \left(sI - A - BK \right)^{-1} E_d + F_z \right\|_\infty < \alpha, -\alpha_2 < \mathrm{Re}(eig(A+BK)) < -\alpha_1$$

A possible solution: If the following LMIs are solvable for X, Y

$$\begin{bmatrix} XA^T + Y^T B^T + AX + BY & E_d & XC_z^{\ T} \\ E_d^{\ T} & -\alpha I & F_z^{\ T} \\ C_z X & F_z & -\alpha I \end{bmatrix} < 0$$

$$XA^T + Y^T B^T + AX + BY + 2\alpha_1 X < 0$$

$$XA^T + Y^T B^T + AX + BY + 2\alpha_2 X > 0, X > 0$$

then the control law

$$K = YP = YX^{-1}$$

solves the design problem.

13.5 Design of (sub-) optimal state observers

Plant model: state space equation

$$\dot{x} = Ax + Bu + E_d d$$

Output equation:

$$y = Cx + F_d d + Du$$

Observer:

$$\dot{\hat{x}} = A\hat{x} + Bu + L(y - C\hat{x} - Du)$$

Design objective: Minimising estimation error

Dynamics of estimation error:

$$\dot{e} = (A - LC)e + (E_d - LF_d)d, e = x - \hat{x}$$

Problem formulation: Given the above system and a constant α , find the observer gain *L* such that the system is stable and

$$\int_0^\infty e^T(t)e(t)dt = \frac{1}{2\pi}\int_{-\infty}^{\infty} e^T(-j\omega)e(j\omega)d\omega < \alpha\int_0^\infty d^T(t)d(t)dt = \frac{\alpha}{2\pi}\int_{-\infty}^{\infty} d^T(-j\omega)d(j\omega)d\omega$$

$$\Leftrightarrow \|G(s)\|_\infty = \left\|\left(sI - A + LC\right)^{-1}(E_d - LF_d)\right\|_\infty < \alpha$$

Outline of a solution:

- Step 1: formulate the problem as LMIs

$$\|G(s)\|_\infty = \left\|\left(sI - A + LC\right)^{-1}(E_d - LF_d)\right\|_\infty < \alpha$$

$$\Leftrightarrow \begin{bmatrix} (A-LC)^T P + P(A-LC) & P(E_d - LF_d) & I \\ (E_d - LF_d)^T P & -\alpha I & 0 \\ I & 0 & -\alpha I \end{bmatrix} < 0, P > 0$$

- Step 2: Solve the LMIs: find *P>0, Y* such that

$$\Leftrightarrow \begin{bmatrix} A^T P - C^T Y^T + PA - YC & PE_d - YF_d & I \\ E_d^T P - F_d^T Y^T & -\alpha I & 0 \\ I & 0 & -\alpha I \end{bmatrix} < 0, P > 0$$

- Step 3: Set the observer gain

$$L = P^{-1} Y$$

Final result:

$$\|G(s)\|_\infty = \left\| \left(sI - A + P^{-1} YC \right)^{-1} (E_d - P^{-1} YF_d) \right\|_\infty < \alpha$$

Part 4: Robust controller design for uncertain systems

14. Stability analysis of uncertain systems

14.1 Small gain theorem

Given system $M \in RH_\infty, \gamma > 0$

Then the closed-loop is stable for **all**

uncertainty $\Delta \in RH_\infty$ with

(i) $\|\Delta\|_\infty \le 1/\gamma$ if and only if $\|M\|_\infty < \gamma$

(ii) $\|\Delta\|_\infty < 1/\gamma$ if and only if $\|M\|_\infty \le \gamma$

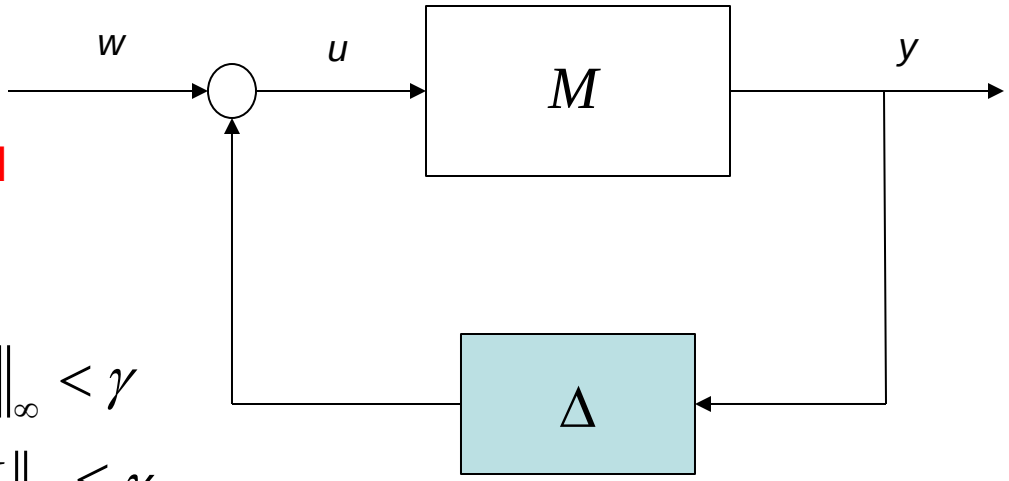

The results hold also for “stable” nonlinear uncertainty or “stable” time-varying uncertainty!

Proof of sufficiency:

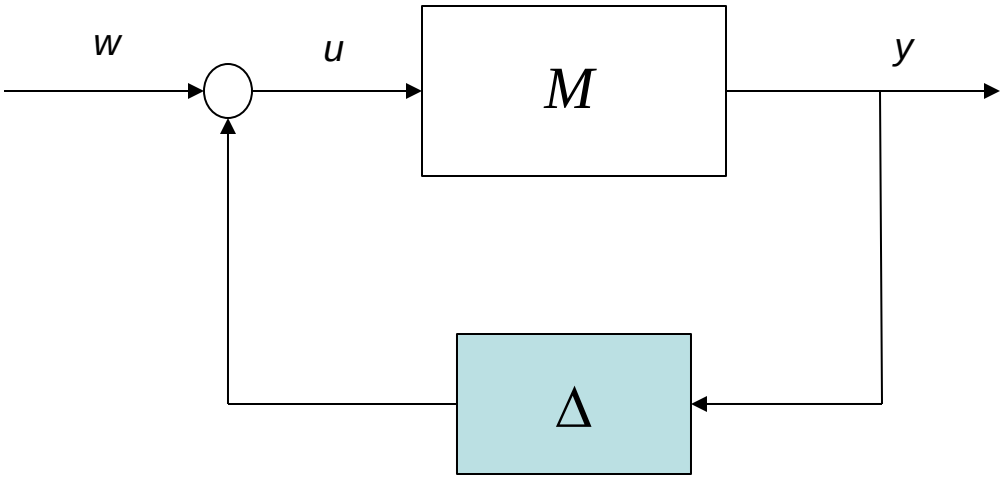

14.2 Coprime factor uncertainty

Nominal model: $G_o(s) = N(s)M^{-1}(s) = \hat{M}^{-1}(s)\hat{N}(s) \Rightarrow$

$$G(s) = \left(N + \Delta_N\right)\left(M + \Delta_M\right)^{-1} = \left(\hat{M} + \Delta_{\hat{M}}\right)^{-1}\left(\hat{N} + \Delta_{\hat{N}}\right)$$

$$\Delta_N, \Delta_M, \Delta_{\hat{M}}, \Delta_{\hat{N}} \in RH_\infty$$

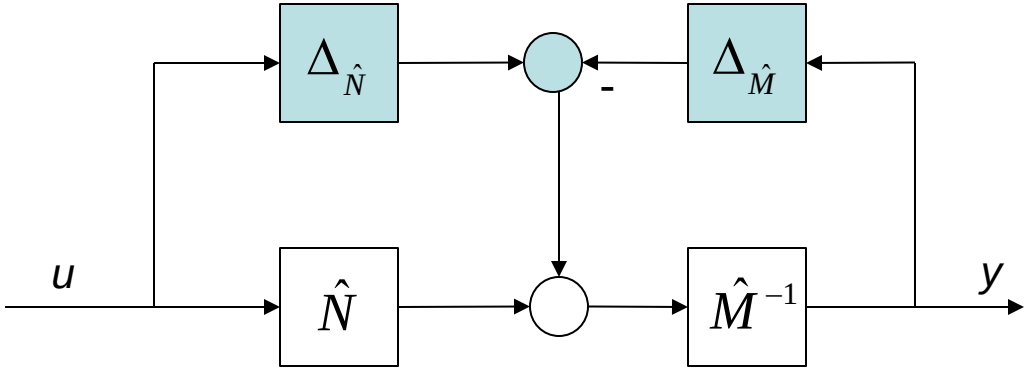

14.3 Stability analysis

Given the feedback control loop with

$$G(s) = \left(\hat{M} + \Delta_{\hat{M}}\right)^{-1}\left(\hat{N} + \Delta_{\hat{N}}\right), G_o = \hat{M}^{-1}\hat{N}, \Delta_{\hat{M}}, \Delta_{\hat{N}} \in RH_\infty$$

Assume that $\left\| \Delta_{\hat{N}} \quad \Delta_{\hat{M}} \right\|_\infty \le \varepsilon$

Then, the closed-loop is stable if and only if

$$\left\| \begin{bmatrix} K \\ I \end{bmatrix} \left(I + G_o K\right)^{-1} \hat{M}^{-1} \right\|_\infty < 1/\varepsilon$$

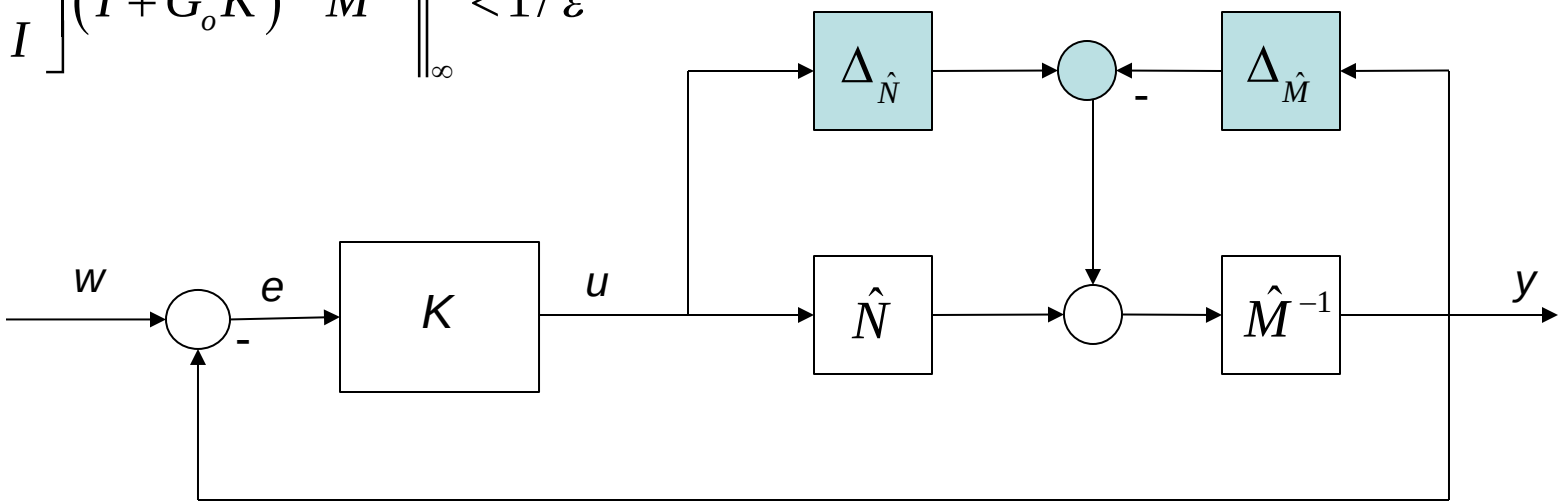

$$\begin{bmatrix} -u \\ y \end{bmatrix} = \begin{bmatrix} K \\ I \end{bmatrix} \left(I + G_o K \right)^{-1} \hat{M}^{-1} \alpha$$

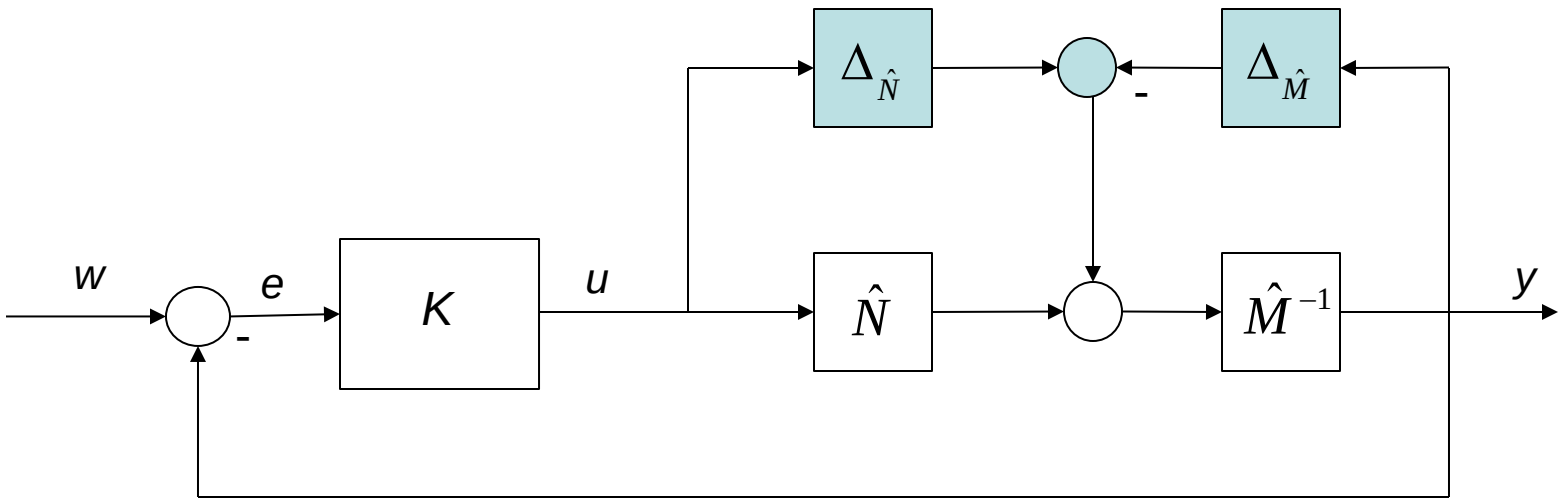

Proof:

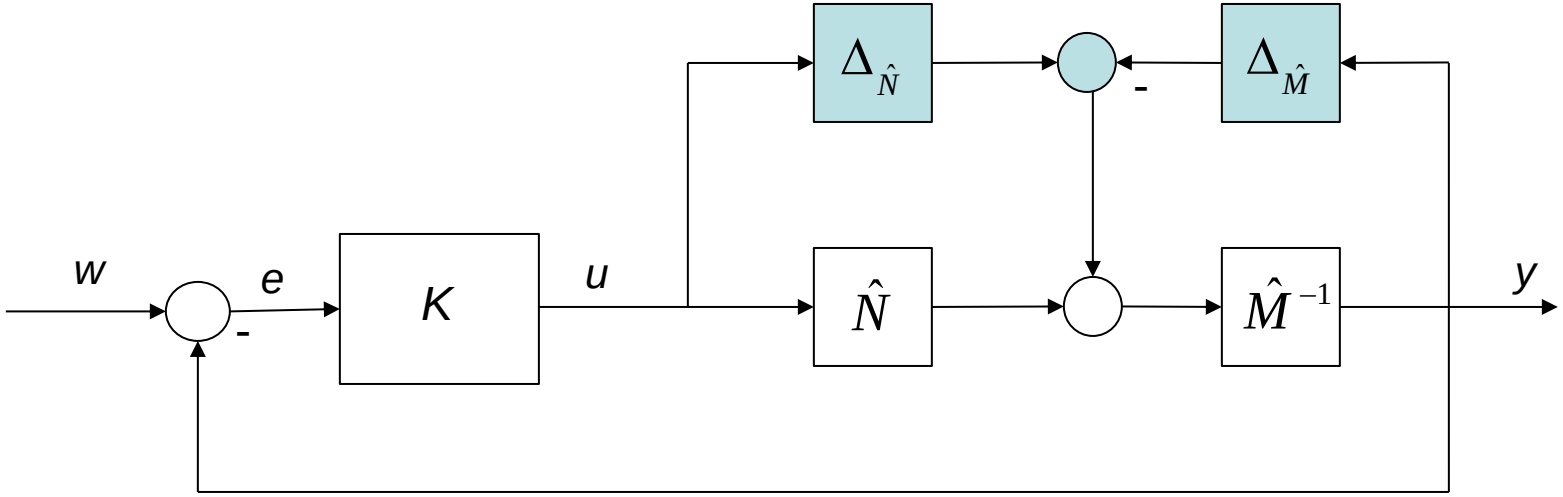

Stability margin: “how much” uncertainty can be tolerated?

$$\left\| \begin{bmatrix} K \\ I \end{bmatrix} \left(I + G_o K \right)^{-1} \hat{M}^{-1} \right\|_\infty < 1/\varepsilon \Rightarrow \left\| \begin{bmatrix} K \\ I \end{bmatrix} \left(I + G_o K \right)^{-1} \hat{M}^{-1} \right\|_\infty^{-1} > \varepsilon$$

Def.: $b = \left\| \begin{bmatrix} K \\ I \end{bmatrix} \left(I + G_o K \right)^{-1} \hat{M}^{-1} \right\|_\infty^{-1}$ is the stability margin of the system*.

Let $K = UV^{-1} = (\hat{Y} + MQ)(\hat{X} - NQ)^{-1}$

then $\begin{bmatrix} K \\ I \end{bmatrix} \left(I + G_o K \right)^{-1} \hat{M}^{-1} = \begin{bmatrix} U \\ V \end{bmatrix} \left(\hat{M}V + \hat{N}U \right)^{-1}$

$$= \begin{bmatrix} U \\ V \end{bmatrix} \left(\hat{M}(\hat{X} - NQ) + \hat{N}\left(\hat{Y} + MQ \right) \right)^{-1} = \begin{bmatrix} U \\ V \end{bmatrix} = \begin{bmatrix} \hat{Y} + MQ \\ \hat{X} - NQ \end{bmatrix}$$ (by Bezout identity)

since $\hat{M}(\hat{X} - NQ) + \hat{N}\left(\hat{Y} + MQU \right) = \hat{M}\hat{X} + \hat{N}\hat{Y} + \left(\hat{N}M - \hat{M}N \right) Q = I$

See also the controller design in the subsequent section.

* S. Skogestad and I. Postlethwaite, Multivariable feedback control, Wiley, second edition, 2005

As a result,

$$b = \left\| \begin{bmatrix} K \\ I \end{bmatrix} \left(I + G_o K \right)^{-1} \hat{M}^{-1} \right\|_\infty^{-1} = \left\| \begin{bmatrix} \hat{Y} + MQ \\ \hat{X} - NQ \end{bmatrix} \right\|_\infty^{-1}$$

Stability margin depends on the system (nominal) model and the controller used.

Thus, controller design can be e.g. formulated as

$$\max_K b = \max_K \left\| \begin{bmatrix} K \\ I \end{bmatrix} \left(I + G_o K \right)^{-1} \hat{M}_o^{-1} \right\|_\infty^{-1} = \max_{Q \in RH_\infty} \left\| \begin{bmatrix} \hat{Y} + MQ \\ \hat{X} - NQ \end{bmatrix} \right\|_\infty^{-1}$$

in order to achieve the maximum tolerance to the uncertainty.

It is an MMP.

Given the feedback control loop with

Nominal model: $G_o(s) = N(s)M^{-1}(s) \Rightarrow$

uncertain model: $G(s) = \left(N + \Delta_N\right)\left(M + \Delta_M\right)^{-1}$

$$\Delta_N, \Delta_M \in RH_\infty, \left\| \begin{matrix} \Delta_M \\ \Delta_N \end{matrix} \right\| \le \varepsilon$$

Check:

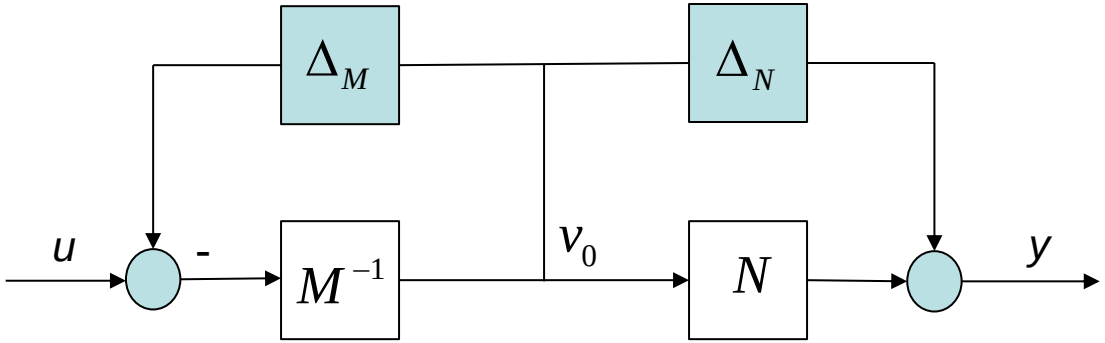

$$y = G(s)u = \left(N + \Delta_N\right)\left(M + \Delta_M\right)^{-1} u$$

$$\begin{bmatrix} u \\ y \end{bmatrix} = \begin{bmatrix} M + \Delta_M \\ N + \Delta_N \end{bmatrix} v_0$$

$$y = G(s)u = \left(N + \Delta_N\right)\left(M + \Delta_M\right)^{-1} u$$

$$\alpha = \begin{bmatrix} -\hat{N} & \hat{M} \end{bmatrix} \begin{bmatrix} u \\ y \end{bmatrix} = \begin{bmatrix} -\hat{N} & \hat{M} \end{bmatrix} \begin{bmatrix} M + \Delta_M \\ N + \Delta_N \end{bmatrix} v_0 = \begin{bmatrix} -\hat{N} & \hat{M} \end{bmatrix} \begin{bmatrix} \Delta_M \\ \Delta_N \end{bmatrix} v_0$$

How to study the closed-loop stability problem?

15. A residual based robust control scheme for uncertain systems

15.1 The scheme with LCF uncertainty

Nominal model: $G_o(s) = \hat{M}^{-1}(s)\hat{N}(s) \Rightarrow$

uncertain model: $G(s) = \left(\hat{M} + \Delta_{\hat{M}}\right)^{-1}\left(\hat{N} + \Delta_{\hat{N}}\right)$

$\Delta_{\hat{M}}, \Delta_{\hat{N}} \in RH_\infty$

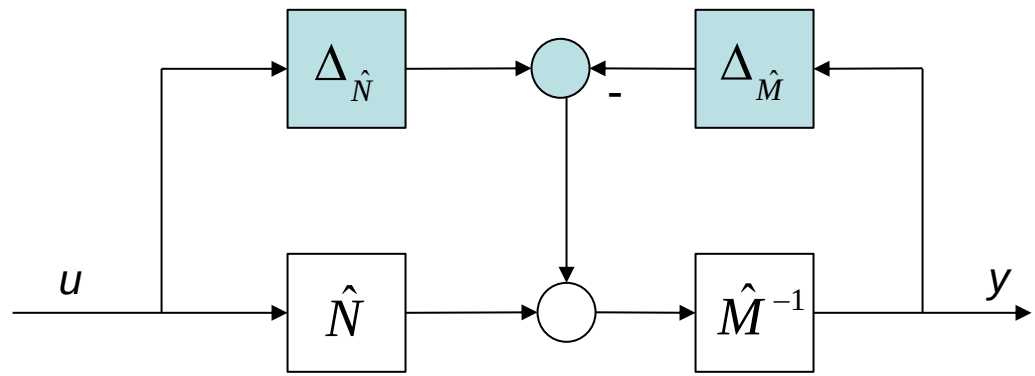

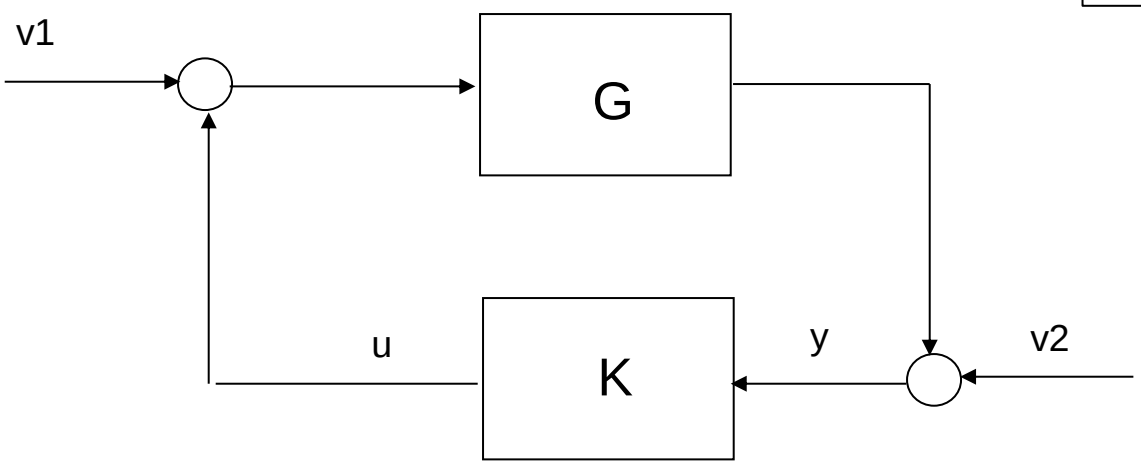

$$K = -(\hat{Y} + MQ)(\hat{X} - NQ)^{-1}, Q \in RH_\infty$$

$$u = Ky = -(\hat{Y} + MQ)(\hat{X} - NQ)^{-1} y \Rightarrow \begin{bmatrix} u \\ y \end{bmatrix} = \begin{bmatrix} -(\hat{Y} + MQ) \\ \hat{X} - NQ \end{bmatrix} r_o$$

$$\dot{\hat{x}} = A\hat{x} + Bu + Lr_o, r_o = y - \hat{y}$$

$$r_o = \hat{M}y - \hat{N}u \Rightarrow$$

$$r_o = \Delta_{\hat{N}} u - \Delta_{\hat{M}} y = \begin{bmatrix} \Delta_{\hat{N}} & -\Delta_{\hat{M}} \end{bmatrix} \begin{bmatrix} u \\ y \end{bmatrix}$$

$$\begin{bmatrix} u \\ y \end{bmatrix} = \begin{bmatrix} -(\hat{Y} + MQ) \\ \hat{X} - NQ \end{bmatrix} r_o = \begin{bmatrix} -(\hat{Y} + MQ) \\ \left(\hat{X} - NQ\right) \end{bmatrix} \begin{bmatrix} \Delta_{\hat{N}} & -\Delta_{\hat{M}} \end{bmatrix} \begin{bmatrix} u \\ y \end{bmatrix}$$

$$\left(I - \begin{bmatrix} -(\hat{Y} + MQ) \\ \left(\hat{X} - NQ\right) \end{bmatrix} \begin{bmatrix} \Delta_{\hat{N}} & -\Delta_{\hat{M}} \end{bmatrix} \right) \begin{bmatrix} u \\ y \end{bmatrix} = 0 \text{ is stable}$$

$$\Leftrightarrow \left(I - \begin{bmatrix} -(\hat{Y} + MQ) \\ \left(\hat{X} - NQ\right) \end{bmatrix} \begin{bmatrix} \Delta_{\hat{N}} & -\Delta_{\hat{M}} \end{bmatrix} \right)^{-1} \text{ is stable}$$

Assume that $\left\| \Delta_{\hat{N}} \quad \Delta_{\hat{M}} \right\|_\infty \leq \varepsilon$

It follows from the Small Gain Theorem (SGT) that

$$\left\| \begin{matrix} -(\hat{Y} + MQ) \\ \left(\hat{X} - NQ\right) \end{matrix} \right\|_\infty < \frac{1}{\varepsilon}$$

Find Q s.t.

$$\left\| \begin{bmatrix} -\hat{Y} \\ \hat{X} \end{bmatrix} - \begin{bmatrix} M \\ N \end{bmatrix} Q \right\|_\infty < \frac{1}{\varepsilon}$$

Study on a more general configuration

Model:

$$y = G(s)\left(u + v_1\right) + v_2$$

$$= \left(\hat{M} + \Delta_{\hat{M}}\right)^{-1}\left(\hat{N} + \Delta_{\hat{N}}\right)\left(u + v_1\right) + v_2$$

$$: \Delta_{\hat{M}}, \Delta_{\hat{N}} \in RH_\infty$$

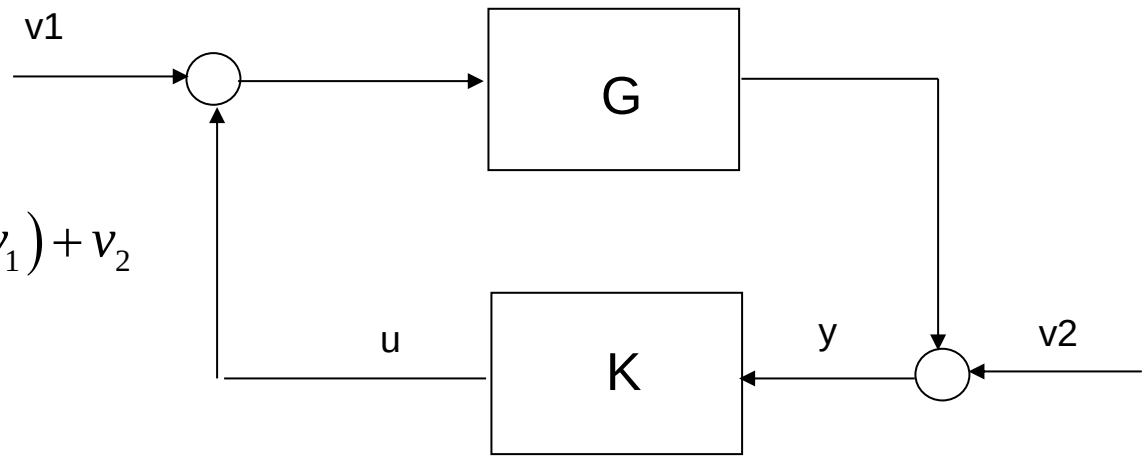

Controller:

$$K = -(\hat{Y} + MQ)(\hat{X} - NQ)^{-1}, Q \in RH_\infty$$

$$\dot{\hat{x}} = A\hat{x} + Bu + Lr_o = A\hat{x} + B(F\hat{x} - Qr_o) + Lr_o = \left(A + BF\right)\hat{x} - BQr_o + Lr_o$$

$$\Rightarrow u = F\hat{x} - Qr_o = -\left(\hat{Y} + MQ\right)r_o, r_o = y - \hat{y}$$

$$\hat{Y}(s) = (A + BF, -L, F, O), M(s) = (A + BF, B, F, I)$$

$$y = r_o + \hat{y} = \hat{X}r_o - NQr_o$$

$$\hat{X}(s) = (A + BF, L, C + DF, I), N(s) = (A + BF, B, C + DF, D)$$

$$u = Ky = -(\hat{Y} + MQ)(\hat{X} - NQ)^{-1} y \Rightarrow \begin{bmatrix} u \\ y \end{bmatrix} = \begin{bmatrix} -(\hat{Y} + MQ) \\ \hat{X} - NQ \end{bmatrix} r_o$$

$$y = \left(\hat{M} + \Delta_{\hat{M}}\right)^{-1} \left(\hat{N} + \Delta_{\hat{N}}\right)\left(u + v_1\right) + v_2, r_o = \hat{M}y - \hat{N}u \Rightarrow$$

$$r_o = \begin{bmatrix} \Delta_{\hat{N}} & -\Delta_{\hat{M}} \end{bmatrix} \begin{bmatrix} u \\ y \end{bmatrix} + \begin{bmatrix} \hat{N} + \Delta_{\hat{N}} & \hat{M} + \Delta_{\hat{M}} \end{bmatrix} \begin{bmatrix} v_1 \\ v_2 \end{bmatrix}$$

$$\begin{bmatrix} u \\ y \end{bmatrix} = \begin{bmatrix} -(\hat{Y}+MQ) \\ \hat{X}-NQ \end{bmatrix} r_o = \begin{bmatrix} -(\hat{Y}+MQ) \\ \left(\hat{X}-NQ\right) \end{bmatrix} \left(\begin{bmatrix} \Delta_{\hat{N}} & -\Delta_{\hat{M}} \end{bmatrix} \begin{bmatrix} u \\ y \end{bmatrix} + \begin{bmatrix} \hat{N}+\Delta_{\hat{N}} & \hat{M}+\Delta_{\hat{M}} \end{bmatrix} \begin{bmatrix} v_1 \\ v_2 \end{bmatrix} \right)$$

$$\Rightarrow \left(I - \begin{bmatrix} -(\hat{Y}+MQ) \\ \left(\hat{X}-NQ\right) \end{bmatrix} \begin{bmatrix} \Delta_{\hat{N}} & -\Delta_{\hat{M}} \end{bmatrix} \right) \begin{bmatrix} u \\ y \end{bmatrix} = \begin{bmatrix} -(\hat{Y}+MQ) \\ \left(\hat{X}-NQ\right) \end{bmatrix} \begin{bmatrix} \hat{N}+\Delta_{\hat{N}} & \hat{M}+\Delta_{\hat{M}} \end{bmatrix} \begin{bmatrix} v_1 \\ v_2 \end{bmatrix}$$

$$\Leftrightarrow \begin{bmatrix} u \\ y \end{bmatrix} = \left(I - \begin{bmatrix} -(\hat{Y}+MQ) \\ \left(\hat{X}-NQ\right) \end{bmatrix} \begin{bmatrix} \Delta_{\hat{N}} & -\Delta_{\hat{M}} \end{bmatrix} \right)^{-1} \begin{bmatrix} -(\hat{Y}+MQ) \\ \left(\hat{X}-NQ\right) \end{bmatrix} \begin{bmatrix} \hat{N}+\Delta_{\hat{N}} & \hat{M}+\Delta_{\hat{M}} \end{bmatrix} \begin{bmatrix} v_1 \\ v_2 \end{bmatrix}$$

The system is stable iff

$$\left(I - \begin{bmatrix} -(\hat{Y} + MQ) \\ \left(\hat{X} - NQ\right) \end{bmatrix} \begin{bmatrix} \Delta_{\hat{N}} & -\Delta_{\hat{M}} \end{bmatrix} \right)^{-1} \in RH_\infty$$

Assume that $\left\| \Delta_{\hat{N}} \quad \Delta_{\hat{M}} \right\|_\infty \leq \varepsilon$

It follows from the Small Gain Theorem (SGT) that

$$\left\| \begin{matrix} -(\hat{Y} + MQ) \\ \left(\hat{X} - NQ\right) \end{matrix} \right\|_\infty < \frac{1}{\varepsilon}$$

Find Q s.t.

$$\left\| \begin{bmatrix} -\hat{Y} \\ \hat{X} \end{bmatrix} - \begin{bmatrix} M \\ N \end{bmatrix} Q \right\|_\infty < \frac{1}{\varepsilon}$$

A possible application:

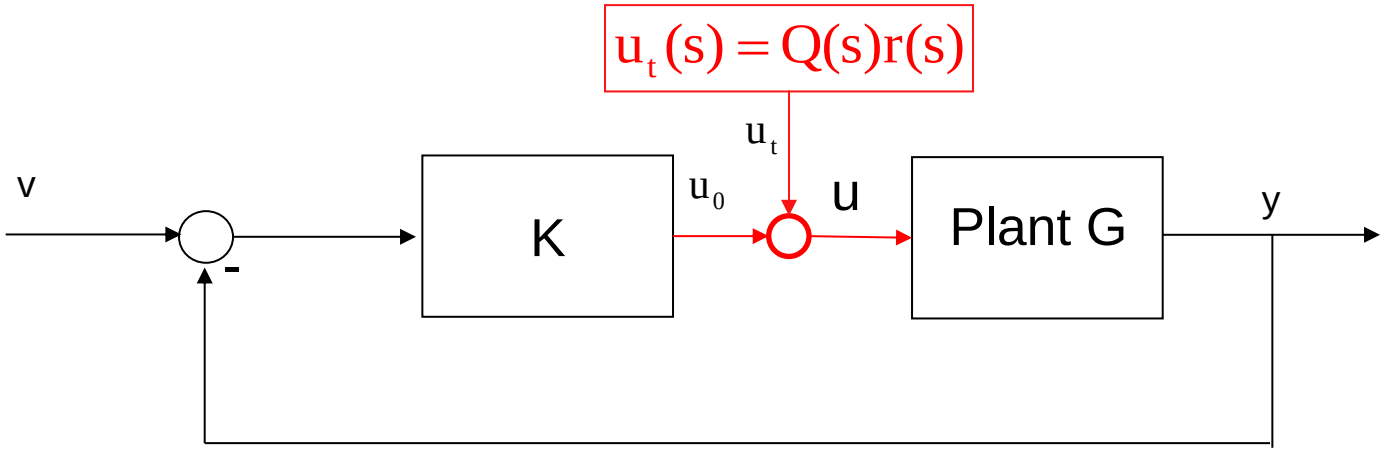

15.2 The scheme with RCF uncertainty

Nominal model: $G_o(s) = N(s)M^{-1}(s) \Rightarrow$

uncertain model: $G(s) = \left(N + \Delta_N\right)\left(M + \Delta_M\right)^{-1}, \begin{bmatrix} u \\ y \end{bmatrix} = \begin{bmatrix} M + \Delta_M \\ N + \Delta_N \end{bmatrix} v_0$

$\Delta_N, \Delta_M \in RH_\infty, \left\| \begin{matrix} \Delta_M \\ \Delta_N \end{matrix} \right\| \le \varepsilon$

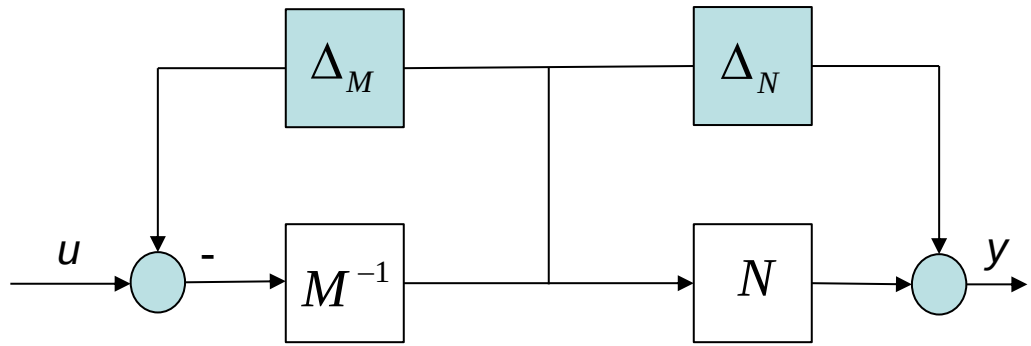

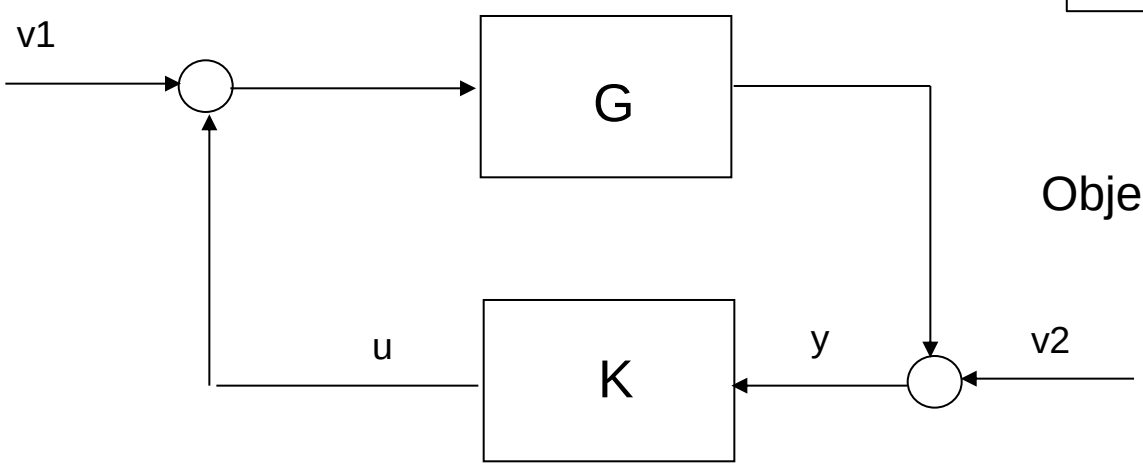

Objective: stability study and controller design scheme

Model:

$$y = G(s)\left(u + v_1\right) + v_2$$

$$= \left(N + \Delta_N\right)\left(M + \Delta_M\right)^{-1}\left(u + v_1\right) + v_2$$

$$: \Delta_M, \Delta_N \in RH_\infty$$

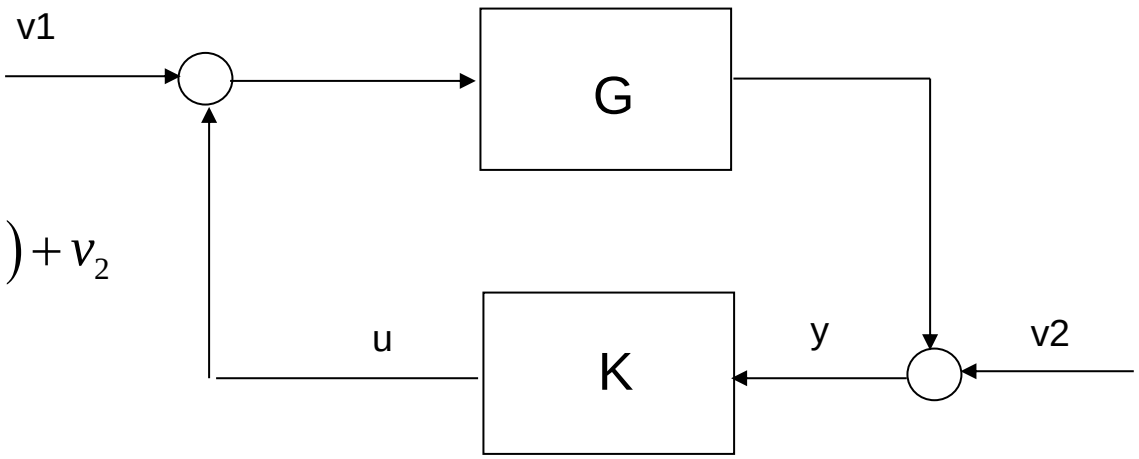

Controller:

$$K = -(X - Q\hat{N})^{-1}(Y + Q\hat{M}), Q \in RH_\infty$$

$$u = Ky = -(X - Q\hat{N})^{-1}(Y + Q\hat{M})y \Rightarrow$$

$$(X - Q\hat{N})u + (Y + Q\hat{M})y = 0$$

$$\begin{bmatrix} u \\ y \end{bmatrix} = \begin{bmatrix} \Delta_M v_0 + u_0 - v_1 \\ \Delta_N v_0 + v_2 + N v_0 \end{bmatrix} =$$

$$\begin{bmatrix} M v_0 + \Delta_M v_0 \\ N v_0 + \Delta_N v_0 \end{bmatrix} + \begin{bmatrix} -v_1 \\ v_2 \end{bmatrix}$$

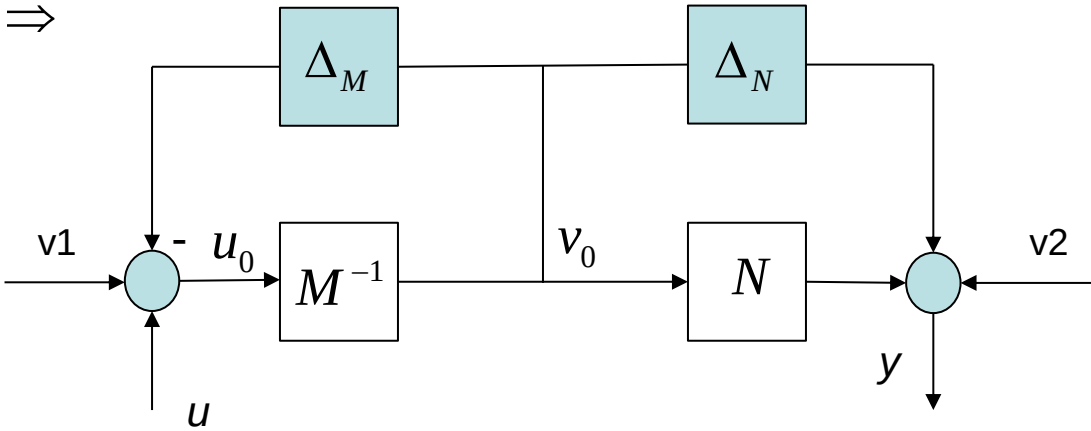

$$(X - Q\hat{N})u + (Y + Q\hat{M})y = 0 \Leftrightarrow \begin{bmatrix} X - Q\hat{N} & Y + Q\hat{M} \end{bmatrix} \begin{bmatrix} u \\ y \end{bmatrix} = 0 \Leftrightarrow$$

$$\begin{bmatrix} X - Q\hat{N} & Y + Q\hat{M} \end{bmatrix} \begin{bmatrix} Mv_0 + \Delta_M v_0 \\ Nv_0 + \Delta_N v_0 \end{bmatrix} = \begin{bmatrix} X - Q\hat{N} & -Y - Q\hat{M} \end{bmatrix} \begin{bmatrix} v_1 \\ v_2 \end{bmatrix}$$

$$\begin{bmatrix} X(s) & Y(s) \\ -\hat{N}(s) & \hat{M}(s) \end{bmatrix} \begin{bmatrix} M(s) & -\hat{Y}(s) \\ N(s) & \hat{X}(s) \end{bmatrix} = I \Rightarrow \begin{bmatrix} X - Q\hat{N} & Y + Q\hat{M} \end{bmatrix} \begin{bmatrix} Mv_0 \\ Nv_0 \end{bmatrix} = v_0$$

$$\begin{bmatrix} X - Q\hat{N} & Y + Q\hat{M} \end{bmatrix} \begin{bmatrix} Mv_0 + \Delta_M v_0 \\ Nv_0 + \Delta_N v_0 \end{bmatrix} = \begin{bmatrix} X - Q\hat{N} & -Y - Q\hat{M} \end{bmatrix} \begin{bmatrix} v_1 \\ v_2 \end{bmatrix} \Rightarrow$$

$$\left(I + \begin{bmatrix} X - Q\hat{N} & Y + Q\hat{M} \end{bmatrix} \begin{bmatrix} \Delta_M \\ \Delta_N \end{bmatrix} \right) v_0 = \begin{bmatrix} X - Q\hat{N} & -Y - Q\hat{M} \end{bmatrix} \begin{bmatrix} v_1 \\ v_2 \end{bmatrix}$$

The system is stable iff

$$\left(I + \begin{bmatrix} X - Q\hat{N} & Y + Q\hat{M} \end{bmatrix} \begin{bmatrix} \Delta_M \\ \Delta_N \end{bmatrix} \right)^{-1} \in RH_\infty$$

Assume that $\left\| \begin{matrix} \Delta_M \\ \Delta_N \end{matrix} \right\|_\infty \leq \varepsilon$

It follows from the Small Gain Theorem (SGT) that

$$\left\| \begin{bmatrix} X - Q\hat{N} & Y + Q\hat{M} \end{bmatrix} \right\|_\infty < \frac{1}{\varepsilon}$$

Find R s.t.

$$\left\| \begin{bmatrix} Y & X \end{bmatrix} - R \begin{bmatrix} \hat{M} & -\hat{N} \end{bmatrix} \right\|_\infty < \frac{1}{\varepsilon}$$

16. LMI-aided robust controller design for uncertain systems

16.1 Model and control objective

System model under consideration

$$\dot{x} = Ax + Bu + Ed, z = Cx + Du + Fd, y = x, x(0) = 0$$

$$G: \quad \begin{aligned} &A = A_0 + \Delta A, B = B_0 + \Delta B, C = C_0 + \Delta C \\ &D = D_0 + \Delta D, E = E_0 + \Delta E, F = F_0 + \Delta F \\ &\begin{bmatrix} \Delta A & \Delta B & \Delta E \\ \Delta C & \Delta D & \Delta F \end{bmatrix} = \begin{bmatrix} G \\ H \end{bmatrix} \Sigma \; I \quad J \quad R \;, \bar{\sigma} \; \Sigma \; \leq 1 \end{aligned}$$

Norm-bounded model uncertainties

Controller:

$$u = Kx$$

Dynamics of the closed loop:

$$\dot{x} = \left(A + BK\right)x + Ed, z = \left(C + DK\right)x + Fd$$

$$\begin{bmatrix} \bar{A} & E \\ \bar{C} & F \end{bmatrix} = \begin{bmatrix} \bar{A}_0 & E_0 \\ \bar{C}_0 & F_0 \end{bmatrix} + \begin{bmatrix} G \\ H \end{bmatrix} \Sigma \begin{bmatrix} I + JK & R \end{bmatrix}$$

$$\bar{A} = A + BK, \bar{C} = C + DK, \bar{A}_0 = A_0 + B_0 K, \bar{C} = C_0 + D_0 K$$

Control objective:

$$\|z\|_2^2 < \gamma^2 \|d\|_2^2 \text{ for some given } \gamma > 0$$

$$\gamma^* = \inf \gamma, \frac{\|z\|_2}{\|d\|_2} < \gamma$$

is called (defined as) the L_2 gain (H_infinity norm) of the uncertain system

Objective of the controller design: find *K* s.t. the closed loop is stable and

$$\|z\|_2^2 < \gamma^2 \|d\|_2^2 \text{ for some given } \gamma > 0$$

16.2 An LMI solution

A useful (mathematical) result

Let *G,L,E* and *F(t)* be real matrices of appropriate dimensions with

$$F^T(t)F(t) \le I \Leftrightarrow \bar{\sigma}\ \ F(t)\ \ \le 1$$

Then for any $\varepsilon > 0$

$$LF(t)E + E^T F^T(t)L^T \le \frac{1}{\varepsilon} LL^T + \varepsilon E^T E$$

The procedure of deriving the LMI solution:

- Define a Lyaponuv function

$$V(x) = x^T Px, P > 0$$

and consider

$$\dot{V}(x) + z^T z - \gamma^2 d^T d < 0 \Rightarrow \int_0^\infty \dot{V}(x) + z^T z - \gamma^2 d^T d\ \ dt < 0$$

$$\Leftrightarrow V\ \ x\ \ \infty\ \ + \|z\|_2^2 - \gamma^2 \|d\|_2^2 < 0 \Rightarrow \|z\|_2^2 - \gamma^2 \|d\|_2^2 < 0$$

- Find a (sufficient) condition for $\dot{V}(x)+z^T z-\gamma^2 d^T d<0$

$$\dot{V}(x)+z^T z-\gamma^2 d^T d=\begin{bmatrix} x^T & d^T \end{bmatrix}\left(\begin{bmatrix} \bar{A}^T \\ E^T \end{bmatrix} P \begin{bmatrix} I & 0 \end{bmatrix}+\begin{bmatrix} I \\ 0 \end{bmatrix} P \begin{bmatrix} \bar{A} & E \end{bmatrix}\right)\begin{bmatrix} x \\ d \end{bmatrix}$$

$$+\begin{bmatrix} x^T & d^T \end{bmatrix}\begin{bmatrix} \bar{C}^T \\ F^T \end{bmatrix}\begin{bmatrix} \bar{C} & F \end{bmatrix}\begin{bmatrix} x \\ d \end{bmatrix}-\gamma^2 d^T d$$

$$=\begin{bmatrix} x^T & d^T \end{bmatrix}\left(\begin{bmatrix} \bar{A}^T P+P\bar{A}+\bar{C}^T\bar{C} & PE+\bar{C}^T F \\ E^T P+F^T\bar{C} & F^T F-\gamma^2 \end{bmatrix}\right)\begin{bmatrix} x \\ d \end{bmatrix} \Leftrightarrow$$

$$\dot{V}(x)+z^T z-\gamma^2 d^T d<0 \Leftrightarrow \begin{bmatrix} \bar{A}^T P+P\bar{A}+\bar{C}^T\bar{C} & PE+\bar{C}^T F \\ E^T P+F^T\bar{C} & F^T F-\gamma^2 \end{bmatrix}<0, P>0$$

- Transformation by means of the Schur complement

$$\begin{bmatrix} \underline{A}_{11} & \underline{A}_{12} \\ \underline{A}_{21} & \underline{A}_{22} \end{bmatrix}<0 \Leftrightarrow \underline{\Delta}<0, \underline{\Delta}=\underline{A}_{11}-\underline{A}_{12}\underline{A}_{22}^{-1}\underline{A}_{21}$$

$$\begin{bmatrix} \bar{A}^T P + P\bar{A} + \bar{C}^T \bar{C} & PE + \bar{C}^T F \\ E^T P + F^T \bar{C} & F^T F - \gamma^2 I \end{bmatrix} = \begin{bmatrix} \bar{A}^T P + P\bar{A} & PE \\ E^T P & -\gamma^2 I \end{bmatrix} - \begin{bmatrix} \bar{C}^T \\ F^T \end{bmatrix} (-I) \begin{bmatrix} \bar{C} & F \end{bmatrix}$$

$$\Rightarrow \begin{bmatrix} \bar{A}^T P + P\bar{A} + \bar{C}^T \bar{C} & PE + \bar{C}^T F \\ E^T P + F^T \bar{C} & F^T F - \gamma^2 I \end{bmatrix} < 0 \Leftrightarrow \begin{bmatrix} \bar{A}^T P + P\bar{A} & PE & \bar{C}^T \\ E^T P & -\gamma^2 I & F^T \\ \bar{C} & F & -I \end{bmatrix} < 0$$

- Write the above MI into two terms:

$$\begin{bmatrix} \bar{A}^T P + P\bar{A} & PE & \bar{C}^T \\ E^T P & -\gamma^2 I & F^T \\ \bar{C} & F & -I \end{bmatrix} = \underbrace{\begin{bmatrix} \bar{A}_0^{\,T} P + P\bar{A}_0 & PE_0 & \bar{C}_0^{\,T} \\ E_0^{\,T} P & -\gamma^2 I & F_0^{\,T} \\ \bar{C}_0 & F_0 & -I \end{bmatrix}}_{\text{all known}} + \underbrace{\begin{bmatrix} \Delta\bar{A}^T P + P\Delta\bar{A} & P\Delta E & \Delta\bar{C}^T \\ \Delta E^T P & 0 & \Delta F^T \\ \Delta\bar{C} & \Delta F & 0 \end{bmatrix}}_{\text{including unknown matrix}}$$

- Study the term with uncertainty

$$\begin{bmatrix} \Delta\bar{A}^T P + P\Delta\bar{A} & P\Delta E & \Delta\bar{C}^T \\ \Delta E^T P & 0 & \Delta F^T \\ \Delta\bar{C} & \Delta F & 0 \end{bmatrix} = \begin{bmatrix} PG \\ 0 \\ H \end{bmatrix} \Sigma \; I + JK \quad R \quad 0 + \left(\begin{bmatrix} PG \\ 0 \\ H \end{bmatrix} \Sigma \; I + JK \quad R \quad 0 \right)^T$$

$$\leq \varepsilon^{-1} \begin{bmatrix} PG \\ 0 \\ H \end{bmatrix} \begin{bmatrix} G^T P & 0 & H^T \end{bmatrix} + \varepsilon \begin{bmatrix} I + K^T J^T \\ R^R \\ 0 \end{bmatrix} I + JK \quad R \quad 0 \text{ , for some } \varepsilon > 0$$

It leads to

$$\begin{bmatrix} \bar{A}^T P + P\bar{A} & PE & \bar{C}^T \\ E^T P & -\gamma^2 I & F^T \\ \bar{C} & F & -I \end{bmatrix} \leq \begin{bmatrix} \bar{A}_0{}^T P + P\bar{A}_0 & PE_0 & \bar{C}_0{}^T \\ E_0{}^T P & -\gamma^2 I & F_0{}^T \\ \bar{C}_0 & F_0 & -I \end{bmatrix}$$

$$+\varepsilon^{-1} \begin{bmatrix} PG \\ 0 \\ H \end{bmatrix} \begin{bmatrix} G^T P & 0 & H^T \end{bmatrix} + \varepsilon \begin{bmatrix} I + K^T J^T \\ R^T \\ 0 \end{bmatrix} I + JK \quad R \quad 0$$

- Study the right side of the above MI

$$\begin{bmatrix} \bar{A}_0^T P + P\bar{A}_0 & PE_0 & \bar{C}_0^T \\ E_0^T P & -\gamma^2 & F_0^T \\ \bar{C}_0 & F_0 & -I \end{bmatrix} + \varepsilon^{-1} \begin{bmatrix} PG \\ 0 \\ H \end{bmatrix} \begin{bmatrix} G^T P & 0 & H^T \end{bmatrix} + \varepsilon \begin{bmatrix} I + K^T J^T \\ R^T \\ 0 \end{bmatrix} \begin{matrix} I + JK & R & 0 \end{matrix}$$

$$= \begin{bmatrix} \bar{A}_0^T P + P\bar{A}_0 & PE_0 & \bar{C}_0^T \\ E_0^T P & -\gamma^2 & F_0^T \\ \bar{C}_0 & F_0 & -I \end{bmatrix} - \begin{bmatrix} PG & I + K^T J^T \\ 0 & R^T \\ H & 0 \end{bmatrix} \begin{bmatrix} -\varepsilon^{-1} I & 0 \\ 0 & -\varepsilon I \end{bmatrix} \begin{bmatrix} G^T P & 0 & H^T \\ I + JK & R & 0 \end{bmatrix}$$

Thus, by the Schur complement

$$\begin{bmatrix} \bar{A}_0^T P + P\bar{A}_0 & PE_0 & \bar{C}_0^T \\ E_0^T P & -\gamma^2 I & F_0^T \\ \bar{C}_0 & F_0 & -I \end{bmatrix} + \varepsilon^{-1} \begin{bmatrix} PG \\ 0 \\ H \end{bmatrix} \begin{bmatrix} G^T P & 0 & H^T \end{bmatrix} + \varepsilon \begin{bmatrix} I + K^T J^T \\ R^T \\ 0 \end{bmatrix} \begin{matrix} I + JK & R & 0 \end{matrix} < 0$$

$$\Leftrightarrow \begin{bmatrix} \bar{A}_0^T P + P\bar{A}_0 & PE_0 & \bar{C}_0^T & PG & I + K^T J^T \\ E_0^T P & -\gamma^2 I & F_0^T & 0 & R^T \\ \bar{C}_0 & F_0 & -I & H & 0 \\ G^T P & 0 & H^T & -\varepsilon I & 0 \\ I + JK & R & 0 & 0 & -\varepsilon^{-1} I \end{bmatrix} < 0$$

- Doing a state transformation leads to

$$\begin{bmatrix} \bar{A}_0^T P + P\bar{A}_0 & PE_0 & \bar{C}_0^T & PG & I + K^T J^T \\ E_0^T P & -\gamma^2 & F_0^T & 0 & R^T \\ \bar{C}_0 & F_0 & -I & H & 0 \\ G^T P & 0 & H^T & -\varepsilon I & 0 \\ I + JK & R & 0 & 0 & -\varepsilon^{-1} I \end{bmatrix} < 0, P > 0 \Leftrightarrow$$

$$\begin{bmatrix} Y\bar{A}_0^T + \bar{A}_0 Y & E_0 & Y\bar{C}_0^T & G & Y + YK^T J^T \\ E_0^T & -\gamma^2 & F_0^T & 0 & R^T \\ \bar{C}_0 Y & F_0 & -I & H & 0 \\ G^T & 0 & H^T & -\varepsilon I & 0 \\ Y + JKY & R & 0 & 0 & -\varepsilon^{-1} I \end{bmatrix} < 0, Y = P^{-1} > 0$$

- Set

$$K = \bar{K}P$$

we finally have

$$\begin{bmatrix} YA_0^T + A_0Y + B_0\bar{K} + \bar{K}^T B_0^T & E_0 & YC_0^T + \bar{K}^T D_0^T & G & Y + \bar{K}^T J^T \\ E_0^T & -\gamma^2 & F_0^T & 0 & R^T \\ C_0Y + D_0\bar{K} & F_0 & -I & H & 0 \\ G^T & 0 & H^T & -\varepsilon I & 0 \\ Y + J\bar{K} & R & 0 & 0 & -\varepsilon^{-1} I \end{bmatrix} < 0, Y = P^{-1} > 0 \Leftrightarrow$$

$$\begin{bmatrix} YA_0^T + A_0Y + B_0\bar{K} + \bar{K}^T B_0^T & E_0 & YC_0^T + \bar{K}^T D_0^T & \lambda G & Y + \bar{K}^T J^T \\ E_0^T & -\gamma^2 & F_0^T & 0 & R^T \\ C_0Y + D_0\bar{K} & F_0 & -I & \lambda H & 0 \\ \lambda G^T & 0 & \lambda H^T & -\lambda I & 0 \\ Y + J\bar{K} & R & 0 & 0 & -\lambda I \end{bmatrix} < 0, Y = P^{-1} > 0, \lambda = \varepsilon^{-1} > 0$$

The controller design is reduced to find a solution for the above LMI for

$$\bar{K}, Y(P^{-1}) > 0, \lambda > 0$$

$$\frac{1}{\varepsilon}\begin{bmatrix} PG \\ 0 \\ H \end{bmatrix}\begin{bmatrix} G^T P & 0 & H^T \end{bmatrix} + \varepsilon \begin{bmatrix} I + K^T J^T \\ R^T \\ 0 \end{bmatrix} \begin{matrix} I + JK & R & 0 \end{matrix} + \begin{bmatrix} 0 & 0 & 0 \\ 0 & -\gamma^2 & 0 \\ 0 & 0 & -I \end{bmatrix} < 0 \Leftrightarrow$$

$$\begin{bmatrix} \varepsilon\ I + K^T J^T + JK & \varepsilon\ I + K^T J^T\ R & \frac{1}{\varepsilon} PGH^T & PG & K^T J^T \\ \varepsilon R^T\ I + JK & \varepsilon R^T R - \gamma^2 & 0 & 0 & 0 \\ \frac{1}{\varepsilon} HG^T P & 0 & \frac{1}{\varepsilon} HH^T - I & 0 & 0 \\ G^T P & 0 & 0 & -\varepsilon & 0 \\ JK & 0 & 0 & 0 & -\frac{1}{\varepsilon} \end{bmatrix} < 0$$

- Controller design is to solve the above LMI for

$$P > 0, K, \varepsilon > 0$$

16.3 Tricks in LMI aided design *

- Application of the relation

$$TRT^T > 0(<0) \Leftrightarrow R > 0(<0), T: \text{full rank}$$

$$\begin{bmatrix} (A+BK)^T P + P(A+BK) & PE_d \\ E_d{}^T P & -I \end{bmatrix} < 0$$

$$\Leftrightarrow \begin{bmatrix} P^{-1}(A+BK)^T + (A+BK)P^{-1} & E_d \\ E_d{}^T & -I \end{bmatrix} < 0$$

$$\begin{bmatrix} (A+BK)^T P + P(A+BK) & PE_d \\ E_d{}^T P & -I \end{bmatrix} < 0$$

$$P^{-1} = X \Rightarrow \begin{bmatrix} X(A+BK)^T + (A+BK)X & E_d \\ E_d{}^T & -I \end{bmatrix} < 0$$

* S. Skogestad and I. Postlethwaite, Multivariable feedback control, Wiley, second edition, 2005

- Change of variables

$$\begin{bmatrix} X(A+BK)^T + (A+BK)X & E_d \\ E_d^{\ T} & -I \end{bmatrix} < 0$$

$$K = YX^{-1} \Rightarrow \begin{bmatrix} XA^T + Y^T B^T + AX + BY & E_d \\ E_d^{\ T} & -I \end{bmatrix} < 0$$

- Application of Schur complement:

$$\begin{bmatrix} \bar{A}_0^{\ T} P + P\bar{A}_0 & PE_0 & \bar{C}_0^{\ T} \\ E_0^{\ T} P & -\gamma^2 & F_0^{\ T} \\ \bar{C}_0 & F_0 & -I \end{bmatrix} + \varepsilon^{-1} \begin{bmatrix} PG \\ 0 \\ H \end{bmatrix} \begin{bmatrix} G^T P & 0 & H^T \end{bmatrix} + \varepsilon \begin{bmatrix} I + K^T J^T \\ R^T \\ 0 \end{bmatrix} \begin{matrix} I + JK & R & 0 \end{matrix}$$

$$= \begin{bmatrix} \bar{A}_0^{\ T} P + P\bar{A}_0 & PE_0 & \bar{C}_0^{\ T} \\ E_0^{\ T} P & -\gamma^2 & F_0^{\ T} \\ \bar{C}_0 & F_0 & -I \end{bmatrix} - \begin{bmatrix} PG & I + K^T J^T \\ 0 & R^T \\ H & 0 \end{bmatrix} \begin{bmatrix} -\varepsilon^{-1} I & 0 \\ 0 & -\varepsilon I \end{bmatrix} \begin{bmatrix} G^T P & 0 & H^T \\ I + JK & R & 0 \end{bmatrix}$$

Thus, by the Schur complement

$$\begin{bmatrix} \bar{A}_0^T P + P\bar{A}_0 & PE_0 & \bar{C}_0^T \\ E_0^T P & -\gamma^2 & F_0^T \\ \bar{C}_0 & F_0 & -I \end{bmatrix} - \begin{bmatrix} PG & I + K^T J^T \\ 0 & R^T \\ H & 0 \end{bmatrix} \begin{bmatrix} -\varepsilon^{-1} I & 0 \\ 0 & -\varepsilon I \end{bmatrix} \begin{bmatrix} G^T P & 0 & H^T \\ I + JK & R & 0 \end{bmatrix}$$

$$\Leftrightarrow \begin{bmatrix} \bar{A}_0^T P + P\bar{A}_0 & PE_0 & \bar{C}_0^T & PG & I + K^T J^T \\ E_0^T P & -\gamma^2 I & F_0^T & 0 & R^T \\ \bar{C}_0 & F_0 & -I & H & 0 \\ G^T P & 0 & H^T & -\varepsilon I & 0 \\ I + JK & R & 0 & 0 & -\varepsilon^{-1} I \end{bmatrix} < 0$$

- The S-procedure

It can be applied to solve the problem

$$F_o(x) \le 0 : F_o(x) = x^T Ax + 2bx + c, \text{quadratic function of x}$$

$$\text{whenever } F_i(x) \ge 0, F_i(x) = x^T A_i x + 2b_i x + c_i$$

$$\Rightarrow F_o(x) + \sum_{i=1}^{p} \gamma_i F_i(x) \le 0, \gamma_i \ge 0$$

$$\begin{bmatrix} x \\ z \end{bmatrix}^T \begin{bmatrix} (A+BK)^T P + P(A+BK) & PE_d \\ E_d{}^T P & -I \end{bmatrix} \begin{bmatrix} x \\ z \end{bmatrix} \le 0$$

subject to $z^T z \le x^T C^T C x$

$$x^T C^T C x - z^T z \ge 0 \Rightarrow$$

$$\begin{bmatrix} x \\ z \end{bmatrix}^T \begin{bmatrix} (A+BK)^T P + P(A+BK) & PE_d \\ E_d{}^T P & -I \end{bmatrix} \begin{bmatrix} x \\ z \end{bmatrix} \le 0$$

$$\begin{bmatrix} x \\ z \end{bmatrix}^T \begin{bmatrix} C^T C & 0 \\ 0 & -I \end{bmatrix} \begin{bmatrix} x \\ z \end{bmatrix} \ge 0$$

$$\Rightarrow \begin{bmatrix} x \\ z \end{bmatrix}^T \begin{bmatrix} (A+BK)^T P + P(A+BK) & PE_d \\ E_d{}^T P & -I \end{bmatrix} \begin{bmatrix} x \\ z \end{bmatrix} + \alpha \begin{bmatrix} x \\ z \end{bmatrix}^T \begin{bmatrix} C^T C & 0 \\ 0 & -I \end{bmatrix} \begin{bmatrix} x \\ z \end{bmatrix} \le 0$$

$$\Leftrightarrow \begin{bmatrix} (A+BK)^T P + P(A+BK) + \alpha C^T C & PE_d \\ E_d{}^T P & -(1+\alpha) I \end{bmatrix} \le 0, \alpha \ge 0$$

17. Loop transfer recovery

17.1 Motivation and the standard problem formulations

The LQ controller (all state variables are measurable, and an observer is not needed) guarantees good control performance (stability margin etc.)

By means of loop transfer recovery (LTR) schemes, the poor performance caused by the application of an observer (estimation of state variables instead of a direct measurement) will be “recovered” *.

The dynamics of the controller/actuator, in case of full measurement of state variables, is governed by

$$M = (A + BF, B, F, I) \quad \text{Input sensitivity}$$

The RCF – a state feedback interpretation

$$\begin{cases} \dot{x} = Ax + Bu \\ y = Cx + Du \end{cases} \xrightarrow{u := Fx + v} \begin{cases} \dot{x} = Ax + B(v + Fx) = (A + BF)x + Bv \\ u = Fx + v \\ y = Cx + D(v + Fx) = (C + DF)x + Dv \end{cases}$$

$$\Rightarrow \begin{cases} u = Mv, & M = (A + BF, B, F, I) \\ y = Nv, & N = (A + BF, B, C + DF, D) \end{cases}$$

* Reference: T.-T. Tay et al., Section 4.3, *High Performance Control,* © Springer Science+Business Media New York 1998

The dynamics of the controller/actuator, in case of output feedback control

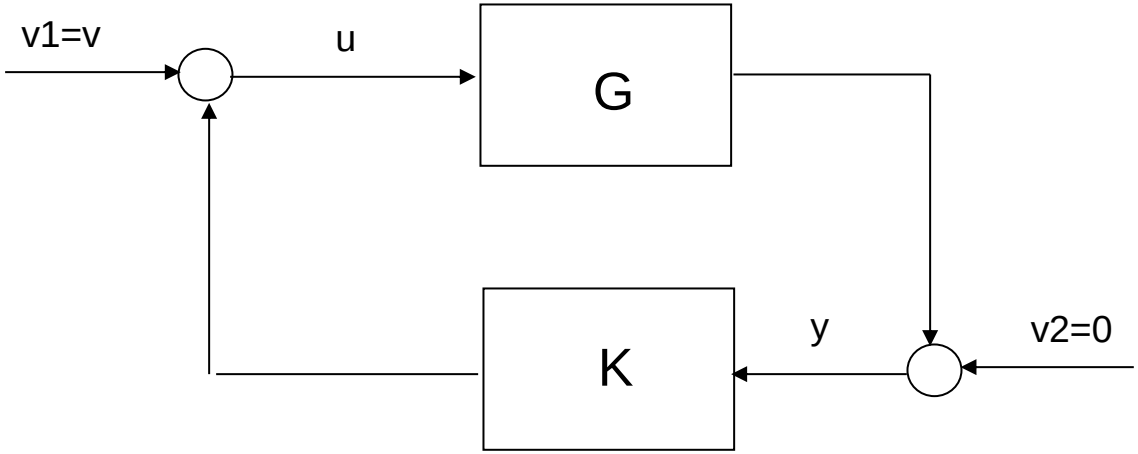

$$\begin{bmatrix} u \\ y \end{bmatrix} = \begin{bmatrix} \left(I - K(s)G(s)\right)^{-1} \\ G(s)\left(I - K(s)G(s)\right)^{-1} \end{bmatrix} v = \begin{bmatrix} M \\ N \end{bmatrix} \left(M - K(s)N\right)^{-1} v$$

$$K(s) = -(X - Q\hat{N})^{-1}(Y + Q\hat{M}) = -\hat{V}^{-1}(s)\hat{U}(s)$$

$$\Rightarrow \begin{bmatrix} u \\ y \end{bmatrix} = \begin{bmatrix} M \\ N \end{bmatrix} \left(\hat{V}M + \hat{U}N\right)^{-1} \hat{V}v = \begin{bmatrix} M \\ N \end{bmatrix} \hat{V}v = \begin{bmatrix} M \\ N \end{bmatrix} (X - Q\hat{N})v$$

The basic idea of LTR is to minimize

$$\min_{Q \in RH_\infty} \left\| M - M\hat{V} \right\| = \min_{Q \in RH_\infty} \left\| M - MX + MQ\hat{N} \right\| : \text{an MMP}$$

The dual form to the input sensitivity recovery, output sensitivity recovery

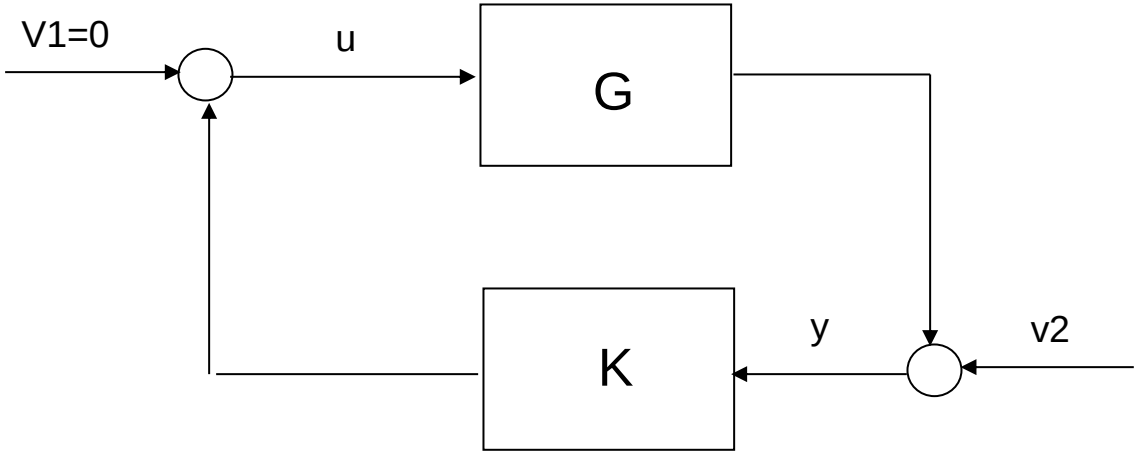

$$\begin{bmatrix} u \\ y \end{bmatrix} = \begin{bmatrix} K(s)\left(I - G(s)K(s)\right)^{-1} \\ \left(I - G(s)K(s)\right)^{-1} \end{bmatrix} v_2 = \begin{bmatrix} U \\ V \end{bmatrix} \left(\hat{M}V + \hat{N}U\right)^{-1} \hat{M}v_2$$

$$K(s) = -(\hat{Y} + MQ)(\hat{X} - NQ)^{-1} = -U(s)V^{-1}(s)$$

$$\Rightarrow \begin{bmatrix} u \\ y \end{bmatrix} = \begin{bmatrix} U \\ V \end{bmatrix} \hat{M}v_2 = \begin{bmatrix} \hat{Y} + MQ \\ \hat{X} - NQ \end{bmatrix} \hat{M}v_2$$

Output sensitivity recovery

$$\min_{Q \in RH_\infty} \left\| \hat{M} - \left(\hat{X} - NQ\right)\hat{M} \right\| = \min_{Q \in RH_\infty} \left\| \hat{M} - \hat{X}\hat{M} + NQ\hat{M} \right\| : \text{an MMP}$$

17.2 Motivation for a different formulation of LTR

The general interpretation in textbooks

$$M - MX + MQ\hat{N} = M\left(I - \left(X - Q\hat{N}\right)\right), I - \left(X - Q\hat{N}\right) = \left(I - M^{-1}\right)\left(I - KG\right)^{-1} + I - \left(I - KG\right)^{-1}$$

$$I - M^{-1} = F\left(sI - A\right)^{-1} B, I - \left(I - KG\right)^{-1} = -KG\left(I - KG\right)^{-1} \Rightarrow$$

$$M - MX + MQ\hat{N} = M\underbrace{\left(F\left(sI - A\right)^{-1} B - KG\right)}_{\text{loop gain transfer function error}}\left(I - KG\right)^{-1}$$

weighting transfer matrices

$F\left(sI - A\right)^{-1} B$: the ideal TF from x to u

KG: the real TF from y to u

On the other hand,

$$\min_{Q \in RH_\infty} \left\| M - MX + MQ\hat{N} \right\| \Rightarrow X - Q\hat{N} \Rightarrow I$$

$$X - Q\hat{N} = (A - LC, -(B - LD), F, I) - Q(A - LC, B - LD, C, D)$$

$$\Rightarrow \left(F + Q(s)C\right)\left(sI - A + LC\right)^{-1}\left(B - LD\right) + Q(s)D \Rightarrow 0$$

It is contradict to the robustness against system uncertainties, where it is required

$X - Q\hat{N}$ is as small as possible

The contradiction is caused by handling tracking behaviors using feedback! In fact, the tracking dynamics can be well dealt with by a feed-forward controller.

The feedback controller is applied to enhancing the robustness. This is also the original idea of LQ-control.

Our formulation:

Given an ideal closed-loop dynamics

$$\dot{x}_{ideal} = \left(A + BF\right)x_{ideal}, u_{ideal} = Fx_{ideal}, y_{ideal} = \left(C + DF\right)x_{ideal}$$

find a controller, *u(s)=K(s)y(s),* so that u_{ideal}-u,y_{ideal}-y are minimized.

Loop transfer recovery in sense of “robustness”: recover the robustness.

17.3 Solution of the newly formulated LTR

Recall that

$$u(s) = K(s)y(s) \Leftrightarrow u(s) = F\hat{x}(s) - Q(s)r(s)$$

$$\text{Observer}: \dot{\hat{x}} = \left(A + BF\right)\hat{x} + Bu + Lr, r = y - \hat{y} = y - C\hat{x} - Du$$

The difference in u (the ideal – the real):

$$e_u = Fx_{ideal} - u = Fx_{ideal} - F\hat{x} + Qr = F\tilde{x} + Qr, \tilde{x} = x_{ideal} - \hat{x}$$

$$\dot{\tilde{x}} = \left(A + BF\right)\tilde{x} + \left(BQ - L\right)r \Rightarrow e_u = \left(F\left(sI - A - BF\right)^{-1}\left(BQ - L\right) + Q\right)r$$

Since r represents the uncertainty in the system, and

$$F\left(sI - A - BF\right)^{-1}\left(BQ - L\right) + Q = MQ + \hat{Y}, \hat{Y} = (A + BF, -L, F, O)$$

$$\Rightarrow e_u(s) = \left(MQ + \hat{Y}\right)r(s)$$

The difference in y (the ideal – the real):

$$e_y := y_{idea} - y = y_{ideal} - \hat{y} - \left(y - \hat{y}\right) = y_{ideal} - \hat{y} - r$$

$$e_y = \left(C + DF\right)\tilde{x} + DQr, \tilde{x} = x_{ideal} - \hat{x}, \dot{\tilde{x}} = \left(A + BF\right)\tilde{x} + \left(BQ - L\right)r \Rightarrow$$

$$e_y = \left(\left(C + DF\right)\left(sI - A - BF\right)^{-1}\left(BQ - L\right) + DQ\right)r - r$$

$$= \left(NQ - \hat{X}\right)r, \hat{X} = (A + BF, L, C + DF, I)$$

Recovery both in y and u

$$\begin{bmatrix} e_u \\ e_y \end{bmatrix} = \begin{bmatrix} \hat{Y} + MQ \\ NQ - \hat{X} \end{bmatrix} r, Q \in RH_\infty \Rightarrow$$

$$\min_{Q \in RH_\infty} \left\| \begin{matrix} \hat{Y} + MQ \\ NQ - \hat{X} \end{matrix} \right\| \Leftrightarrow \min_{Q \in RH_\infty} \left\| \begin{matrix} \hat{Y} + MQ \\ NQ - \hat{X} \end{matrix} \right\|_\infty \rightarrow \text{increasing stability margin}$$

The problem of recovering both in y and u is equivalent with robust controller design for maximizing stability margin.

17.4 The dual result

$$u(s) = K(s)y(s) \Leftrightarrow u(s) = F\hat{x}(s) - Q(s)r(s)$$

$$\text{Observer}: \dot{\hat{x}} = \left(A - LC\right)\hat{x} + \left(B - LD\right)u + Ly$$

The difference in u an y (the ideal – the real):

$$e_u = Fx_{ideal} - F\hat{x} + Qr = F\tilde{x} + Q\left(y - y_{ideal}\right) + Q\left(y_{ideal} - \hat{y}\right)$$

$$\tilde{x} = x_{ideal} - \hat{x}, y_{ideal} - \hat{y} = C\tilde{x} + De_u, e_y = y_{ideal} - y$$

$$\dot{\tilde{x}} = \left(A - LC\right)\tilde{x} + \left(B - LD\right)e_u + Le_y \Rightarrow$$

$$e_u = F\left(sI - A + LC\right)^{-1}\left(\left(B - LD\right)e_u + Le_y\right)$$

$$+Q(s)\left(C\left(sI - A + LC\right)^{-1}\left(\left(B - LD\right)e_u + Le_y\right) + De_u\right) - Qe_y$$

$$\left(X(s) - Q(s)\hat{N}(s)\right)e_u = -\left(Y(s) + Q(s)\hat{M}\right)e_y$$

On the other hand,

$$\dot{e}_x = Ae_x + Be_u, e_y = Ce_x + De_u, e_x = x_{ideal} - x$$

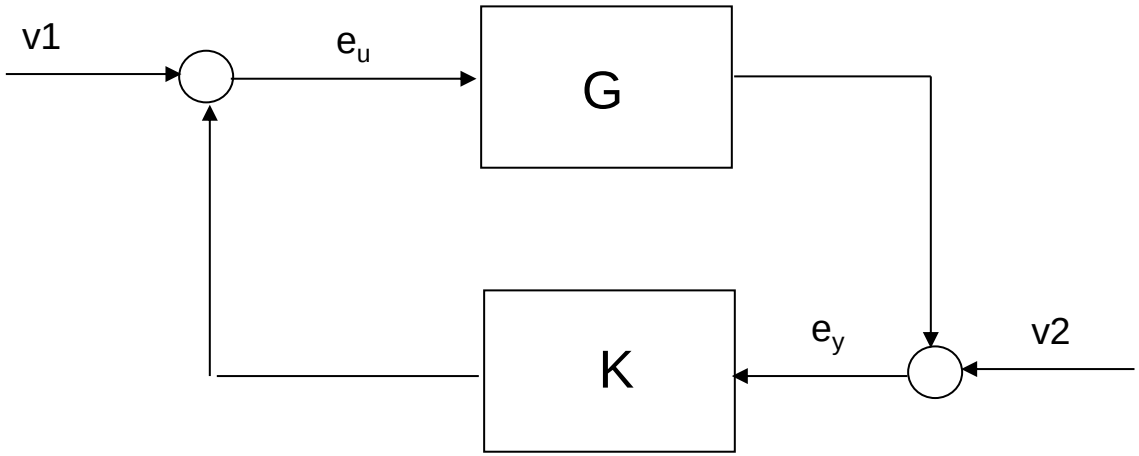

$$e_u = -\left(X(s) - Q(s)\hat{N}(s)\right)^{-1}\left(Y(s) + Q(s)\hat{M}\right) = K(s)e_y$$

$$e_y = \left(C\left(sI - A\right)^{-1}B + D\right)^{-1} e_u = G(s)e_u$$

$$\begin{bmatrix} e_u \\ e_y \end{bmatrix} = \begin{bmatrix} \left(I - K(s)G(s)\right)^{-1} & K(s)\left(I - G(s)K(s)\right)^{-1} \\ G(s)\left(I - K(s)G(s)\right)^{-1} & \left(I - G(s)K(s)\right)^{-1} \end{bmatrix} \begin{bmatrix} v_1 \\ v_2 \end{bmatrix}$$

$$= \begin{bmatrix} M \\ N \end{bmatrix} \begin{bmatrix} X - Q\hat{N} & Y + Q\hat{M} \end{bmatrix} \begin{bmatrix} v_1 \\ v_2 \end{bmatrix}$$

$$\min_Q \left\| \begin{bmatrix} X - Q\hat{N} & Y + Q\hat{M} \end{bmatrix} \right\| \Rightarrow \min \left\| \begin{bmatrix} e_u \\ e_y \end{bmatrix} \right\|$$

Feedback control problem can also be understood as reducing the difference between the ideal state feedback solution and its estimation!

This is another aspect of the separation principle

- finding a perfect state feedback control law
- achieving the best estimation of the control law

The spirit of robust control, and feedback control.

18. Gap metric, robustness and controller design

18.1 Motivation

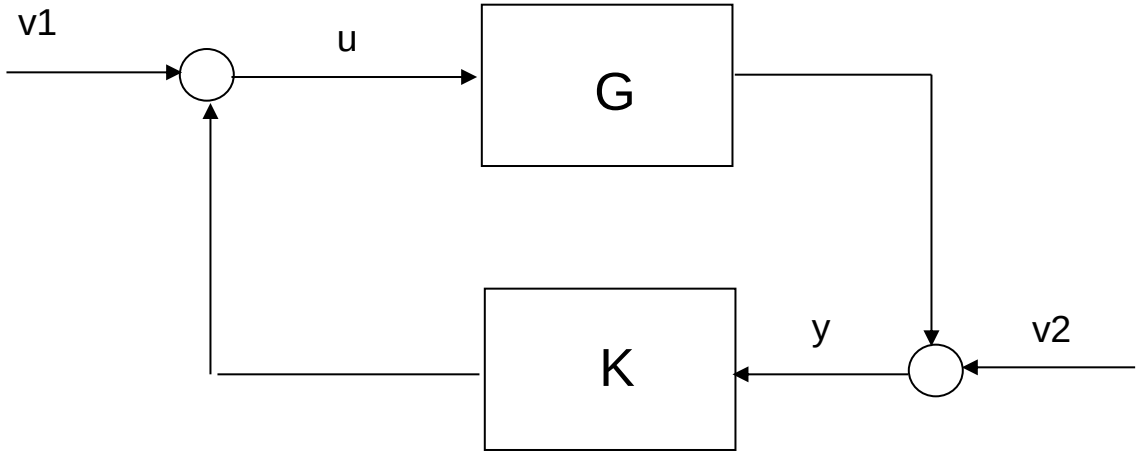

A (feedback) controller can stabilize (infinitively many) number of plants, which are parametrized by

$$for\ K = UV^{-1} = \hat{V}^{-1}\hat{U}$$

$$Then: y = -(\hat{Y}_K + VS)(\hat{X}_K - US)^{-1}u = -(X_K - S\hat{U})^{-1}(Y_K + S\hat{V})u \qquad S \in RH_\infty$$

Suppose that K can stabilize G_1. Then, it is of interest to know whether K can Also stabilize G_2 when G_2 is “very close” to G_1.

18.2 Definitions

Given

$$G_1(s) = N_1(s)M_1^{-1}(s) \in LR^{m\times p}, G_2(s) = N_2(s)M_2^{-1}(s) \in LR^{m\times p} \Rightarrow$$

$$SIR_{G_1} = \begin{bmatrix} M_1(s) \\ N_1(s) \end{bmatrix}, SIR_{G_2} = \begin{bmatrix} M_2(s) \\ N_2(s) \end{bmatrix}$$

$$M_i(s), N_i(s) \text{ is normalized: } \begin{bmatrix} M_i(s) \\ N_i(s) \end{bmatrix}^* \begin{bmatrix} M_i(s) \\ N_i(s) \end{bmatrix} = M_i^*(s)M_i(s) + N_i^*(s)N_i(s) = I$$

$$\vec{\delta}\left(G_i, G_j\right) = \inf_{Q\in H_\infty} \left\| \begin{bmatrix} M_i(s) \\ N_i(s) \end{bmatrix} - \begin{bmatrix} M_j(s) \\ N_j(s) \end{bmatrix} Q(s) \right\|_\infty, i, j = 1, 2$$

$$\delta\left(G_i, G_j\right) = \max\left\{\vec{\delta}\left(G_1, G_2\right), \vec{\delta}\left(G_2, G_1\right)\right\} \in [0,1]$$

Gap metric is a measurement for
"how close" are two dynamic systems?

$$\delta\left(G_1, G_2\right) = 0 : G_2 \text{ is identical with } G_1, \delta\left(G_1, G_2\right) = 1 : \text{ totally different}$$

$$\begin{bmatrix} u_1 \\ y_1 \end{bmatrix} = \begin{bmatrix} M_1(s) \\ N_1(s) \end{bmatrix} v_1, \begin{bmatrix} u_2 \\ y_2 \end{bmatrix} = \begin{bmatrix} M_2(s) \\ N_2(s) \end{bmatrix} v_2, v_1, v_2 \in H_2$$

$$\mathbf{G}_1 = \left\{ \begin{bmatrix} u_1 \\ y_1 \end{bmatrix} \in H_2 \right\}, \mathbf{G}_2 = \left\{ \begin{bmatrix} u_2 \\ y_2 \end{bmatrix} \in H_2 \right\}$$

$$\vec{\delta}\left(G_1, G_2\right) = \sup_{\begin{bmatrix} u_1 \\ y_1 \end{bmatrix} \in \mathbf{G}_1} \inf_{\begin{bmatrix} u_2 \\ y_2 \end{bmatrix} \in \mathbf{G}_1} \frac{\left\| \begin{bmatrix} u_1 \\ y_1 \end{bmatrix} - \begin{bmatrix} u_2 \\ y_2 \end{bmatrix} \right\|_2}{\left\| \begin{bmatrix} u_1 \\ y_1 \end{bmatrix} \right\|_2}$$

Gap metric is a measurement for

“how close” are two closed subspace in Hilbert space.

How is about kernel representations?

$$\text{normalized model: } G_o(s) = \hat{M}^{-1}(s)\hat{N}(s), K = \begin{bmatrix} \hat{M} & -\hat{N} \end{bmatrix}, K^* = \begin{bmatrix} \hat{M}^* \\ -\hat{N} \end{bmatrix}, KK^* = I$$

$$\vec{\delta}_K\left(K_1, K_2\right) = \inf_Q \left\| \begin{bmatrix} \hat{M}_2 & -\hat{N}_1 \end{bmatrix} - Q \begin{bmatrix} \hat{M}_2 & -\hat{N}_1 \end{bmatrix} \right\|_\infty$$

18.3 Applications to the control systems synthesis

Given $G(s) = NM^{-1}, N, M$ normalized

then

$$\left\{G_1 : \vec{\delta}\left(G, G_1\right) < \varepsilon\right\} =$$

$$\left\{G_1 : G(s) = \left(N + \Delta_N\right)\left(M + \Delta_M\right)^{-1}, \Delta_N, \Delta_M \in RH_\infty, \left\| \begin{matrix} \Delta_M \\ \Delta_N \end{matrix} \right\|_\infty < \varepsilon, 0 < \varepsilon \le 1\right\}$$

An important application:

Given $G_1(s) = N_1(s)M_1^{-1}(s), G_2(s) = N_2(s)M_2^{-1}(s), \vec{\delta}\left(G_1, G_2\right) < \varepsilon$

Then, a controller stabilizing G_1,

$$K = -(X_1 - Q\hat{N}_1)^{-1}(Y_1 + Q\hat{M}_1), Q \in RH_\infty$$

and satisfying

$$\left\| \begin{bmatrix} X_1 - Q\hat{N}_1 & Y_1 + Q\hat{M}_1 \end{bmatrix} \right\|_\infty \le \frac{1}{\varepsilon}$$

stabilizes also G_2

Given $G(s) = \hat{M}^{-1}(s)\hat{N}(s), \hat{M}, \hat{N}$ normalized

then

$$\left\{ G_1 : \vec{\delta}_K \left(G, G_1 \right) < \varepsilon \right\} =$$

$$\left\{ G_1 : G(s) = \left(\hat{M} + \Delta_{\hat{M}} \right)^{-1} \left(\hat{N} + \Delta_{\hat{N}} \right), \Delta_{\hat{N}}, \Delta_{\hat{M}} \in RH_\infty, \left\| \Delta_{\hat{N}} \quad \Delta_{\hat{M}} \right\|_\infty < \varepsilon, 0 < \varepsilon \le 1 \right\}$$

An important application:

Given $G_1(s) = \hat{M}_1^{-1}(s)\hat{N}_1(s), G_2(s) = \hat{M}_2^{-1}(s)\hat{N}_2(s), \vec{\delta}_K \left(G_1, G_2 \right) < \varepsilon$

Then, a controller stabilizing G_1,

$$K = -(\hat{Y} + MQ)(\hat{X} - NQ)^{-1}, Q \in RH_\infty$$

and satisfying

$$\left\| \begin{bmatrix} -\hat{Y} \\ \hat{X} \end{bmatrix} - \begin{bmatrix} M \\ N \end{bmatrix} Q \right\|_\infty < \frac{1}{\varepsilon}$$

stabilizes also G_2