CHAPTER 5

Magnetostatics, Faraday's Law, Quasi-Static Fields

5.1 Introduction and Definitions

In the preceding chapters we examined various aspects of electrostatics (i.e., the fields and interactions of stationary charges and boundaries). We now turn to steady-state magnetic phenomena, Faraday's law of induction, and quasi-static fields. From a historical point of view, magnetic phenomena have been known and studied for at least as long as electric phenomena. Lodestones were known in ancient times; the mariner's compass is a very old invention; Gilbert's researches on the earth as a giant magnet date from before 1600. In contrast to electrostatics, the basic laws of magnetic fields did not follow straightforwardly from man's earliest contact with magnetic materials. The reasons are several, but they all stem from the radical difference between magnetostatics and electrostatics: *there are no free magnetic charges* (even though the idea of a magnetic charge density may be a useful mathematical construct in some circumstances). This means that magnetic phenomena are quite different from electric phenomena and that for a long time no connection was established between them. The basic entity in magnetic studies was what we now know as a magnetic dipole. In the presence of magnetic materials the dipole tends to align itself in a certain direction. That direction is by definition the direction of the magnetic-flux density, denoted by **B**, provided the dipole is sufficiently small and weak that it does not perturb the existing field. The magnitude of the flux density can be defined by the mechanical torque **N** exerted on the magnetic dipole:

$$\mathbf{N} = \boldsymbol{\mu} \times \mathbf{B} \tag{5.1}$$

where $\boldsymbol{\mu}$ is the magnetic moment of the dipole, defined in some suitable set of units.

Already, in the definition of the magnetic-flux density **B** (sometimes called the *magnetic induction*), we have a more complicated situation than for the electric field. Further quantitative elucidation of magnetic phenomena did not occur until the connection between currents and magnetic fields was established. A current corresponds to charges in motion and is described by a current density **J**, measured in units of positive charge crossing unit area per unit time, the direction of motion of the charges defining the direction of **J**. In SI units it is measured in coulombs per square meter-second or amperes per square meter. If the current density is confined to wires of small cross section, we usually integrate over the cross-sectional area and speak of a current of so many amperes flowing along the wire.

Conservation of charge demands that the charge density at any point in space be related to the current density in that neighborhood by a continuity equation:

$$\frac{\partial \rho}{\partial t} + \nabla \cdot \mathbf{J} = 0 \tag{5.2}$$

This expresses the physical fact that a decrease in charge inside a small volume with time must correspond to a flow of charge out through the surface of the small volume, since the total amount of charge must be conserved. Steady-state magnetic phenomena are characterized by no change in the net charge density anywhere in space. Consequently in magnetostatics

$$\nabla \cdot \mathbf{J} = 0 \tag{5.3}$$

We now proceed to discuss the experimental connection between current and magnetic-flux density and to establish the basic laws of magnetostatics.

5.2 *Biot and Savart Law*

In 1819 Oersted observed that wires carrying electric currents produced deflections of permanent magnetic dipoles placed in their neighborhood. Thus the currents were sources of magnetic-flux density. Biot and Savart (1820), first, and Ampère (1820–1825), in much more elaborate and thorough experiments, established the basic experimental laws relating the magnetic induction **B** to the currents and established the law of force between one current and another. Although not in the form in which Ampère deduced it, the basic relation is the following. If $d\mathbf{l}$ is an element of length (pointing in the direction of current flow) of a filamentary wire that carries a current I and $\mathbf{x}$ is the coordinate vector from the element of length to an observation point P, as shown in Fig. 5.1, then the elemental flux density $d\mathbf{B}$ at the point P is given in magnitude and direction by

$$d\mathbf{B} = kI \frac{(d\mathbf{l} \times \mathbf{x})}{|\mathbf{x}|^3} \tag{5.4}$$

It should be noted that (5.4) is an inverse square law, just as is Coulomb's law of electrostatics. However, the vector character is very different.

A word of caution about (5.4). There is a temptation to think of (5.4) as the magnetic equivalent of the electric field (1.3) of a point charge and to identify $I\, d\mathbf{l}$ as the analog of q. Strictly speaking this is incorrect. Equation (5.4) has meaning only as one element of a sum over a continuous set, the sum representing the magnetic induction of a current loop or circuit. Obviously the continuity equation (5.3) is not satisfied for the current element $I\, d\mathbf{l}$ standing alone—the

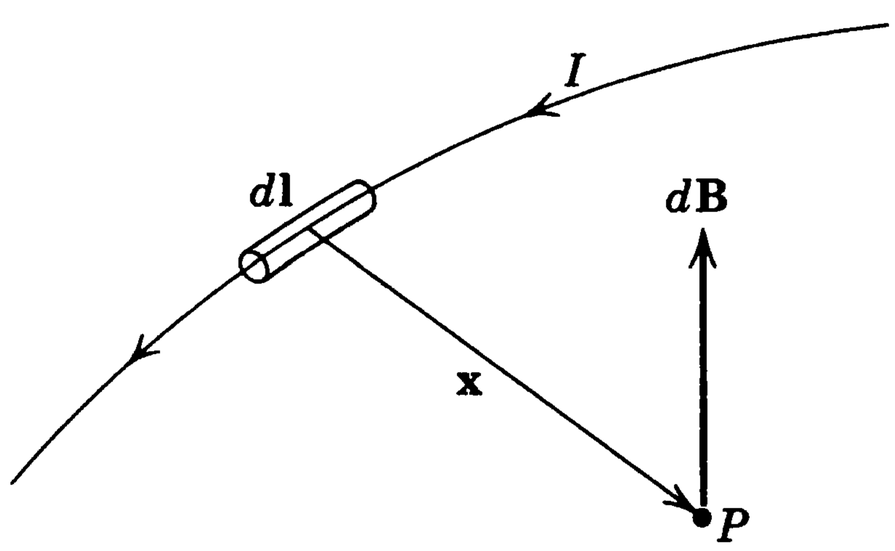

Figure 5.1 Elemental magnetic induction $d\mathbf{B}$ due to current element $I\, d\mathbf{l}$.

current comes from nowhere and disappears after traversing the length $d\mathbf{l}$! One apparent way out of this difficulty is to realize that current is actually charge in motion and to replace $I\,d\mathbf{l}$ by $q\mathbf{v}$ where q is the charge and $\mathbf{v}$ its velocity. The flux density for such a charge in motion would be

$$\mathbf{B} = kq\,\frac{\mathbf{v} \times \mathbf{x}}{|\mathbf{x}|^3} \tag{5.5}$$

in close correspondence with (5.4). But this expression is time dependent and furthermore is valid only for charges whose velocities are small compared to that of light and whose accelerations can be neglected. Since we are considering steady-state magnetic fields in this chapter, we stick with (5.4) and integrate over circuits to obtain physical results.*

In (5.4) and (5.5) the constant k depends in magnitude and dimension on the system of units used, as discussed in detail in the Appendix. In Gaussian units, in which current is measured in esu and magnetic induction in emu, the constant is empirically found to be $k = 1/c$, where c is the speed of light in vacuo. The presence of the speed of light in the equations of magnetostatics is an initial puzzlement resolved within special relativity where v/c has a natural appearance. In Gaussian units, $\mathbf{E}$ and $\mathbf{B}$ have the same dimensions: charge divided by length squared or force per unit charge.

In SI units, $k = \mu_0/4\pi = 10^{-7}$ newton per square ampere ($\mathrm{N/A^2}$) or henry per meter (H/m). Here $\mathbf{B}$ has the dimensions of newtons per ampere-meter ($\mathrm{N/A \cdot m}$) while $\mathbf{E}$ has dimensions of N/C. $\mathbf{B}$ times a speed has the same dimensions as $\mathbf{E}$. Since c is the natural speed in electromagnetism, it is no surprise that in SI units $\mathbf{E}$ and $c\mathbf{B}$ form the field-strength tensor $F^{\mu\nu}$ in a relativistic description (see Chapter 11).

We can linearly superpose the basic magnetic-flux elements (5.4) by integration to determine the magnetic-flux density due to various configurations of current-carrying wires. For example, the magnetic induction $\mathbf{B}$ of the long straight wire shown in Fig. 5.2 carrying a current I can be seen to be directed along the normal to the plane containing the wire and the observation point, so that the lines of magnetic induction are concentric circles around the wire. The magnitude of $\mathbf{B}$ is given by

$$|\mathbf{B}| = \frac{\mu_0}{4\pi} IR \int_{-\infty}^{\infty} \frac{dl}{(R^2 + l^2)^{3/2}} = \frac{\mu_0}{2\pi}\frac{I}{R} \tag{5.6}$$

where R is the distance from the observation point to the wire. This is the experimental result first found by Biot and Savart and is known as the Biot–Savart law. Note that the magnitude of the induction $\mathbf{B}$ varies with R in the same way as the electric field due to a long line charge of uniform linear-charge density.

*There is an apparent inconsistency here. Currents are, after all, charges in motion. How can (5.4), integrated, yield exact results yet (5.5) be only approximate? The answer is that (5.5) applies to only one charge. If a system of many charges moves in such a way that as the unit of charge goes to zero and the number of charges goes to infinity it produces a steady current flow, then the sum of the exact relativistic fields, *including acceleration effects*, gives a magnetostatic field equal to the field obtained by integrating (5.4) over the circuit. This rather subtle result is discussed for some special situations in Problems 14.23 and 14.24.

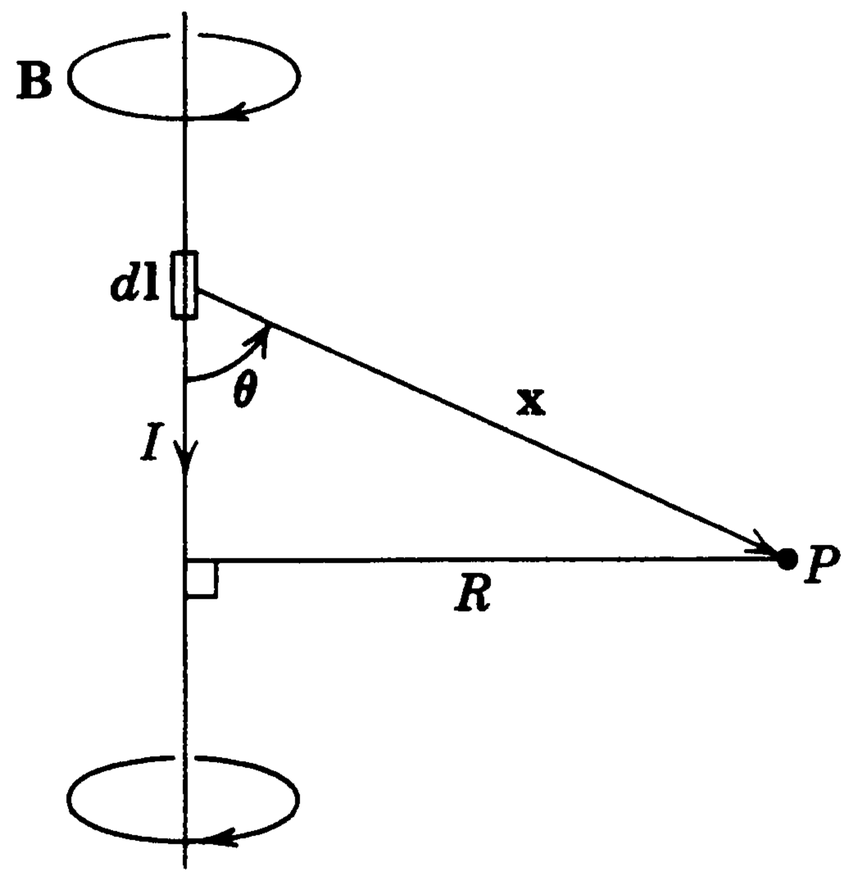

Figure 5.2

This analogy shows that in some circumstances there may be a correspondence between electrostatic and magnetostatic problems, even though the vector character of the fields is different. We see more of that in later sections.

Ampère's experiments did not deal directly with the determination of the relation between currents and magnetic induction, but were concerned rather with the force that one current-carrying wire experiences in the presence of another. Since we have already introduced the idea that a current element produces a magnetic induction, we phrase the force law as the force experienced by a current element $I_1\, d\mathbf{l}_1$ in the presence of a magnetic induction $\mathbf{B}$. The elemental force is

$$d\mathbf{F} = I_1\, (d\mathbf{l}_1 \times \mathbf{B}) \tag{5.7}$$

If the external field $\mathbf{B}$ is due to a closed current loop #2 with current I_2, then the total force which a closed current loop #1 with current I_1 experiences is [from (5.4) and (5.7)]:

$$\mathbf{F}_{12} = \frac{\mu_0}{4\pi} I_1 I_2 \oint \oint \frac{d\mathbf{l}_1 \times (d\mathbf{l}_2 \times \mathbf{x}_{12})}{|\mathbf{x}_{12}|^3} \tag{5.8}$$

The line integrals are taken around the two loops; $\mathbf{x}_{12}$ is the vector distance from line element $d\mathbf{l}_2$ to $d\mathbf{l}_1$, as shown in Fig. 5.3. This is the mathematical statement of Ampère's observations about forces between current-carrying loops. By manipulating the integrand it can be put in a form that is symmetric in $d\mathbf{l}_1$ and $d\mathbf{l}_2$ and that explicitly satisfies Newton's third law. Thus

$$\frac{d\mathbf{l}_1 \times (d\mathbf{l}_2 \times \mathbf{x}_{12})}{|\mathbf{x}_{12}|^3} = -(d\mathbf{l}_1 \cdot d\mathbf{l}_2)\, \frac{\mathbf{x}_{12}}{|\mathbf{x}_{12}|^3} + d\mathbf{l}_2 \left(\frac{d\mathbf{l}_1 \cdot \mathbf{x}_{12}}{|\mathbf{x}_{12}|^3} \right) \tag{5.9}$$

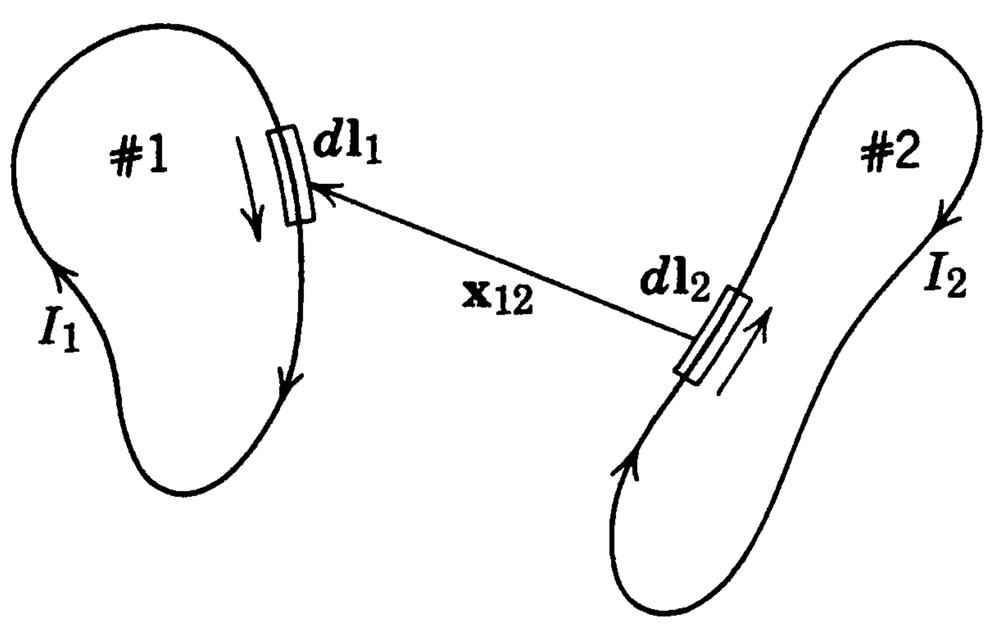

Figure 5.3 Two Ampèrian current loops.

The second term involves a perfect differential in the integral over $d\mathbf{l}_1$. Consequently it gives no contribution to the integral (5.8), provided the paths are closed or extend to infinity. Then Ampère's law of force between current loops becomes

$$\mathbf{F}_{12} = -\frac{\mu_0}{4\pi} I_1 I_2 \oint \oint \frac{(d\mathbf{l}_1 \cdot d\mathbf{l}_2)\mathbf{x}_{12}}{|\mathbf{x}_{12}|^3} \tag{5.10}$$

showing symmetry in the integration, apart from the necessary vectorial dependence on $\mathbf{x}_{12}$.

Each of two long, parallel, straight wires a distance d apart, carrying currents I_1 and I_2, experiences a force per unit length directed perpendicularly toward the other wire and of magnitude,

$$\frac{dF}{dl} = \frac{\mu_0}{2\pi} \frac{I_1 I_2}{d} \tag{5.11}$$

The force is attractive (repulsive) if the currents flow in the same (opposite) directions. The forces that exist between current-carrying wires can be used to define magnetic-flux density in a way that is independent of permanent magnetic dipoles.* We will see later that the torque expression (5.1) and the force result (5.7) are intimately related.

If a current density $\mathbf{J}(\mathbf{x})$ is in an external magnetic-flux density $\mathbf{B}(\mathbf{x})$, the elementary force law implies that the total force on the current distribution is

$$\mathbf{F} = \int \mathbf{J}(\mathbf{x}) \times \mathbf{B}(\mathbf{x})\, d^3x \tag{5.12}$$

Similarly the total torque is

$$\mathbf{N} = \int \mathbf{x} \times (\mathbf{J} \times \mathbf{B})\, d^3x \tag{5.13}$$

These general results will be applied to localized current distributions in Section 5.7.

5.3 *Differential Equations of Magnetostatics and Ampère's Law*

The basic law (5.4) for the magnetic induction can be written down in general form for a current density $\mathbf{J}(\mathbf{x})$:

$$\mathbf{B}(\mathbf{x}) = \frac{\mu_0}{4\pi} \int \mathbf{J}(\mathbf{x}') \times \frac{\mathbf{x} - \mathbf{x}'}{|\mathbf{x} - \mathbf{x}'|^3}\, d^3x' \tag{5.14}$$

This expression for $\mathbf{B}(\mathbf{x})$ is the magnetic analog of electric field in terms of the charge density:

$$\mathbf{E}(\mathbf{x}) = \frac{1}{4\pi\epsilon_0} \int \rho(\mathbf{x}') \frac{\mathbf{x} - \mathbf{x}'}{|\mathbf{x} - \mathbf{x}'|^3}\, d^3x' \tag{5.15}$$

Just as this result for $\mathbf{E}$ was not as convenient in some situations as differential equations, so (5.14) is not the most useful form for magnetostatics, even though it contains in principle a description of all the phenomena.

*In fact, (5.11) is the basis of the internationally accepted standard of current. See the Appendix.

To obtain the differential equations equivalent to (5.14), we use the relation just above (1.15) to transform (5.14) into the form:

$$\mathbf{B}(\mathbf{x}) = \frac{\mu_0}{4\pi} \nabla \times \int \frac{\mathbf{J}(\mathbf{x}')}{|\mathbf{x} - \mathbf{x}'|} d^3x' \tag{5.16}$$

From (5.16) it follows immediately that the divergence of **B** vanishes:

$$\nabla \cdot \mathbf{B} = 0 \tag{5.17}$$

This is the first equation of magnetostatics and corresponds to $\nabla \times \mathbf{E} = 0$ in electrostatics. By analogy with electrostatics we now calculate the curl of **B**:

$$\nabla \times \mathbf{B} = \frac{\mu_0}{4\pi} \nabla \times \nabla \times \int \frac{\mathbf{J}(\mathbf{x}')}{|\mathbf{x} - \mathbf{x}'|} d^3x' \tag{5.18}$$

With the identity $\nabla \times (\nabla \times \mathbf{A}) = \nabla(\nabla \cdot \mathbf{A}) - \nabla^2\mathbf{A}$ for an arbitrary vector field **A**, expression (5.18) can be transformed into

$$\nabla \times \mathbf{B} = \frac{\mu_0}{4\pi} \nabla \int \mathbf{J}(\mathbf{x}') \cdot \nabla\left(\frac{1}{|\mathbf{x} - \mathbf{x}'|}\right) d^3x' - \frac{\mu_0}{4\pi} \int \mathbf{J}(\mathbf{x}')\nabla^2\left(\frac{1}{|\mathbf{x} - \mathbf{x}'|}\right) d^3x' \tag{5.19}$$

If we use

$$\nabla\left(\frac{1}{|\mathbf{x} - \mathbf{x}'|}\right) = -\nabla'\left(\frac{1}{|\mathbf{x} - \mathbf{x}'|}\right)$$

and

$$\nabla^2\left(\frac{1}{|\mathbf{x} - \mathbf{x}'|}\right) = -4\pi\delta(\mathbf{x} - \mathbf{x}')$$

the integrals in (5.19) can be written:

$$\nabla \times \mathbf{B} = -\frac{\mu_0}{4\pi} \nabla \int \mathbf{J}(\mathbf{x}') \cdot \nabla'\left(\frac{1}{|\mathbf{x} - \mathbf{x}'|}\right) d^3x' + \mu_0\mathbf{J}(\mathbf{x}) \tag{5.20}$$

Integration by parts yields

$$\nabla \times \mathbf{B} = \mu_0\mathbf{J} + \frac{\mu_0}{4\pi} \nabla \int \frac{\nabla' \cdot \mathbf{J}(\mathbf{x}')}{|\mathbf{x} - \mathbf{x}'|} d^3x' \tag{5.21}$$

But for steady-state magnetic phenomena $\nabla \cdot \mathbf{J} = 0$, so that we obtain

$$\nabla \times \mathbf{B} = \mu_0\mathbf{J} \tag{5.22}$$

This is the second equation of magnetostatics, corresponding to $\nabla \cdot \mathbf{E} = \rho/\epsilon_0$ in electrostatics.

In electrostatics Gauss's law (1.11) is the integral form of the equation $\nabla \cdot \mathbf{E} = \rho/\epsilon_0$. The integral equivalent of (5.22) is called *Ampère's law*. It is obtained by applying Stokes's theorem to the integral of the normal component of (5.22) over an open surface S bounded by a closed curve C, as shown in Fig. 5.4. Thus

$$\int_S \nabla \times \mathbf{B} \cdot \mathbf{n}\, da = \mu_0 \int_S \mathbf{J} \cdot \mathbf{n}\, da \tag{5.23}$$

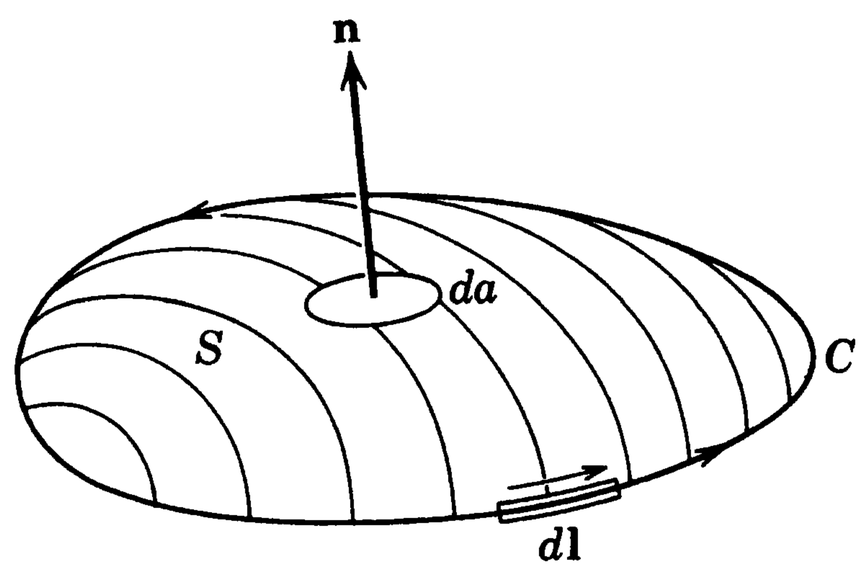

Figure 5.4

is transformed into

$$\oint_C \mathbf{B} \cdot d\mathbf{l} = \mu_0 \int_S \mathbf{J} \cdot \mathbf{n}\, da \tag{5.24}$$

Since the surface integral of the current density is the total current I passing through the closed curve C, Ampère's law can be written in the form:

$$\oint_C \mathbf{B} \cdot d\mathbf{l} = \mu_0 I \tag{5.25}$$

Just as Gauss's law can be used for calculation of the electric field in highly symmetric situations, so Ampère's law can be employed in analogous circumstances.

5.4 Vector Potential

The basic differential laws of magnetostatics are

$$\begin{aligned} \nabla \times \mathbf{B} &= \mu_0 \mathbf{J} \\ \nabla \cdot \mathbf{B} &= 0 \end{aligned} \tag{5.26}$$

The problem is how to solve them. If the current density is zero in the region of interest, $\nabla \times \mathbf{B} = 0$ permits the expression of the vector magnetic induction $\mathbf{B}$ as the gradient of a *magnetic scalar potential*, $\mathbf{B} = -\nabla\Phi_M$. Then (5.26) reduces to the Laplace equation for Φ_M, and all our techniques for handling electrostatic problems can be brought to bear. A large number of problems fall into this class, but we will defer discussion of them until later in the chapter. The reason is that the boundary conditions are different from those encountered in electrostatics, and the problems usually involve macroscopic media with magnetic properties different from free space with charges and currents.

A general method of attack is to exploit the second equation in (5.26). If $\nabla \cdot \mathbf{B} = 0$ everywhere, $\mathbf{B}$ must be the curl of some vector field $\mathbf{A}(\mathbf{x})$, called the *vector potential*,

$$\mathbf{B}(\mathbf{x}) = \nabla \times \mathbf{A}(\mathbf{x}) \tag{5.27}$$

We have, in fact, already written $\mathbf{B}$ in this form (5.16). Evidently, from (5.16), the general form of $\mathbf{A}$ is

$$\mathbf{A}(\mathbf{x}) = \frac{\mu_0}{4\pi} \int \frac{\mathbf{J}(\mathbf{x}')}{|\mathbf{x} - \mathbf{x}'|}\, d^3x' + \nabla\Psi(\mathbf{x}) \tag{5.28}$$

The added gradient of an arbitrary scalar function Ψ shows that for a given magnetic induction $\mathbf{B}$, the vector potential can be freely transformed according to

$$\mathbf{A} \to \mathbf{A} + \nabla\Psi \tag{5.29}$$

This transformation is called a *gauge transformation*. Such transformations on $\mathbf{A}$ are possible because (5.27) specifies only the curl of $\mathbf{A}$. The freedom of gauge transformations allows us to make $\nabla \cdot \mathbf{A}$ have any convenient functional form we wish.

If (5.27) is substituted into the first equation in (5.26), we find

$$\nabla \times (\nabla \times \mathbf{A}) = \mu_0 \mathbf{J}$$

or

$$\nabla(\nabla \cdot \mathbf{A}) - \nabla^2 \mathbf{A} = \mu_0 \mathbf{J} \tag{5.30}$$

If we now exploit the freedom implied by (5.29), we can make the convenient choice of gauge,* $\nabla \cdot \mathbf{A} = 0$. Then each rectangular component of the vector potential satisfies the Poisson equation,

$$\nabla^2 \mathbf{A} = -\mu_0 \mathbf{J} \tag{5.31}$$

From our discussions of electrostatics it is clear that the solution for $\mathbf{A}$ in unbounded space is (5.28) with Ψ = constant:

$$\mathbf{A}(\mathbf{x}) = \frac{\mu_0}{4\pi} \int \frac{\mathbf{J}(\mathbf{x}')}{|\mathbf{x} - \mathbf{x}'|} d^3x' \tag{5.32}$$

The condition Ψ = constant can be understood as follows. Our choice of gauge, $\nabla \cdot \mathbf{A} = 0$, reduces to $\nabla^2\Psi = 0$, since the first term in (5.28) has zero divergence because of $\nabla' \cdot \mathbf{J} = 0$. If $\nabla^2\Psi = 0$ holds in all space, Ψ must be at most a constant provided there are no sources at infinity.

5.5 *Vector Potential and Magnetic Induction for a Circular Current Loop*

As an illustration of the calculation of magnetic fields from given current distributions, we consider the problem of a circular loop of radius a, lying in the x-y plane, centered at the origin, and carrying a current I, as shown in Fig. 5.5. The current density $\mathbf{J}$ has only a component in the ϕ direction,

$$J_\phi = I \sin\theta' \delta(\cos\theta') \frac{\delta(r' - a)}{a} \tag{5.33}$$

The delta functions restrict current flow to a ring of radius a. The vectorial current density $\mathbf{J}$ can be written

$$\mathbf{J} = -J_\phi \sin\phi' \mathbf{i} + J_\phi \cos\phi' \mathbf{j} \tag{5.34}$$

Since the geometry is cylindrically symmetric, we may choose the observation point in the x-z plane ($\phi = 0$) for purposes of calculation. Since the azimuthal

*The choice is called the *Coulomb gauge*, for a reason that will become apparent only in Section 6.3.

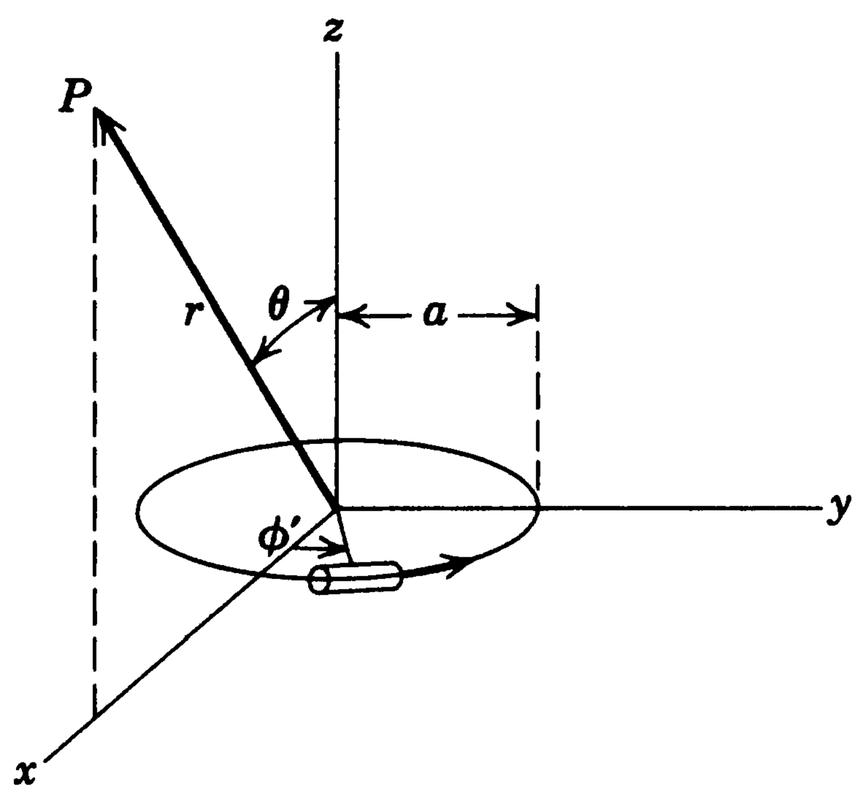

Figure 5.5

integration in (5.32) is symmetric about $\phi' = 0$, the x component of the current does not contribute. This leaves only the y component, which is A_ϕ. Thus

$$A_\phi(r, \theta) = \frac{\mu_0 I}{4\pi a} \int r'^2 \, dr' \, d\Omega' \, \frac{\sin\theta' \cos\phi' \delta(\cos\theta')\delta(r' - a)}{|\mathbf{x} - \mathbf{x}'|} \tag{5.35}$$

where $|\mathbf{x} - \mathbf{x}'| = [r^2 + r'^2 - 2rr'(\cos\theta\cos\theta' + \sin\theta\sin\theta'\cos\phi')]^{1/2}$.

We first consider the straightforward evaluation of (5.35). Integration over the delta functions leaves the result

$$A_\phi(r, \theta) = \frac{\mu_0 I a}{4\pi} \int_0^{2\pi} \frac{\cos\phi' \, d\phi'}{(a^2 + r^2 - 2ar\sin\theta\cos\phi')^{1/2}} \tag{5.36}$$

This integral can be expressed in terms of the complete elliptic integrals K and E:

$$A_\phi(r, \theta) = \frac{\mu_0}{4\pi} \frac{4Ia}{\sqrt{a^2 + r^2 + 2ar\sin\theta}} \left[\frac{(2 - k^2)K(k) - 2E(k)}{k^2} \right] \tag{5.37}$$

where the argument k of the elliptic integrals is defined through

$$k^2 = \frac{4ar\sin\theta}{a^2 + r^2 + 2ar\sin\theta}$$

The components of magnetic induction,

$$\left.\begin{aligned} B_r &= \frac{1}{r\sin\theta} \frac{\partial}{\partial\theta} (\sin\theta A_\phi) \\ B_\theta &= -\frac{1}{r} \frac{\partial}{\partial r} (r A_\phi) \\ B_\phi &= 0 \end{aligned}\right\} \tag{5.38}$$

can also be expressed in terms of elliptic integrals. But the results are not particularly illuminating (useful, however, for computation).

For $a \gg r$, $a \ll r$, or $\theta \ll 1$, an alternative expansion of (5.36) in powers of $a^2r^2 \sin^2\theta/(a^2 + r^2)^2$ leads to the following approximate expression for the vector potential,

$$A_\phi(r, \theta) = \frac{\mu_0 I a^2 r \sin\theta}{4(a^2 + r^2)^{3/2}} \left[1 + \frac{15a^2r^2\sin^2\theta}{8(a^2 + r^2)^2} + \cdots \right] \tag{5.39}$$

To the same accuracy, the corresponding field components are

$$\begin{aligned} B_r &= \frac{\mu_0 I a^2 \cos\theta}{2(a^2+r^2)^{3/2}}\left[1+\frac{15a^2r^2\sin^2\theta}{4(a^2+r^2)^2}+\cdots\right] \\ B_\theta &= -\frac{\mu_0 I a^2 \sin\theta}{4(a^2+r^2)^{5/2}}\left[2a^2-r^2+\frac{15a^2r^2\sin^2\theta(4a^2-3r^2)}{8(a^2+r^2)^2}+\cdots\right] \end{aligned} \tag{5.40}$$

These can easily be specialized to the three regions, near the axis ($\theta \ll 1$), near the center of the loop ($r \ll a$), and far from the loop ($r \gg a$).

Of particular interest are the fields far from the loop:

$$\left.\begin{aligned} B_r &= \frac{\mu_0}{2\pi}(I\pi a^2)\frac{\cos\theta}{r^3} \\ B_\theta &= \frac{\mu_0}{4\pi}(I\pi a^2)\frac{\sin\theta}{r^3} \end{aligned}\right\} \tag{5.41}$$

Comparison with the electrostatic dipole fields (4.12) shows that the magnetic fields far away from a circular current loop are dipole in character. By analogy with electrostatics we define the magnetic dipole moment of the loop to be

$$m = \pi I a^2 \tag{5.42}$$

We see in the next section that this is a special case of a general result—localized current distributions give dipole fields at large distances; the magnetic moment of a plane current loop is the product of the area of the loop times the current.

Although we have obtained a complete solution to the problem in terms of elliptic integrals, we now illustrate the use of a spherical harmonic expansion to point out similarities and differences between the magnetostatic and electrostatic problems. Thus we return to (5.35) and substitute the spherical expansion (3.70) for $|\mathbf{x}-\mathbf{x}'|^{-1}$:

$$A_\phi = \frac{\mu_0 I}{a}\,\mathrm{Re}\sum_{l,m}\frac{Y_{lm}(\theta,0)}{2l+1}\int r'^2\,dr'\,d\Omega'\,\delta(\cos\theta')\delta(r'-a)e^{i\phi'}\frac{r_<^l}{r_>^{l+1}}Y_{lm}^*(\theta',\phi') \tag{5.43}$$

The presence of $e^{i\phi'}$ means that only $m = +1$ will contribute to the sum. Hence

$$A_\phi = 2\pi\mu_0 I a\sum_{l=1}^{\infty}\frac{Y_{l,1}(\theta,0)}{2l+1}\frac{r_<^l}{r_>^{l+1}}\left[Y_{l,1}\left(\frac{\pi}{2},0\right)\right] \tag{5.44}$$

where now $r_<$ ($r_>$) is the smaller (larger) of a and r. The square-bracketed quantity is a number depending on l:

$$\begin{aligned} \left[\cdots\right] &= \sqrt{\frac{2l+1}{4\pi l(l+1)}}\,P_l^1(0) \\ &= \begin{cases} 0 & \text{for } l \text{ even} \\ \sqrt{\dfrac{2l+1}{4\pi l(l+1)}}\left[\dfrac{(-1)^{n+1}\Gamma(n+\frac{3}{2})}{\Gamma(n+1)\Gamma(\frac{3}{2})}\right] & \text{for } l = 2n+1 \end{cases} \end{aligned} \tag{5.45}$$

Then A_ϕ can be written

$$A_\phi = -\frac{\mu_0 I a}{4} \sum_{n=0}^{\infty} \frac{(-1)^n (2n-1)!!}{2^n (n+1)!} \frac{r_<^{2n+1}}{r_>^{2n+2}} P_{2n+1}^1(\cos\theta) \tag{5.46}$$

where $(2n-1)!! = (2n-1)(2n-3)(\cdots) \times 5 \times 3 \times 1$, and the $n = 0$ coefficient in the sum is unity by definition. To evaluate the radial component of **B** from (5.38) we need

$$\frac{d}{dx}\left[\sqrt{1-x^2}\, P_l^1(x)\right] = l(l+1)P_l(x) \tag{5.47}$$

Then we find

$$B_r = \frac{\mu_0 I a}{2r} \sum_{n=0}^{\infty} \frac{(-1)^n (2n+1)!!}{2^n n!} \frac{r_<^{2n+1}}{r_>^{2n+2}} P_{2n+1}(\cos\theta) \tag{5.48}$$

The θ component of **B** is similarly

$$B_\theta = -\frac{\mu_0 I a^2}{4} \sum_{n=0}^{\infty} \frac{(-1)^n (2n+1)!!}{2^n (n+1)!} \begin{Bmatrix} -\left(\dfrac{2n+2}{2n+1}\right) \dfrac{1}{a^3} \left(\dfrac{r}{a}\right)^{2n} \\ \dfrac{1}{r^3}\left(\dfrac{a}{r}\right)^{2n} \end{Bmatrix} P_{2n+1}^1(\cos\theta) \tag{5.49}$$

The upper line holds for $r < a$, and the lower line for $r > a$. For $r \gg a$, only the $n = 0$ term in the series is important. Then, since $P_1^1(\cos\theta) = -\sin\theta$, (5.48) and (5.49) reduce to (5.41). For $r \ll a$, the leading term is again $n = 0$. The fields are then equivalent to a magnetic induction $\mu_0 I/2a$ in the z direction, a result that can be found by elementary means.

We note a characteristic difference between this problem and a corresponding cylindrically symmetric electrostatic problem. Associated Legendre polynomials appear, as well as ordinary Legendre polynomials. This can be traced to the vector character of the current and vector potential, as opposed to the scalar properties of charge and electrostatic potential.

Another mode of attack on the problem of the planar loop is to employ an expansion in cylindrical waves. Instead of (3.70) as a representation of $|\mathbf{x} - \mathbf{x}'|^{-1}$ we may use the cylindrical form (3.148) or (3.149) or that of Problem 3.16b. The application of this technique to the circular loop will be left to the problems.

5.6 Magnetic Fields of a Localized Current Distribution, Magnetic Moment

We now consider the properties of a general current distribution that is localized in a small region of space, "small" being relative to the scale of length of interest to the observer. A complete treatment of this problem, in analogy with the electrostatic multipole expansion, can be made using *vector* spherical harmonics.*

*This is not the only way. Scalar potentials can be used. See J. B. Bronzan, *Am. J. Phys.* **39**, 1357 (1971).

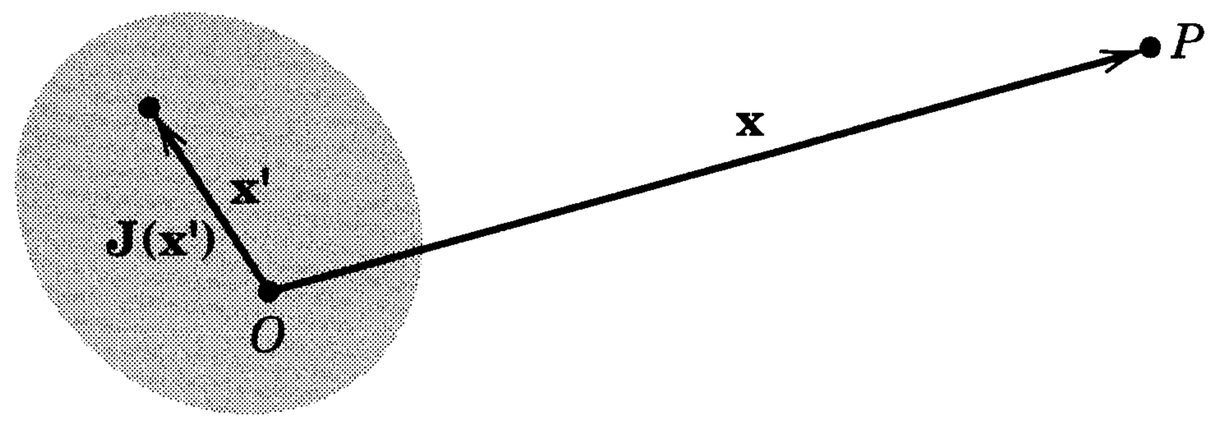

Figure 5.6 Localized current density $\mathbf{J}(\mathbf{x}')$ gives rise to a magnetic induction at the point P with coordinate $\mathbf{x}$.

These are presented in Chapter 9 in connection with multipole radiation. We will be content here with only the lowest order of approximation. Assuming $|\mathbf{x}| \gg |\mathbf{x}'|$, we expand the denominator of (5.32) in powers of $\mathbf{x}'$ measured relative to a suitable origin in the localized current distribution, shown schematically in Fig. 5.6:

$$\frac{1}{|\mathbf{x} - \mathbf{x}'|} = \frac{1}{|\mathbf{x}|} + \frac{\mathbf{x} \cdot \mathbf{x}'}{|\mathbf{x}|^3} + \cdots \tag{5.50}$$

Then a given component of the vector potential will have the expansion,

$$A_i(\mathbf{x}) = \frac{\mu_0}{4\pi}\left[\frac{1}{|\mathbf{x}|}\int J_i(\mathbf{x}')\, d^3x' + \frac{\mathbf{x}}{|\mathbf{x}|^3}\cdot\int J_i(\mathbf{x}')\mathbf{x}'\, d^3x' + \cdots\right] \tag{5.51}$$

The fact that $\mathbf{J}$ is a localized, divergenceless current distribution permits simplification and transformation of the expansion (5.51). Let $f(\mathbf{x}')$ and $g(\mathbf{x}')$ be well-behaved functions of $\mathbf{x}'$ to be chosen below. If $\mathbf{J}(\mathbf{x}')$ is localized but not necessarily divergenceless, we have the identity

$$\int (f\mathbf{J}\cdot\nabla' g + g\mathbf{J}\cdot\nabla' f + fg\nabla'\cdot\mathbf{J})\, d^3x' = 0 \tag{5.52}$$

This can be established by an integration by parts on the second term, followed by expansion of $f\nabla'\cdot(g\mathbf{J})$. With $f = 1$ and $g = x'_i$, (5.52) with $\nabla'\cdot\mathbf{J} = 0$ establishes that

$$\int J_i(\mathbf{x}')\, d^3x' = 0$$

The first term in (5.51), corresponding to the monopole term in the electrostatic expansion, is therefore absent. With $f = x'_i$, $g = x'_j$ and $\nabla'\cdot\mathbf{J} = 0$, (5.52) yields

$$\int (x'_i J_j + x'_j J_i)\, d^3x' = 0$$

The integral in the second term of (5.51) can therefore be written

$$\begin{aligned}
\mathbf{x}\cdot\int \mathbf{x}' J_i\, d^3x' &\equiv \sum_j x_j \int x'_j J_i\, d^3x' \\
&= -\frac{1}{2}\sum_j x_j \int (x'_i J_j - x'_j J_i)\, d^3x' \\
&= -\frac{1}{2}\sum_{j,k} \epsilon_{ijk} x_j \int (\mathbf{x}'\times\mathbf{J})_k\, d^3x' \\
&= -\frac{1}{2}\left[\mathbf{x}\times\int(\mathbf{x}'\times\mathbf{J})\, d^3x'\right]_i
\end{aligned}$$

It is customary to define *the magnetic moment density or magnetization* as

$$\mathcal{M}(\mathbf{x}) = \frac{1}{2}[\mathbf{x} \times \mathbf{J}(\mathbf{x})] \tag{5.53}$$

and its integral as the *magnetic moment* **m**:

$$\mathbf{m} = \frac{1}{2}\int \mathbf{x}' \times \mathbf{J}(\mathbf{x}')\, d^3x' \tag{5.54}$$

Then the vector potential from the second term in (5.51) is the magnetic dipole vector potential,

$$\mathbf{A}(\mathbf{x}) = \frac{\mu_0}{4\pi}\frac{\mathbf{m} \times \mathbf{x}}{|\mathbf{x}|^3} \tag{5.55}$$

This is the lowest nonvanishing term in the expansion of **A** for a localized steady-state current distribution. The magnetic induction **B** outside the localized source can be calculated directly by evaluating the curl of (5.55):

$$\mathbf{B}(\mathbf{x}) = \frac{\mu_0}{4\pi}\left[\frac{3\mathbf{n}(\mathbf{n}\cdot\mathbf{m}) - \mathbf{m}}{|\mathbf{x}|^3}\right] \tag{5.56}$$

Here **n** is a unit vector in the direction **x**. The magnetic induction (5.56) has exactly the form (4.13) of the field of a dipole. This is the generalization of the result found for the circular loop in the last section. Far away from *any* localized current distribution the magnetic induction is that of a magnetic dipole of dipole moment given by (5.54).

If the current is confined to a plane, but otherwise arbitrary, loop, the magnetic moment can be expressed in a simple form. If the current I flows in a closed circuit whose line element is $d\mathbf{l}$, (5.54) becomes

$$\mathbf{m} = \frac{I}{2}\oint \mathbf{x} \times d\mathbf{l}$$

For a plane loop such as that in Fig. 5.7, the magnetic moment is perpendicular to the plane of the loop. Since $\frac{1}{2}|\mathbf{x} \times d\mathbf{l}| = da$, where da is the triangular element of the area defined by the two ends of $d\mathbf{l}$ and the origin, the loop integral gives the total area of the loop. Hence the magnetic moment has magnitude,

$$|\mathbf{m}| = I \times (\text{Area}) \tag{5.57}$$

regardless of the shape of the circuit.

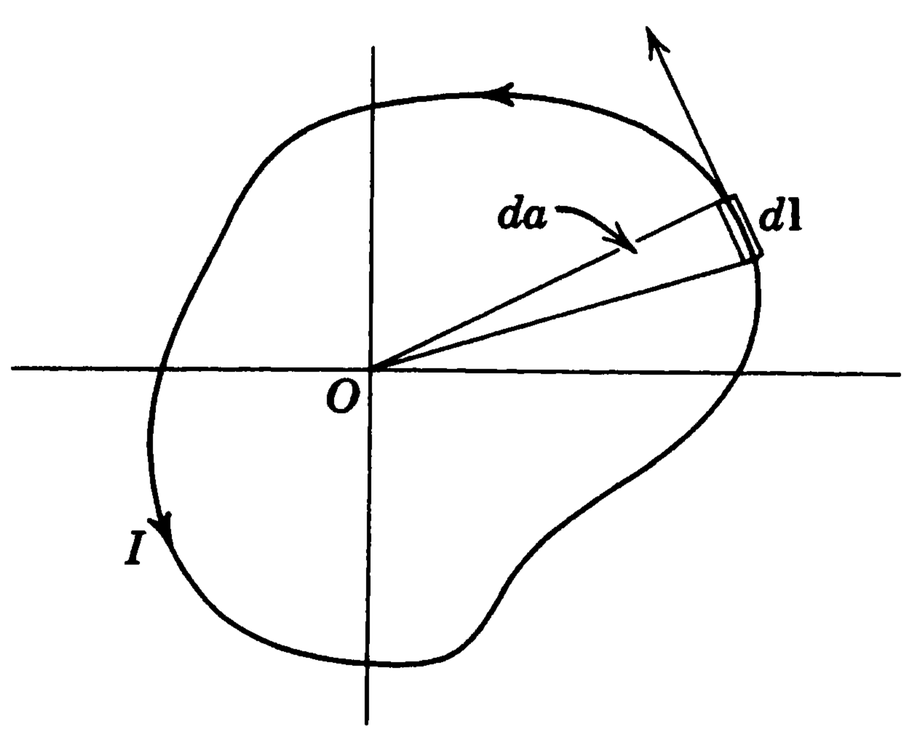

Figure 5.7

If the current distribution is provided by a number of charged particles with charges q_i and masses M_i in motion with velocities $\mathbf{v}_i$, the magnetic moment can be expressed in terms of the orbital angular momentum of the particles. The current density is

$$\mathbf{J} = \sum_i q_i \mathbf{v}_i \delta(\mathbf{x} - \mathbf{x}_i)$$

where $\mathbf{x}_i$ is the position of the ith particle. Then the magnetic moment (5.54) becomes

$$\mathbf{m} = \frac{1}{2} \sum_i q_i (\mathbf{x}_i \times \mathbf{v}_i)$$

The vector product $(\mathbf{x}_i \times \mathbf{v}_i)$ is proportional to the ith particle's orbital angular momentum, $\mathbf{L}_i = M_i(\mathbf{x}_i \times \mathbf{v}_i)$. Thus the moment becomes

$$\mathbf{m} = \sum_i \frac{q_i}{2M_i} \mathbf{L}_i \tag{5.58}$$

If all the particles in motion have the same charge-to-mass ratio ($q_i/M_i = e/M$), the magnetic moment can be written in terms of the *total* orbital angular momentum $\mathbf{L}$:

$$\mathbf{m} = \frac{e}{2M} \sum_i \mathbf{L}_i = \frac{e}{2M} \mathbf{L} \tag{5.59}$$

This is the well-known classical connection between angular momentum and magnetic moment, which holds for orbital motion even on the atomic scale. But this classical connection fails for the intrinsic moment of electrons and other elementary particles. For electrons, the intrinsic moment is slightly more than twice as large as implied by (5.59), with the spin angular momentum $\mathbf{S}$ replacing $\mathbf{L}$. Thus we speak of the electron having a g factor of 2(1.00116). The departure of the magnetic moment from its classical value has its origins in relativistic and quantum-mechanical effects which we cannot consider here.

Before leaving the topic of the fields of a localized current distribution, we consider the spherical volume integral of the magnetic induction $\mathbf{B}$. Just as in the electrostatic case discussed at the end of Section 4.1, there are two limits of interest, one in which the sphere of radius R contains all of the current and the other where the current is completely external to the spherical volume. The volume integral of $\mathbf{B}$ is

$$\int_{r<R} \mathbf{B}(\mathbf{x})\, d^3x = \int_{r<R} \nabla \times \mathbf{A}\, d^3x \tag{5.60}$$

The volume integral of the curl of $\mathbf{A}$ can be integrated to give a surface integral. Thus

$$\int_{r<R} \mathbf{B}\, d^3x = R^2 \int d\Omega\, \mathbf{n} \times \mathbf{A}$$

where $\mathbf{n}$ is the outwardly directed normal. Substitution of (5.32) for $\mathbf{A}$ and an interchange of the orders of integration permits this to be written as

$$\int_{r<R} \mathbf{B}\, d^3x = -\frac{\mu_0}{4\pi} R^2 \int d^3x'\, \mathbf{J}(\mathbf{x}') \times \int d\Omega\, \frac{\mathbf{n}}{|\mathbf{x} - \mathbf{x}'|}$$

The angular integral is the same one as occurred in the electrostatic situation. Making use of (4.16′), we therefore find for the integral of **B** over a spherical volume,

$$\int_{r<R} \mathbf{B}\, d^3x = \frac{\mu_0}{3} \int \left(\frac{R^2 r_<}{r' r_>^2}\right) \mathbf{x}' \times \mathbf{J}(\mathbf{x}')\, d^3x' \tag{5.61}$$

where $(r_<, r_>)$ are the smaller and larger of r' and R. If all the current density is contained within the sphere, $r_< = r'$ and $r_> = R$. Then

$$\int_{r<R} \mathbf{B}\, d^3x = \frac{2\mu_0}{3} \mathbf{m} \tag{5.62}$$

where **m** is the total magnetic moment (5.54). For the opposite extreme of the current all external to the sphere, we have, by virtue of (5.14),

$$\int_{r<R} \mathbf{B}\, d^3x = \frac{4\pi R^3}{3} \mathbf{B}(0) \tag{5.63}$$

The results (5.62) and (5.63) can be compared with their electrostatic counterparts (4.18) and (4.19). The difference between (5.62) and (4.18) is attributable to the difference in the origins of the fields, one from charges and the other from circulating currents. If we wish to include the information of (5.62) in the magnetic dipole field (5.56), we must add a delta function contribution

$$\mathbf{B}(\mathbf{x}) = \frac{\mu_0}{4\pi} \left[\frac{3\mathbf{n}(\mathbf{n}\cdot\mathbf{m}) - \mathbf{m}}{|\mathbf{x}|^3} + \frac{8\pi}{3} \mathbf{m}\delta(\mathbf{x}) \right] \tag{5.64}$$

The delta function term enters the expression for the hyperfine structure of atomic s states (see the next section).

5.7 *Force and Torque on and Energy of a Localized Current Distribution in an External Magnetic Induction*

If a localized distribution of current is placed in an external magnetic induction $\mathbf{B}(\mathbf{x})$, it experiences forces and torques according to Ampère's laws. The general expressions for the total force and torque are given by (5.12) and (5.13). If the external magnetic induction varies slowly over the region of current, a Taylor series expansion can be utilized to find the dominant terms in the force and torque. A component of **B** can be expanded around a suitable origin,

$$B_k(\mathbf{x}) = B_k(0) + \mathbf{x}\cdot\nabla B_k(0) + \cdots \tag{5.65}$$

Then the ith component of the force (5.12) becomes

$$F_i = \sum_{jk} \epsilon_{ijk} \left[B_k(0) \int J_j(\mathbf{x}')\, d^3x' + \int J_j(\mathbf{x}')\mathbf{x}'\cdot\nabla B_k(0)\, d^3x' + \cdots \right] \tag{5.66}$$

Here ϵ_{ijk} is the completely antisymmetric unit tensor ($\epsilon_{ijk} = 1$ for $i = 1, j = 2, k = 3$, and any cyclic permutation, $\epsilon_{ijk} = -1$ for other permutations, and $\epsilon_{ijk} = 0$ for two or more indices equal). The volume integral of **J** vanishes for steady

currents; the lowest order contribution to the force comes from the second term in (5.66). The result above (5.53) can be used [with $\mathbf{x} \to \nabla B_k(0)$] to yield

$$F_i = \sum_{jk} \epsilon_{ijk}(\mathbf{m} \times \nabla)_j B_k(\mathbf{x}) \tag{5.67}$$

After differentiation of $B_k(\mathbf{x})$, $\mathbf{x}$ is to be put to zero. This can be written vectorially as

$$\mathbf{F} = (\mathbf{m} \times \nabla) \times \mathbf{B} = \nabla(\mathbf{m} \cdot \mathbf{B}) - \mathbf{m}(\nabla \cdot \mathbf{B}) \tag{5.68}$$

Since $\nabla \cdot \mathbf{B} = 0$ generally, the lowest order force on a localized current distribution in an external magnetic field $\mathbf{B}$ is

$$\mathbf{F} = \nabla(\mathbf{m} \cdot \mathbf{B}) \tag{5.69}$$

This force represents the rate of change of the total mechanical momentum, including the "hidden mechanical momentum" associated with the presence of electromagnetic momentum. (See Problems 6.5 and 12.8, and the references cited at the end of Chapter 12.) The effective force in Newton's equation of motion of mass times acceleration is (5.69), augmented by $(1/c^2)(d/dt)(\mathbf{E} \times \mathbf{m})$, where $\mathbf{E}$ is the external electric field at the position of the dipole. Apart from angular factors, the relative size of the two contributions is (cB/L) versus $(E/\lambda\!\!\!^{-})$, where L is the length scale over which $\mathbf{B}$ changes significantly and $\lambda\!\!\!^{-}$ is the free-space wavelength of radiation at the typical frequencies present in a Fourier decomposition of the time-varying electric field.

A localized current distribution in a nonuniform magnetic induction experiences a force proportional to its magnetic moment $\mathbf{m}$ and given by (5.69). One simple application of this result is the time-averaged force on a charged particle spiraling in a nonuniform magnetic field. As is well known, a charged particle in a *uniform* magnetic induction moves in a circle at right angles to the field and with constant velocity parallel to the field, tracing out a helical path. The circular motion is, on the time average, equivalent to a circular loop of current that will have a magnetic moment given by (5.57). If the field is not uniform but has a small gradient (so that in one turn around the helix the particle does not feel significantly different field strengths), then the motion of the particle can be discussed in terms of the force on the equivalent magnetic moment. Consideration of the signs of the moment and the force shows that charged particles tend to be repelled by regions of high flux density, independent of the sign of their charge. This is the basis of the "magnetic mirrors," important in the confinement of plasmas.

The total torque on the localized current distribution is found in a similar way by inserting expansion (5.65) into (5.13). Here the zeroth-order term in the expansion contributes. Keeping only this leading term, we have

$$\mathbf{N} = \int \mathbf{x}' \times [\mathbf{J} \times \mathbf{B}(0)]\, d^3x' \tag{5.70}$$

Writing out the triple vector product, we get

$$\mathbf{N} = \int [(\mathbf{x}' \cdot \mathbf{B})\mathbf{J} - (\mathbf{x}' \cdot \mathbf{J})\mathbf{B}]\, d^3x'$$

The first integral has the same form as the one considered in (5.66). Hence we can write down its value immediately. The second integral vanishes for a localized steady-state current distribution, as can be seen from (5.52) with $f = g = r'$. The leading term in the torque is therefore

$$\mathbf{N} = \mathbf{m} \times \mathbf{B}(0) \tag{5.71}$$

This is the familiar expression for the torque on a dipole, discussed in Section 5.1 as one of the ways of defining the magnitude and direction of the magnetic induction.

The potential energy of a permanent magnetic moment (or dipole) in an external magnetic field can be obtained from either the force (5.69) or the torque (5.71). If we interpret the force as the negative gradient of a potential energy U, we find

$$U = -\mathbf{m} \cdot \mathbf{B} \tag{5.72}$$

For a magnetic moment in a uniform field, the torque (5.71) can be interpreted as the negative derivative of U with respect to the angle between $\mathbf{B}$ and $\mathbf{m}$. This well-known result for the potential energy of a dipole shows that the dipole tends to orient itself parallel to the field in the position of lowest potential energy.

We remark in passing that (5.72) is *not* the total energy of the magnetic moment in the external field. In bringing the dipole $\mathbf{m}$ into its final position in the field, work must be done to keep the current $\mathbf{J}$, which produces $\mathbf{m}$, constant. Even though the final situation is a steady state, there is a transient period initially in which the relevant fields are time-dependent. This lies outside our present considerations. Consequently we leave the discussion of the energy of magnetic fields to Section 5.16, following Faraday's law of induction.

The energy expression (5.72) can be employed in the treatment of magnetic effects on atomic energy levels, as in the Zeeman effect or for the fine and hyperfine structure. The fine structure can be viewed as coming from differences in energy of an electron's intrinsic magnetic moment $\boldsymbol{\mu}_e$ in the magnetic field seen in its rest frame. Fine structure, with the subtle complication of Thomas precession, is discussed briefly in Chapter 11. The hyperfine interaction is that of the magnetic moment $\boldsymbol{\mu}_N$ of the nucleus with the magnetic field produced by the electron. The interaction Hamiltonian is (5.72) with $\mathbf{m} = \boldsymbol{\mu}_N$ and $\mathbf{B}$ equal to the magnetic field of the electron, evaluated at the position of the nucleus ($\mathbf{x} = 0$). This field has two parts; one is the dipole field (5.64) and the other is the magnetic field produced by the orbital motion of the electron's charge. The latter is given nonrelativistically by (5.5) and can be expressed as $\mathbf{B}_{\text{orbital}}(0) = \mu_0 e\mathbf{L}/4\pi m r^3$, where $\mathbf{L} = \mathbf{x} \times m\mathbf{v}$ is the orbital angular momentum of the electron about the nucleus. The hyperfine Hamiltonian is therefore

$$\begin{aligned}\mathcal{H}_{\text{HFS}} = \frac{\mu_0}{4\pi}\Bigg\{&-\frac{8\pi}{3}\,\boldsymbol{\mu}_e \cdot \boldsymbol{\mu}_N \delta(\mathbf{x}) \\ &+ \frac{1}{r^3}\left[\boldsymbol{\mu}_e \cdot \boldsymbol{\mu}_N - 3\,\frac{(\mathbf{x}\cdot\boldsymbol{\mu}_e)(\mathbf{x}\cdot\boldsymbol{\mu}_N)}{r^2} - \frac{e}{m}\,\mathbf{L}\cdot\boldsymbol{\mu}_N\right]\Bigg\}\end{aligned} \tag{5.73}$$

The expectation values of this Hamiltonian in the various atomic (and nuclear spin) states yield the hyperfine energy shifts. For spherically symmetric s states

the second term in (5.73) gives a zero expectation value. The hyperfine energy comes solely from the first term:

$$\Delta E = -\frac{\mu_0}{4\pi}\frac{8\pi}{3}|\psi_e(0)|^2 \langle \boldsymbol{\mu}_e \cdot \boldsymbol{\mu}_N \rangle \tag{5.74}$$

For $l \neq 0$, the hyperfine energy comes entirely from the second term in (5.73) because the wave functions for $l \neq 0$ vanish at the origin. These expressions are due to Fermi, who obtained them from the Dirac equation (1930). In applying (5.73) and (5.74) it should be remembered that the charge e is negative and that $\boldsymbol{\mu}_e$ points in the opposite direction to the electron's spin. The energy difference (5.74) between the singlet and triplet states of the 1s state of atomic hydrogen is the source of the famous 21 cm line in astrophysics.

The difference of the "contact" term in (5.73) from the *electric* dipole form (4.20) allows us to draw a conclusion concerning the nature of *intrinsic* magnetic moments. While orbital magnetic moments are obviously caused by circulating currents, it is a priori possible that the *intrinsic* magnetic moments of elementary particles such as the electron, positron, muon, proton, and neutron are caused by magnetic *charges*, arranged in magnetically neutral configurations (no net magnetic charge). If the electron and proton magnetic moments were caused by groups of magnetic charges, the coefficient $8\pi/3$ in (5.74) would be replaced by $-4\pi/3$! The astrophysical hyperfine line of atomic hydrogen would be at 42 cm wavelength, and the singlet and triplet states would be reversed. The experimental results on positronium and muonium, as well as the magnetic scattering of neutrons, give strong additional support to the conclusion that *intrinsic* magnetic moments of particles can be attributed to electric currents, not magnetic charges.*

5.8 *Macroscopic Equations, Boundary Conditions on* B *and* H

So far we have dealt with the basic laws (5.26) of steady-state magnetic fields as microscopic equations in the sense of the Introduction and Chapter 4. We have assumed that the current density **J** was a completely known function of position. In macroscopic problems this is often not true. The atoms in matter have electrons that give rise to effective atomic currents, the current density of which is a rapidly fluctuating quantity. Only its average over a macroscopic volume is known or pertinent. Furthermore, the atomic electrons contribute intrinsic magnetic moments in addition to those from their orbital motion. All these moments can give rise to dipole fields that vary appreciably on the atomic scale of dimensions.

The process of averaging the microscopic equations to obtain a macroscopic description of magnetic fields in ponderable media is discussed in detail in Chapter 6. Here, just as in Chapter 4, we give only a sketch of the elementary

*There is a caveat that all particles must have the same origin for their moments. For a pedagogical discussion of the experiments, see J. D. Jackson, The nature of intrinsic magnetic dipole moments, CERN Report No. 77-17, CERN, Geneva (1977), reprinted in *The International Community of Physicists: Essays on Physics and Society in Honor of Victor Frederick Weisskopf*, ed. V. Stefan, AIP Press/Springer-Verlag, New York (1997).

derivation. The first step is to observe that the averaging of the equation, $\nabla \cdot \mathbf{B}_{\text{micro}} = 0$, leads to the same equation

$$\nabla \cdot \mathbf{B} = 0 \tag{5.75}$$

for the macroscopic magnetic induction. Thus we can still use the concept of a vector potential $\mathbf{A}(\mathbf{x})$ whose curl gives $\mathbf{B}$. The large number of molecules or atoms per unit volume, each with its molecular magnetic moment $\mathbf{m}_i$, gives rise to an average macroscopic *magnetization* or magnetic moment density,

$$\mathbf{M}(\mathbf{x}) = \sum_i N_i \langle \mathbf{m}_i \rangle \tag{5.76}$$

where N_i is the average number per unit volume of molecules of type i and $\langle \mathbf{m}_i \rangle$ is the average molecular moment in a small volume at the point $\mathbf{x}$. In addition to the bulk magnetization, we suppose that there is a macroscopic current density $\mathbf{J}(\mathbf{x})$ from the flow of free charge in the medium. Then the vector potential from a small volume ΔV at the point $\mathbf{x}'$ will be

$$\Delta \mathbf{A}(\mathbf{x}) = \frac{\mu_0}{4\pi} \left[\frac{\mathbf{J}(\mathbf{x}')\, \Delta V}{|\mathbf{x} - \mathbf{x}'|} + \frac{\mathbf{M}(\mathbf{x}') \times (\mathbf{x} - \mathbf{x}')}{|\mathbf{x} - \mathbf{x}'|^3} \Delta V \right]$$

This is the magnetic analog of (4.30). The second term is the dipole vector potential (5.55). Letting ΔV become the macroscopically infinitesimal d^3x', the total vector potential at $\mathbf{x}$ can be written as the integral over all space,

$$\mathbf{A}(\mathbf{x}) = \frac{\mu_0}{4\pi} \int \left[\frac{\mathbf{J}(\mathbf{x}')}{|\mathbf{x} - \mathbf{x}'|} + \frac{\mathbf{M}(\mathbf{x}') \times (\mathbf{x} - \mathbf{x}')}{|\mathbf{x} - \mathbf{x}'|^3} \right] d^3x' \tag{5.77}$$

The magnetization term can be rewritten as follows:

$$\int \frac{\mathbf{M}(\mathbf{x}') \times (\mathbf{x} - \mathbf{x}')}{|\mathbf{x} - \mathbf{x}'|^3}\, d^3x' = \int \mathbf{M}(\mathbf{x}') \times \nabla' \left(\frac{1}{|\mathbf{x} - \mathbf{x}'|} \right) d^3x'$$

Now an integration by parts casts the gradient operator over onto the magnetization and also gives a surface integral. If $\mathbf{M}(\mathbf{x}')$ is well behaved and localized, the surface integral vanishes. The vector potential (5.77) then becomes

$$\mathbf{A}(\mathbf{x}) = \frac{\mu_0}{4\pi} \int \frac{[\mathbf{J}(\mathbf{x}') + \nabla' \times \mathbf{M}(\mathbf{x}')]}{|\mathbf{x} - \mathbf{x}'|}\, d^3x' \tag{5.78}$$

The magnetization is seen to contribute an *effective current density*,

$$\mathbf{J}_M = \nabla \times \mathbf{M} \tag{5.79}$$

The macroscopic equivalent of the microscopic equation, $\nabla \times \mathbf{B}_{\text{micro}} = \mu_0 \mathbf{J}_{\text{micro}}$, can be read off from (5.78). If the equations (5.26) have (5.32) as a solution, then (5.78) implies that $\mathbf{J} + \mathbf{J}_M$ plays the role of the current in the macroscopic equivalent, that is:

$$\nabla \times \mathbf{B} = \mu_0 [\mathbf{J} + \nabla \times \mathbf{M}] \tag{5.80}$$

The $\nabla \times \mathbf{M}$ term can be combined with $\mathbf{B}$ to define a new macroscopic field $\mathbf{H}$, called the *magnetic field*,

$$\mathbf{H} = \frac{1}{\mu_0} \mathbf{B} - \mathbf{M} \tag{5.81}$$

Then the macroscopic equations, replacing (5.26), are

$$\begin{aligned} \nabla \times \mathbf{H} &= \mathbf{J} \\ \nabla \cdot \mathbf{B} &= 0 \end{aligned} \tag{5.82}$$

The introduction of **H** as a macroscopic field is completely analogous to the introduction of **D** for the electrostatic field. The macroscopic equations (5.82) have their electrostatic counterparts,

$$\begin{aligned} \nabla \cdot \mathbf{D} &= \rho \\ \nabla \times \mathbf{E} &= 0 \end{aligned} \tag{5.83}$$

We emphasize that the fundamental fields are **E** and **B**. They satisfy the homogeneous equations in (5.82) and (5.83). The derived fields, **D** and **H**, are introduced as a matter of convenience, to permit us to take into account in an average way the contributions to ρ and **J** of the atomic charges and currents.

To complete the description of macroscopic magnetostatics, there must be a constitutive relation between **H** and **B**. As discussed in the Introduction, for isotropic diamagnetic and paramagnetic substances the simple linear relation

$$\mathbf{B} = \mu \mathbf{H} \tag{5.84}$$

holds, μ being a parameter characteristic of the medium and called the *magnetic permeability*. Typically μ/μ_0 differs from unity by only a few parts in 10^5 ($\mu > \mu_0$ for paramagnetic substances and $\mu < \mu_0$ for diamagnetic). For the ferromagnetic substances, (5.84) must be replaced by a nonlinear functional relationship,

$$\mathbf{B} = \mathbf{F}(\mathbf{H}) \tag{5.85}$$

The phenomenon of hysteresis, shown schematically in Fig. 5.8, implies that **B** is not a single-valued function of **H**. In fact, the function **F**(**H**) depends on the history of preparation of the material. The incremental permeability $\mu(\mathbf{H})$ is defined as the derivative of **B** with respect to **H**, assuming that **B** and **H** are parallel. For high-permeability substances, $\mu(\mathbf{H})/\mu_0$ can be as high as 10^6. Most untreated ferromagnetic materials have a linear relation (5.84) between **B** and **H** for very small fields. Typical values of initial relative permeability range from 10 to 10^4.

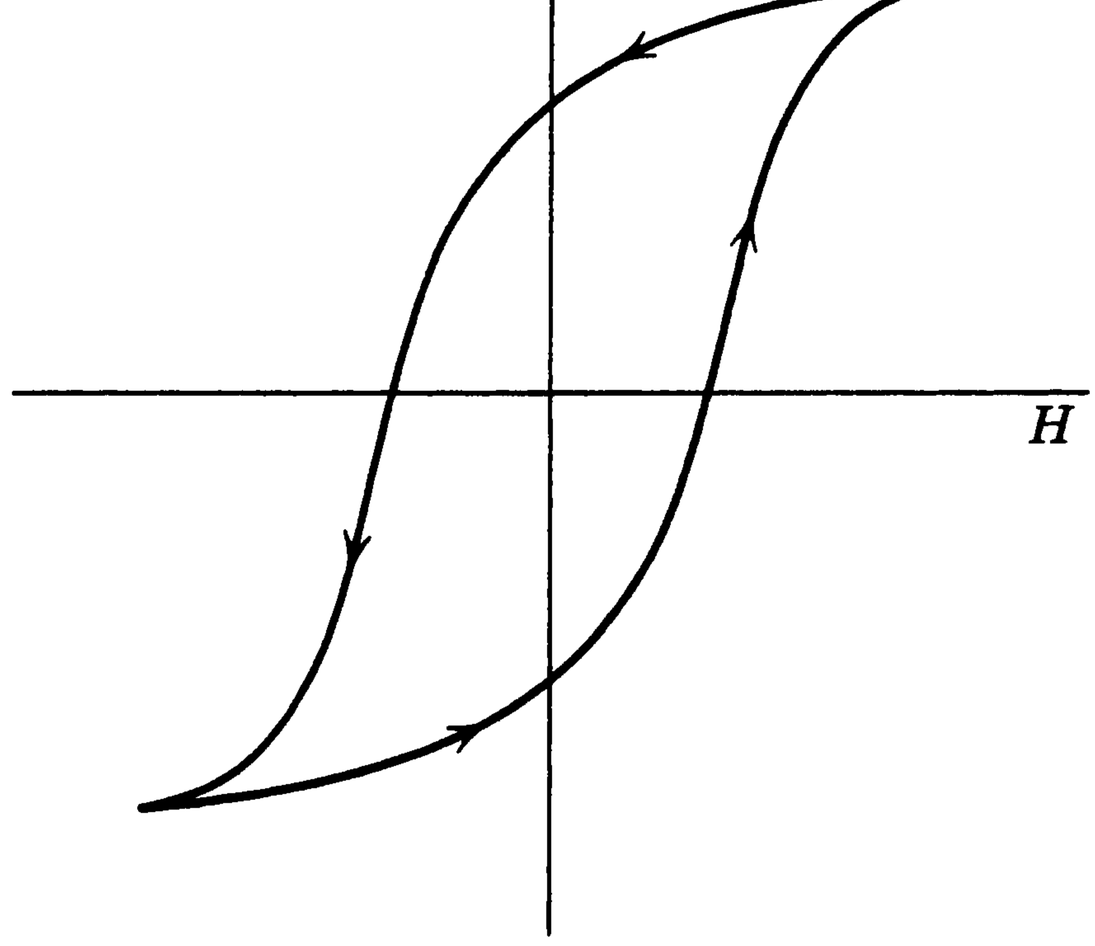

Figure 5.8 Hysteresis loop giving **B** in a ferromagnetic material as a function of **H**.

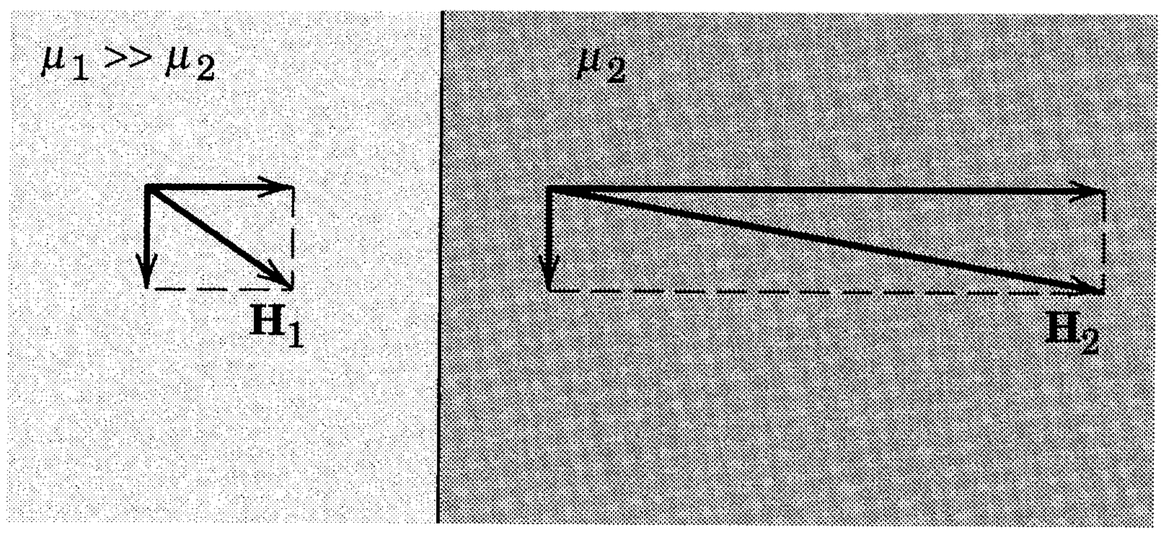

Figure 5.9

The complicated relationship between **B** and **H** in ferromagnetic materials makes analysis of magnetic boundary-value problems inherently more difficult than that of similar electrostatic problems. But the very large values of relative permeability sometimes allow simplifying assumptions on the boundary conditions.

The boundary conditions for **B** and **H** at an interface between two media are derived in Section I.5. There it is shown that the normal components of **B** and the tangential components of **H** on either side of the boundary are related according to

$$(\mathbf{B}_2 - \mathbf{B}_1) \cdot \mathbf{n} = 0 \tag{5.86}$$

$$\mathbf{n} \times (\mathbf{H}_2 - \mathbf{H}_1) = \mathbf{K} \tag{5.87}$$

where **n** is a unit normal pointing from region 1 into region 2 and **K** is the idealized surface current density. For media satisfying linear relations of the form (5.84) the boundary conditions can be expressed alternatively as

$$\mathbf{B}_2 \cdot \mathbf{n} = \mathbf{B}_1 \cdot \mathbf{n}, \qquad \mathbf{B}_2 \times \mathbf{n} = \frac{\mu_2}{\mu_1} \mathbf{B}_1 \times \mathbf{n} \tag{5.88}$$

or

$$\mathbf{H}_2 \cdot \mathbf{n} = \frac{\mu_1}{\mu_2} \mathbf{H}_1 \cdot \mathbf{n}, \qquad \mathbf{H}_2 \times \mathbf{n} = \mathbf{H}_1 \times \mathbf{n} \tag{5.89}$$

If $\mu_1 \gg \mu_2$, the normal component of $\mathbf{H}_2$ is much larger than the normal component of $\mathbf{H}_1$, as shown in Fig. 5.9. In the limit $(\mu_1/\mu_2) \to \infty$, the magnetic field $\mathbf{H}_2$ is normal to the boundary surface, independent of the direction of $\mathbf{H}_1$ (barring the exceptional case of $\mathbf{H}_1$ exactly parallel to the interface). The boundary condition on **H** at the surface of a material of very high permeability is thus the same as for the electric field at the surface of a conductor. We may therefore use electrostatic potential theory for the magnetic field. The surfaces of the high-permeability material are approximately "equipotentials," and the lines of **H** are normal to these equipotentials. This analogy is exploited in many magnet-design problems. The type of field is decided upon, and the pole faces are shaped to be equipotential surfaces. See Section 5.14 for further discussion.

5.9 *Methods of Solving Boundary-Value Problems in Magnetostatics*

The basic equations of magnetostatics are

$$\nabla \cdot \mathbf{B} = 0, \qquad \nabla \times \mathbf{H} = \mathbf{J} \tag{5.90}$$

with some constitutive relation between **B** and **H**. The variety of situations that can occur in practice is such that a survey of different techniques for solving boundary-value problems in magnetostatics is worthwhile.

A. Generally Applicable Method of the Vector Potential

Because of the first equation in (5.90) we can always introduce a vector potential $\mathbf{A}(\mathbf{x})$ such that

$$\mathbf{B} = \nabla \times \mathbf{A}$$

If we have an explicit constitutive relation, $\mathbf{H} = \mathbf{H}[\mathbf{B}]$, then the second equation in (5.90) can be written

$$\nabla \times \mathbf{H}[\nabla \times \mathbf{A}] = \mathbf{J}$$

This is, in general, a very complicated differential equation, even if the current distribution is simple, unless **H** and **B** are simply related. For linear media with $\mathbf{B} = \mu\mathbf{H}$, the equation becomes

$$\nabla \times \left(\frac{1}{\mu} \nabla \times \mathbf{A}\right) = \mathbf{J} \tag{5.91}$$

If μ is constant over a finite region of space, then in that region (5.91) can be written

$$\nabla(\nabla \cdot \mathbf{A}) - \nabla^2\mathbf{A} = \mu\mathbf{J} \tag{5.92}$$

With the choice of the Coulomb gauge ($\nabla \cdot \mathbf{A} = 0$), this becomes (5.31) with a modified current density, $(\mu/\mu_0)\mathbf{J}$. The situation closely parallels the treatment of uniform isotropic dielectric media where the effective charge density in the Poisson equation is $\epsilon_0\rho/\epsilon$. Solutions of (5.92) in different linear media must be matched across the boundary surfaces using the boundary conditions (5.88) or (5.89).

B. $\mathbf{J} = 0$*; Magnetic Scalar Potential*

If the current density vanishes in some finite region of space, the second equation in (5.90) becomes $\nabla \times \mathbf{H} = 0$. This implies that we can introduce a *magnetic scalar potential* Φ_M such that

$$\mathbf{H} = -\nabla\Phi_M \tag{5.93}$$

just as $\mathbf{E} = -\nabla\Phi$ in electrostatics. With an explicit constitutive relation, this time of $\mathbf{B} = \mathbf{B}[\mathbf{H}]$, the $\nabla \cdot \mathbf{B} = 0$ equation can be written

$$\nabla \cdot \mathbf{B}[-\nabla\Phi_M] = 0$$

Again, this is a very complicated differential equation unless the medium is *linear*, in which case the equation becomes

$$\nabla \cdot (\mu\nabla\Phi_M) = 0 \tag{5.94}$$

If μ is at least *piecewise constant*, in each region the magnetic scalar potential satisfies the Laplace equation,

$$\nabla^2\Phi_M = 0$$

The solutions in the different regions are connected via the boundary conditions (5.89). Note that in this last circumstance of piecewise constancy of μ, we can also write $\mathbf{B} = -\nabla\Psi_M$ with $\nabla^2\Psi_M = 0$. With this alternative scalar potential the boundary conditions (5.88) are appropriate.

The concept of a magnetic scalar potential can be used fruitfully for closed loops of current. It can be shown that Φ_M is proportional to the solid angle subtended by the boundary of the loop at the observation point. See Problem 5.1. Such a potential is evidently multiple-valued.

C. Hard Ferromagnets (M *given and* J = 0)

A common practical situation concerns "hard" ferromagnets, having a magnetization that is essentially independent of applied fields for moderate field strengths. Such materials can be treated as if they had a fixed, specified magnetization $\mathbf{M}(\mathbf{x})$.

(a) Scalar Potential

Since $\mathbf{J} = 0$, the magnetic scalar potential Φ_M can be employed. The first equation in (5.90) is written as

$$\nabla \cdot \mathbf{B} = \mu_0 \nabla \cdot (\mathbf{H} + \mathbf{M}) = 0$$

Then with (5.93) it becomes a magnetostatic Poisson equation,

$$\nabla^2 \Phi_M = -\rho_M \tag{5.95}$$

with the *effective magnetic-charge density*,

$$\rho_M = -\nabla \cdot \mathbf{M} \tag{5.96}$$

The solution for the potential Φ_M if there are no boundary surfaces is

$$\Phi_M(\mathbf{x}) = -\frac{1}{4\pi} \int \frac{\nabla' \cdot \mathbf{M}(\mathbf{x}')}{|\mathbf{x} - \mathbf{x}'|} d^3x' \tag{5.97}$$

If $\mathbf{M}$ is well behaved and localized, an integration by parts may be performed to yield

$$\Phi_M(\mathbf{x}) = \frac{1}{4\pi} \int \mathbf{M}(\mathbf{x}') \cdot \nabla' \left(\frac{1}{|\mathbf{x} - \mathbf{x}'|} \right) d^3x'$$

Then

$$\nabla' \left(\frac{1}{|\mathbf{x} - \mathbf{x}'|} \right) = -\nabla \left(\frac{1}{|\mathbf{x} - \mathbf{x}'|} \right)$$

may be used to give

$$\Phi_M(\mathbf{x}) = -\frac{1}{4\pi} \nabla \cdot \int \frac{\mathbf{M}(\mathbf{x}')}{|\mathbf{x} - \mathbf{x}'|} d^3x' \tag{5.98}$$

In passing we observe that far from the region of nonvanishing magnetization the potential may be approximated by

$$\begin{aligned} \Phi_M(\mathbf{x}) &\simeq -\frac{1}{4\pi} \nabla \left(\frac{1}{r} \right) \cdot \int \mathbf{M}(\mathbf{x}') \, d^3x' \\ &= \frac{\mathbf{m} \cdot \mathbf{x}}{4\pi r^3} \end{aligned}$$

where $\mathbf{m} = \int \mathbf{M}\, d^3x$ is the total magnetic moment. This is the scalar potential of a dipole, as can be seen from the electrostatic (4.10). Thus an arbitrary localized distribution of magnetization asymptotically has a dipole field with strength given by the total magnetic moment of the distribution.

While physical distributions of magnetization are mathematically well behaved and without discontinuities, it is sometimes convenient to idealize the reality and treat $\mathbf{M}(\mathbf{x})$ as if it were discontinuous. Thus, if a "hard" ferromagnet has a volume V and surface S, we specify $\mathbf{M}(\mathbf{x})$ inside V and assume that it falls suddenly to zero at the surface S. Application of the divergence theorem to ρ_M (5.96) in a Gaussian pillbox straddling the surface shows that there is an *effective magnetic surface-charge density*,

$$\sigma_M = \mathbf{n} \cdot \mathbf{M} \tag{5.99}$$

where $\mathbf{n}$ is the outwardly directed normal. Then instead of (5.97) the potential is given by

$$\Phi_M(\mathbf{x}) = -\frac{1}{4\pi}\int_V \frac{\nabla' \cdot \mathbf{M}(\mathbf{x}')}{|\mathbf{x} - \mathbf{x}'|}\, d^3x' + \frac{1}{4\pi}\oint_S \frac{\mathbf{n}' \cdot \mathbf{M}(\mathbf{x}')\, da'}{|\mathbf{x} - \mathbf{x}'|} \tag{5.100}$$

An important special case is that of uniform magnetization throughout the volume V. Then the first term vanishes; only the surface integral over σ_M contributes.

It is important to note that (5.98) is generally applicable, even for the limit of discontinuous distributions of $\mathbf{M}$, because we can introduce a limiting procedure *after* transforming (5.97) into (5.98) in order to discuss discontinuities in $\mathbf{M}$. *Never combine the surface integral of σ_M with (5.98)!*

(b) Vector Potential

If we choose to write $\mathbf{B} = \nabla \times \mathbf{A}$ to satisfy $\nabla \cdot \mathbf{B} = 0$ automatically, then we write the second equation of (5.90) as

$$\nabla \times \mathbf{H} = \nabla \times (\mathbf{B}/\mu_0 - \mathbf{M}) = 0$$

This leads to the Poisson equation for $\mathbf{A}$ in the Coulomb gauge,

$$\nabla^2 \mathbf{A} = -\mu_0 \mathbf{J}_M \tag{5.101}$$

where $\mathbf{J}_M$ is the effective magnetic current density (5.79). The solution for the vector potential in the absence of boundary surfaces is

$$\mathbf{A}(\mathbf{x}) = \frac{\mu_0}{4\pi}\int \frac{\nabla' \times \mathbf{M}(\mathbf{x}')}{|\mathbf{x} - \mathbf{x}'|}\, d^3x' \tag{5.102}$$

as was already shown in (5.78). An alternative form is given by the magnetization term in (5.77).

If the distribution of magnetization is discontinuous, it is necessary to add a surface integral to (5.102). Starting from (5.77) it can be shown that for $\mathbf{M}$ discontinuously falling to zero at the surface S bounding the volume V, the generalization of (5.102) is

$$\mathbf{A}(\mathbf{x}) = \frac{\mu_0}{4\pi}\int_V \frac{\nabla' \times \mathbf{M}(\mathbf{x}')}{|\mathbf{x} - \mathbf{x}'|}\, d^3x' + \frac{\mu_0}{4\pi}\oint_S \frac{\mathbf{M}(\mathbf{x}') \times \mathbf{n}'}{|\mathbf{x} - \mathbf{x}'|}\, da' \tag{5.103}$$

The effective surface current $(\mathbf{M} \times \mathbf{n})$ can also be understood by expressing the boundary condition (5.87) for tangential $\mathbf{H}$ in terms of $\mathbf{B}$ and $\mathbf{M}$. Again, if $\mathbf{M}$ is constant throughout the volume, only the surface integral survives.

5.10 Uniformly Magnetized Sphere

To illustrate the different methods possible for the solution of a boundary-value problem in magnetostatics, we consider in Fig. 5.10 the simple problem of a sphere of radius a, with a uniform permanent magnetization $\mathbf{M}$ of magnitude M_0 and parallel to the z axis, embedded in a nonpermeable medium.

The simplest method of solution is that of part $C(a)$ of the preceding section, via the magnetic scalar potential in spherical coordinates and a surface magnetic-charge density $\sigma_M(\theta)$. With $\mathbf{M} = M_0\boldsymbol{\epsilon}_3$ and $\sigma_M = \mathbf{n}\cdot\mathbf{M} = M_0 \cos\theta$, the solution (5.100) for the potential is

$$\Phi_M(r, \theta) = \frac{M_0 a^2}{4\pi} \int d\Omega' \frac{\cos\theta'}{|\mathbf{x} - \mathbf{x}'|}$$

With the expansion (3.38) or (3.70) for the inverse distance, only the $l = 1$ term survives. The potential is

$$\Phi_M(r, \theta) = \frac{1}{3} M_0 a^2 \frac{r_<}{r_>^2} \cos\theta \tag{5.104}$$

where $(r_<, r_>)$ are smaller and larger of (r, a). Inside the sphere, $r_< = r$ and $r_> = a$. Then $\Phi_M = (1/3)M_0 r \cos\theta = (1/3)M_0 z$. The magnetic field and magnetic induction inside the sphere are therefore

$$\mathbf{H}_{\text{in}} = -\frac{1}{3}\mathbf{M}, \qquad \mathbf{B}_{\text{in}} = \frac{2\mu_0}{3}\mathbf{M} \tag{5.105}$$

We note that $\mathbf{B}_{\text{in}}$ is parallel to $\mathbf{M}$, while $\mathbf{H}_{\text{in}}$ is antiparallel. Outside the sphere, $r_< = a$ and $r_> = r$. The potential is thus

$$\Phi_M = \frac{1}{3} M_0 a^3 \frac{\cos\theta}{r^2} \tag{5.106}$$

This is the potential of a dipole with dipole moment,

$$\mathbf{m} = \frac{4\pi a^3}{3}\mathbf{M} \tag{5.107}$$

For the *sphere* with uniform magnetization, the fields are not only dipole in character asymptotically, but also close to the sphere. For this special geometry (and this only) there are no higher multipoles.

The lines of $\mathbf{B}$ and $\mathbf{H}$ are shown in Fig. 5.11. The lines of $\mathbf{B}$ are continuous closed paths, but those of $\mathbf{H}$ terminate on the surface because there is an effective surface-charge density σ_M.

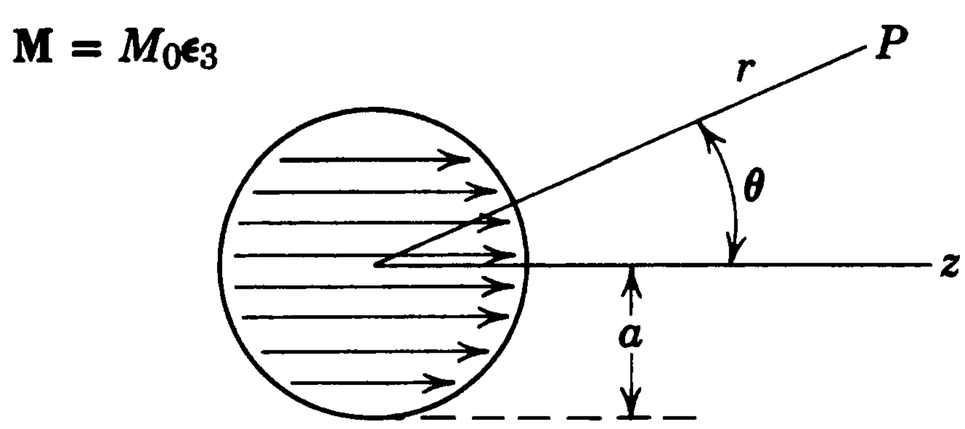

Figure 5.10

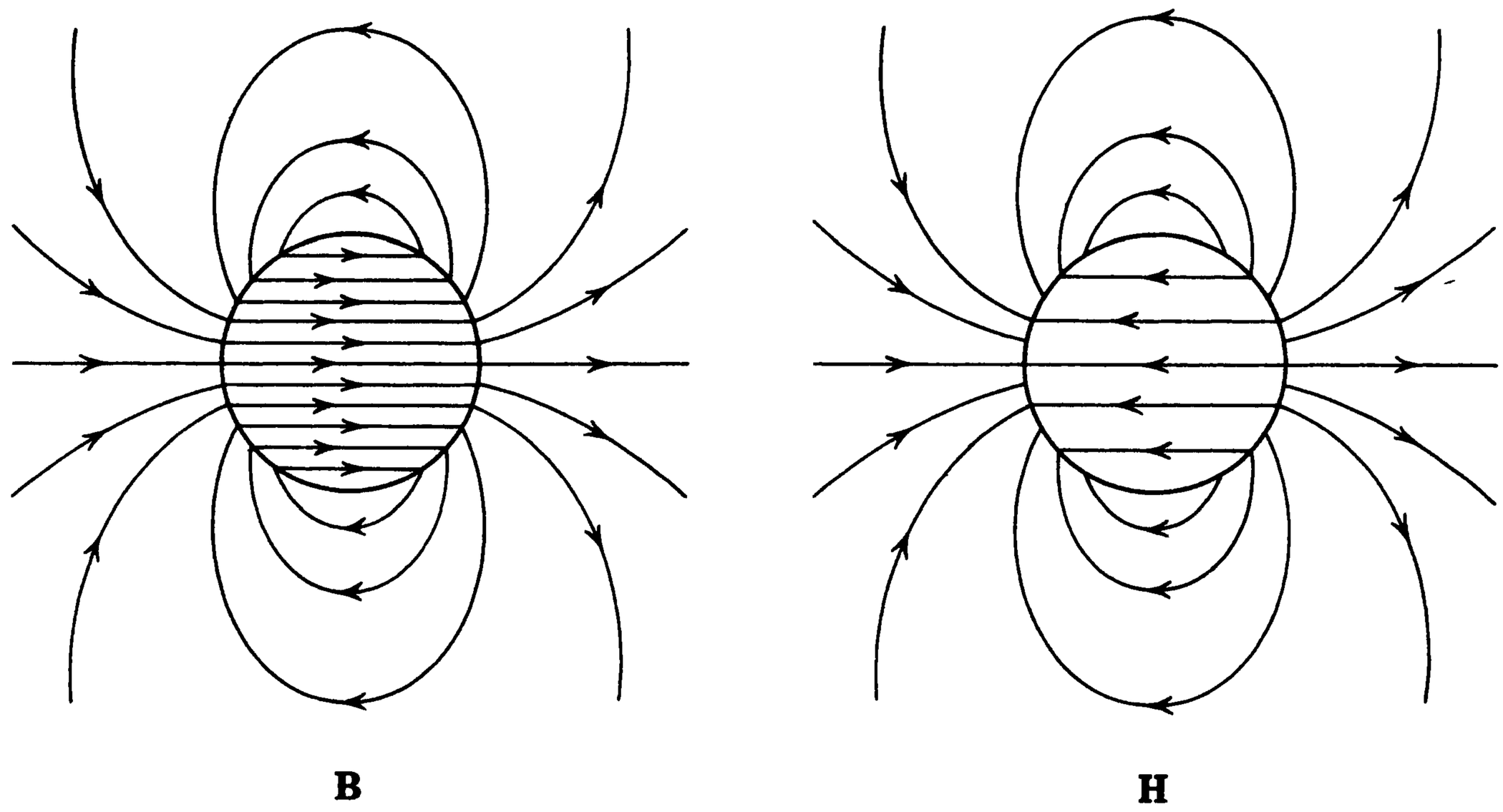

Figure 5.11 Lines of **B** and lines of **H** for a uniformly magnetized sphere. The lines of **B** are closed curves, but the lines of **H** originate on the surface of the sphere where the effective surface magnetic "charge," σ_M, resides.

Brief mention should be made of employing (5.98) instead of (5.100). With $\mathbf{M} = M_0\boldsymbol{\epsilon}_3$ inside the sphere, (5.98) gives

$$\Phi_M(r, \theta) = -\frac{1}{4\pi} M_0 \frac{\partial}{\partial z} \int_0^a r'^2\, dr' \int d\Omega' \frac{1}{|\mathbf{x} - \mathbf{x}'|} \tag{5.108}$$

Now only the $l = 0$ term in expansion of the inverse separation survives the angular integration and the integral is a function only of r. With $\partial r/\partial z = \cos\theta$, the potential is

$$\Phi_M(r, \theta) = -M_0 \cos\theta \frac{\partial}{\partial r} \int_0^a \frac{r'^2\, dr'}{r_>}$$

Integration over r' leads directly to the expression (5.104) for Φ_M.

An alternative solution can be accomplished by means of the vector potential and (5.103). Because **M** is uniform inside the sphere the volume current density $\mathbf{J}_M$ vanishes, but there is a surface contribution. With $\mathbf{M} = M_0\boldsymbol{\epsilon}_3$, we have

$$\begin{aligned} \mathbf{M} \times \mathbf{n}' &= M_0 \sin\theta' \boldsymbol{\epsilon}_\phi \\ &= M_0 \sin\theta'(-\sin\phi' \boldsymbol{\epsilon}_1 + \cos\phi' \boldsymbol{\epsilon}_2) \end{aligned}$$

Because of the azimuthal symmetry of the problem we can choose the observation point in the x-z plane ($\phi = 0$), just as in Section 5.5. Then only the y component of $\mathbf{M} \times \mathbf{n}'$ survives integration over the azimuth, giving an azimuthal component of the vector potential,

$$A_\phi(\mathbf{x}) = \frac{\mu_0}{4\pi} M_0 a^2 \int d\Omega' \frac{\sin\theta' \cos\phi'}{|\mathbf{x} - \mathbf{x}'|} \tag{5.109}$$

where $\mathbf{x}'$ has coordinates (a, θ', ϕ'). The angular factor can be written

$$\sin\theta' \cos\phi' = -\sqrt{\frac{8\pi}{3}}\, \mathrm{Re}[Y_{1,1}(\theta', \phi')] \tag{5.110}$$

Thus with expansion (3.70) for $|\mathbf{x} - \mathbf{x}'|$ only the $l = 1$, $m = 1$ term will survive. Consequently

$$A_\phi(\mathbf{x}) = \frac{\mu_0}{3} M_0 a^2 \left(\frac{r_<}{r_>^2}\right) \sin\theta \tag{5.111}$$

where $r_<$ ($r_>$) is the smaller (larger) of r and a. With only a ϕ component of $\mathbf{A}$, the components of the magnetic induction $\mathbf{B}$ are given by (5.38). Equation (5.111) evidently gives the uniform $\mathbf{B}$ inside and the dipole field outside, as found before.

5.11 *Magnetized Sphere in an External Field; Permanent Magnets*

In Section 5.10 we discussed the fields of a uniformly magnetized sphere. Because of the linearity of the field equations we can superpose a uniform magnetic induction $\mathbf{B}_0 = \mu_0 \mathbf{H}_0$ throughout all space. Then we have the problem of a uniformly magnetized sphere in an external field. From (5.105) we find that the magnetic induction and field inside the sphere are now

$$\left.\begin{aligned} \mathbf{B}_{\text{in}} &= \mathbf{B}_0 + \frac{2\mu_0}{3}\mathbf{M} \\ \mathbf{H}_{\text{in}} &= \frac{1}{\mu_0}\mathbf{B}_0 - \frac{1}{3}\mathbf{M} \end{aligned}\right\} \tag{5.112}$$

We now imagine that the sphere is not a permanently magnetized object, but rather a paramagnetic or diamagnetic substance of permeability μ. Then the magnetization $\mathbf{M}$ is a result of the application of the external field. To find the magnitude of $\mathbf{M}$ we use (5.84):

$$\mathbf{B}_{\text{in}} = \mu \mathbf{H}_{\text{in}} \tag{5.113}$$

Thus

$$\mathbf{B}_0 + \frac{2\mu_0}{3}\mathbf{M} = \mu\left(\frac{1}{\mu_0}\mathbf{B}_0 - \frac{1}{3}\mathbf{M}\right) \tag{5.114}$$

This gives a magnetization,

$$\mathbf{M} = \frac{3}{\mu_0}\left(\frac{\mu - \mu_0}{\mu + 2\mu_0}\right)\mathbf{B}_0 \tag{5.115}$$

We note that this is completely analogous to the polarization $\mathbf{P}$ of a dielectric sphere in a uniform electric field (4.57).

For a ferromagnetic substance, the arguments of the preceding paragraph fail. Equation (5.115) implies that the magnetization vanishes when the external field vanishes. The existence of permanent magnets contradicts this result. The nonlinear relation (5.85) and the phenomenon of hysteresis allow the creation of permanent magnets. We can solve equations (5.112) for one relation between $\mathbf{H}_{\text{in}}$ and $\mathbf{B}_{\text{in}}$ by eliminating $\mathbf{M}$:

$$\mathbf{B}_{\text{in}} + 2\mu_0 \mathbf{H}_{\text{in}} = 3\mathbf{B}_0 \tag{5.116}$$

The hysteresis curve provides the other relation between $\mathbf{B}_{\text{in}}$ and $\mathbf{H}_{\text{in}}$, so that specific values can be found for any external field. Equation (5.116) corresponds

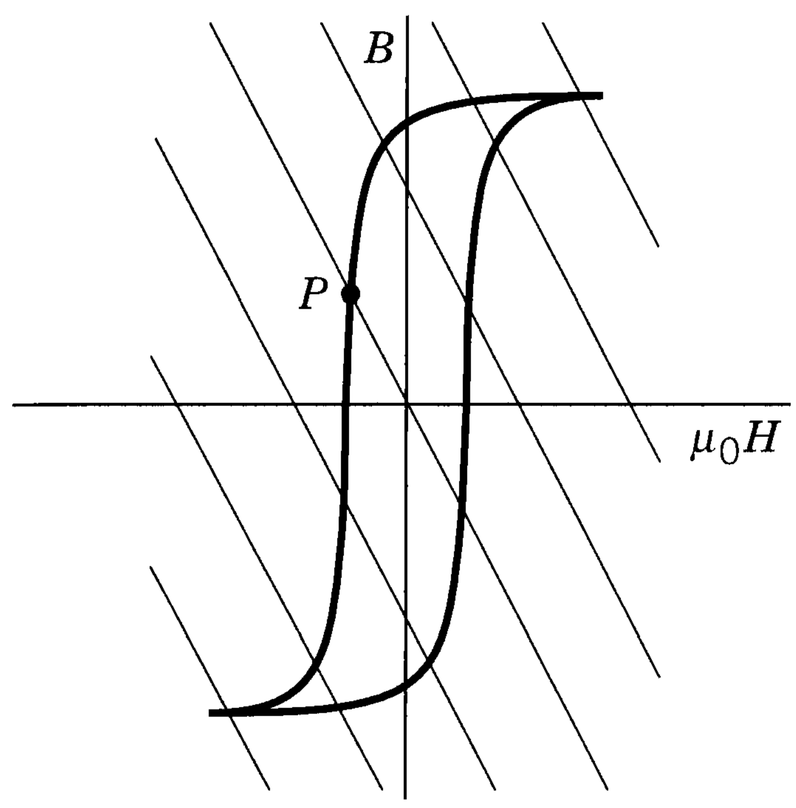

Figure 5.12

to a line with slope -2 on the hysteresis diagram with intercept $3B_0$ *on the y axis*, as in Fig. 5.12. Suppose, for example, that the external field is increased until the ferromagnetic sphere becomes saturated and then decreased to zero. The internal B and H will then be given by the point marked P in Fig. 5.12. The magnetization can be found from (5.112) with $\mathbf{B}_0 = 0$.

The relation (5.116) between $\mathbf{B}_{\text{in}}$ and $\mathbf{H}_{\text{in}}$ is specific to the sphere. For other geometries other relations pertain. The problem of the ellipsoid can be solved exactly and shows that the slope of the lines (5.116) range from zero for a flat disc to $-\infty$ for a long needle-like object. Thus a larger internal magnetic induction can be obtained with a rod geometry than with spherical or oblate spheroidal shapes.

5.12 *Magnetic Shielding, Spherical Shell of Permeable Material in a Uniform Field*

Suppose that a certain magnetic induction $\mathbf{B}_0 = \mu_0 \mathbf{H}_0$ exists in a region of empty space initially. A permeable body is now placed in the region. The lines of magnetic induction are modified. From our remarks at the end of Section 5.8 concerning media of very high permeability, we would expect the field lines to tend to be normal to the surface of the body. Carrying the analogy with conductors further, if the body is hollow, we would expect the field in the cavity to be smaller than the external field, vanishing in the limit $\mu \to \infty$. Such a reduction in field is said to be due to the *magnetic shielding* provided by the permeable material. It is of considerable practical importance, since essentially field-free regions are often necessary or desirable for experimental purposes or for the reliable working of electronic devices.

As an example of the phenomenon of magnetic shielding we consider a spherical shell of inner (outer) radius a (b), made of material of permeability μ, and placed in a formerly uniform constant magnetic induction $\mathbf{B}_0$, as shown in Fig. 5.13. We wish to find the fields $\mathbf{B}$ and $\mathbf{H}$ everywhere in space, but most particularly in the cavity ($r < a$), as functions of μ. Since there are no currents present, the magnetic field $\mathbf{H}$ is derivable from a scalar potential, $\mathbf{H} = -\nabla\Phi_M$. Furthermore, since $\mathbf{B} = \mu\mathbf{H}$, the divergence equation $\nabla \cdot \mathbf{B} = 0$ becomes $\nabla \cdot \mathbf{H} = 0$ in the various regions. Thus the potential Φ_M satisfies the Laplace

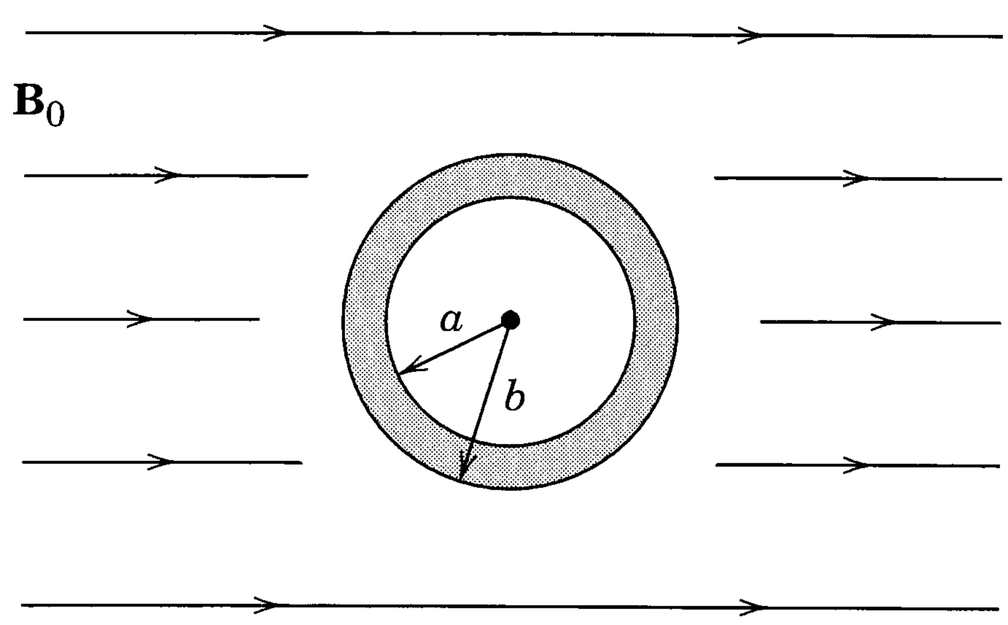

Figure 5.13

equation everywhere. The problem reduces to finding the proper solutions in the different regions to satisfy the boundary conditions (5.89) at $r = a$ and $r = b$.

For $r > b$, the potential must be of the form,

$$\Phi_M = -H_0 r \cos\theta + \sum_{l=0}^{\infty} \frac{\alpha_l}{r^{l+1}} P_l(\cos\theta) \tag{5.117}$$

to give the uniform field, $\mathbf{H} = \mathbf{H}_0$, at large distances. For the inner regions, the potential must be

$$\begin{aligned} a < r < b \qquad & \Phi_M = \sum_{l=0}^{\infty} \left(\beta_l r^l + \gamma_l \frac{1}{r^{l+1}} \right) P_l(\cos\theta) \\ r < a \qquad & \Phi_M = \sum_{l=0}^{\infty} \delta_l r^l P_l(\cos\theta) \end{aligned} \tag{5.118}$$

The boundary conditions at $r = a$ and $r = b$ are that H_θ and B_r be continuous. In terms of the potential Φ_M these conditions become

$$\begin{aligned} \frac{\partial \Phi_M}{\partial \theta}(b_+) &= \frac{\partial \Phi_M}{\partial \theta}(b_-) & \frac{\partial \Phi_M}{\partial \theta}(a_+) &= \frac{\partial \Phi_M}{\partial \theta}(a_-) \\ \mu_0 \frac{\partial \Phi_M}{\partial r}(b_+) &= \mu \frac{\partial \Phi_M}{\partial r}(b_-) & \mu \frac{\partial \Phi_M}{\partial r}(a_+) &= \mu_0 \frac{\partial \Phi_M}{\partial r}(a_-) \end{aligned} \tag{5.119}$$

The notation $b_\pm$ means the limit $r \to b$ approached from $r \gtrless b$, and similarly for $a_\pm$. These four conditions, which hold for all angles θ, are sufficient to determine the unknown constants in (5.117) and (5.118). All coefficients with $l \neq 1$ vanish. The $l = 1$ coefficients satisfy the four simultaneous equations

$$\begin{aligned} \alpha_1 - b^3\beta_1 - \gamma_1 &= b^3 H_0 \\ 2\alpha_1 + \mu' b^3 \beta_1 - 2\mu'\gamma_1 &= -b^3 H_0 \\ a^3\beta_1 + \gamma_1 - a^3\delta_1 &= 0 \\ \mu' a^3 \beta_1 - 2\mu'\gamma_1 - a^3\delta_1 &= 0 \end{aligned} \tag{5.120}$$

Here we have used the notation $\mu' = \mu/\mu_0$ to simplify the equations. The solutions for α_1 and δ_1 are

$$\begin{aligned} \alpha_1 &= \left[\frac{(2\mu' + 1)(\mu' - 1)}{(2\mu' + 1)(\mu' + 2) - 2\dfrac{a^3}{b^3}(\mu' - 1)^2} \right] (b^3 - a^3) H_0 \\ \delta_1 &= -\left[\frac{9\mu'}{(2\mu' + 1)(\mu' + 2) - 2\dfrac{a^3}{b^3}(\mu' - 1)^2} \right] H_0 \end{aligned} \tag{5.121}$$

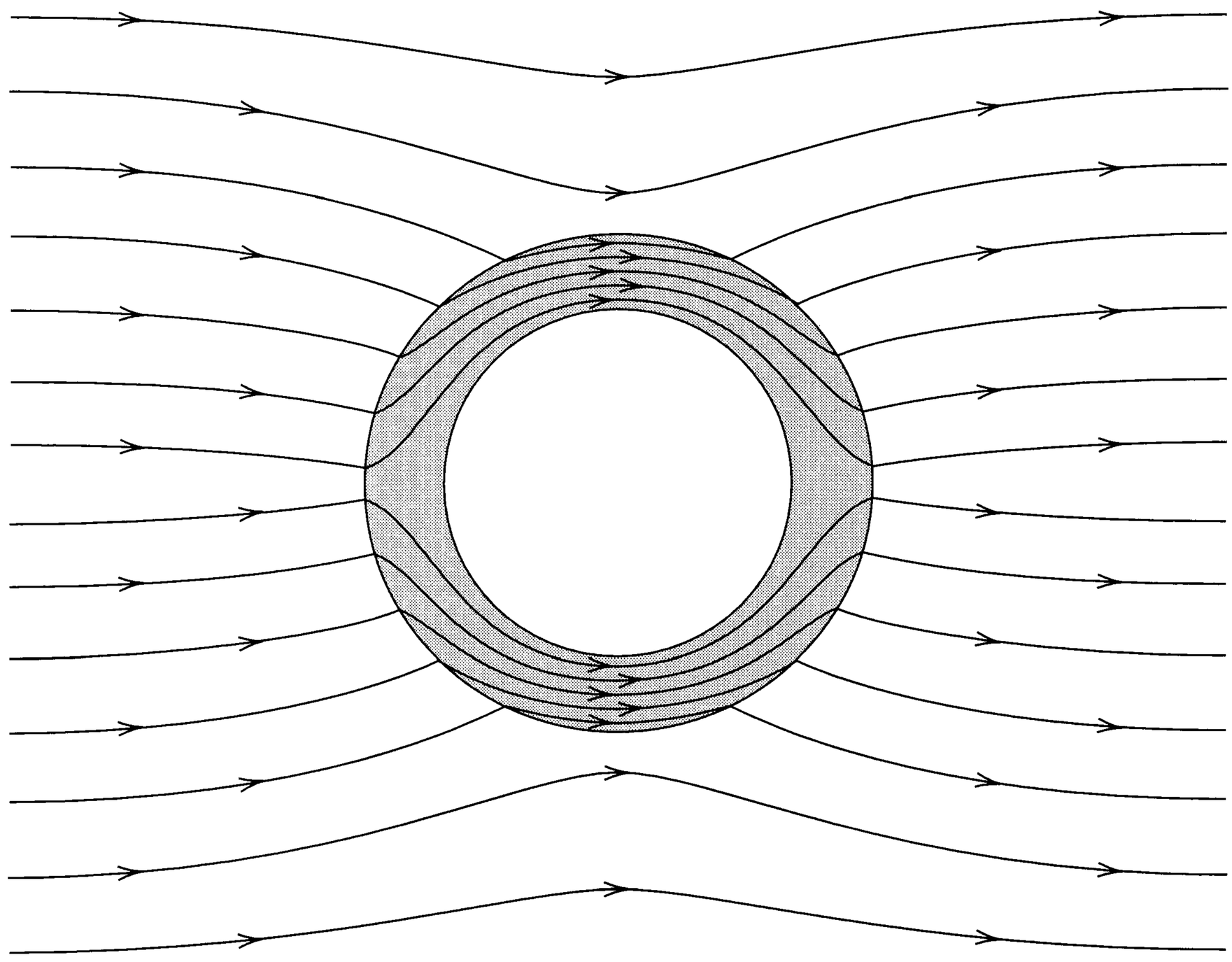

Figure 5.14 Shielding effect of a shell of highly permeable material.

The potential outside the spherical shell corresponds to a uniform field $\mathbf{H}_0$ plus a dipole field (5.41) with dipole moment α_1 oriented parallel to $\mathbf{H}_0$. Inside the cavity, there is a uniform magnetic field parallel to $\mathbf{H}_0$ and equal in magnitude to $-\delta_1$. For $\mu \gg \mu_0$, the dipole moment α_1 and the inner field $-\delta_1$ become

$$\begin{aligned} \alpha_1 &\to b^3 H_0 \\ -\delta_1 &\to \frac{9\mu_0}{2\mu\left(1 - \dfrac{a^3}{b^3}\right)} H_0 \end{aligned} \tag{5.122}$$

We see that the inner field is proportional to μ^{-1}. Consequently a shield made of high-permeability material with $\mu/\mu_0 \sim 10^3$ to 10^6 causes a great reduction in the field inside it, even with a relatively thin shell. Figure 5.14 shows the behavior of the lines of $\mathbf{B}$. The lines tend to pass through the permeable medium if possible.

5.13 Effect of a Circular Hole in a Perfectly Conducting Plane with an Asymptotically Uniform Tangential Magnetic Field on One Side

Section 3.13 discussed the electrostatic problem of a circular hole in a conducting plane with an asymptotically uniform normal electric field. Its magnetic counterpart has a uniform tangential magnetic field asymptotically. The two examples are useful in the treatment of small holes in wave guides and resonant cavities (see Section 9.5).

Before sketching the solution of the magnetostatic boundary-value problem, we must discuss what we mean by a perfect conductor. Static magnetic fields penetrate conductors, even excellent ones. The conductor modifies the fields only

because of its magnetic properties, not its conductivity, unless of course there is current flow inside. With time-varying fields it is often otherwise. It is shown in Section 5.18 that at the interface between conductor and nonconductor, fields with harmonic time dependence penetrate only a distance of the order of $\delta = (2/\mu\omega\sigma)^{1/2}$ into the conductor, where ω is the frequency and σ the conductivity. For any nonvanishing ω, therefore, the skin depth $\delta \to 0$ as $\sigma \to \infty$. Oscillating electric and magnetic fields do not exist inside a perfect conductor. We *define* magnetostatic problems with perfect conductors as the limit of harmonically varying fields as $\omega \to 0$, provided at the same time that $\omega\sigma \to \infty$. Then the magnetic field can exist outside and up to the surface of the conductor, but not inside. The boundary conditions (5.86) and (5.87) show that $\mathbf{B} \cdot \mathbf{n} = 0$, $\mathbf{n} \times \mathbf{H} = \mathbf{K}$ at the surface. These boundary conditions are the magnetostatic counterparts of the electrostatic boundary conditions, $\mathbf{E}_{\tan} = 0$, $\mathbf{D} \cdot \mathbf{n} = \sigma$, at the surface of a conductor, where in this last relation σ is the surface-charge density, not the conductivity!

We consider a perfectly conducting plane at $z = 0$ with a hole of radius a centered at the origin, as shown in Fig. 5.15. For simplicity we assume that the medium surrounding the plane is uniform, isotropic, and linear and that there is a uniform tangential magnetic field $\mathbf{H}_0$ in the y direction in the region $z > 0$ far from the hole, and zero field asymptotically for $z < 0$. Other possibilities can be obtained by linear superposition. Because there are no currents present except on the surface $z = 0$, we can use $\mathbf{H} = -\nabla\Phi_M$, with the magnetic scalar potential $\Phi_M(\mathbf{x})$ satisfying the Laplace equation with suitable mixed boundary conditions. Then we can parallel the solution of Section 3.13.

The potential is written as

$$\Phi_M(x) = \begin{cases} -H_0 y + \Phi^{(1)} & \text{for } z > 0 \\ -\Phi^{(1)} & \text{for } z < 0 \end{cases} \tag{5.123}$$

The reversal of sign for the added potential $\Phi^{(1)}$ below the plane is a consequence of the symmetry properties of the added fields—$H_x^{(1)}$ and $H_y^{(1)}$ are odd in z, while $H_z^{(1)}$ and $\Phi^{(1)}$ are even in z. This can be inferred from (5.14) with the realization that the effective current is only on the surface $z = 0$, as is the effective magnetic-charge density that determines the scalar potential $\Phi^{(1)}$.

From (3.106) the added potential can be written in cylindrical coordinates as

$$\Phi^{(1)}(\mathbf{x}) = \int_0^\infty dk\, A(k) e^{-k|z|} J_1(k\rho) \sin\phi \tag{5.124}$$

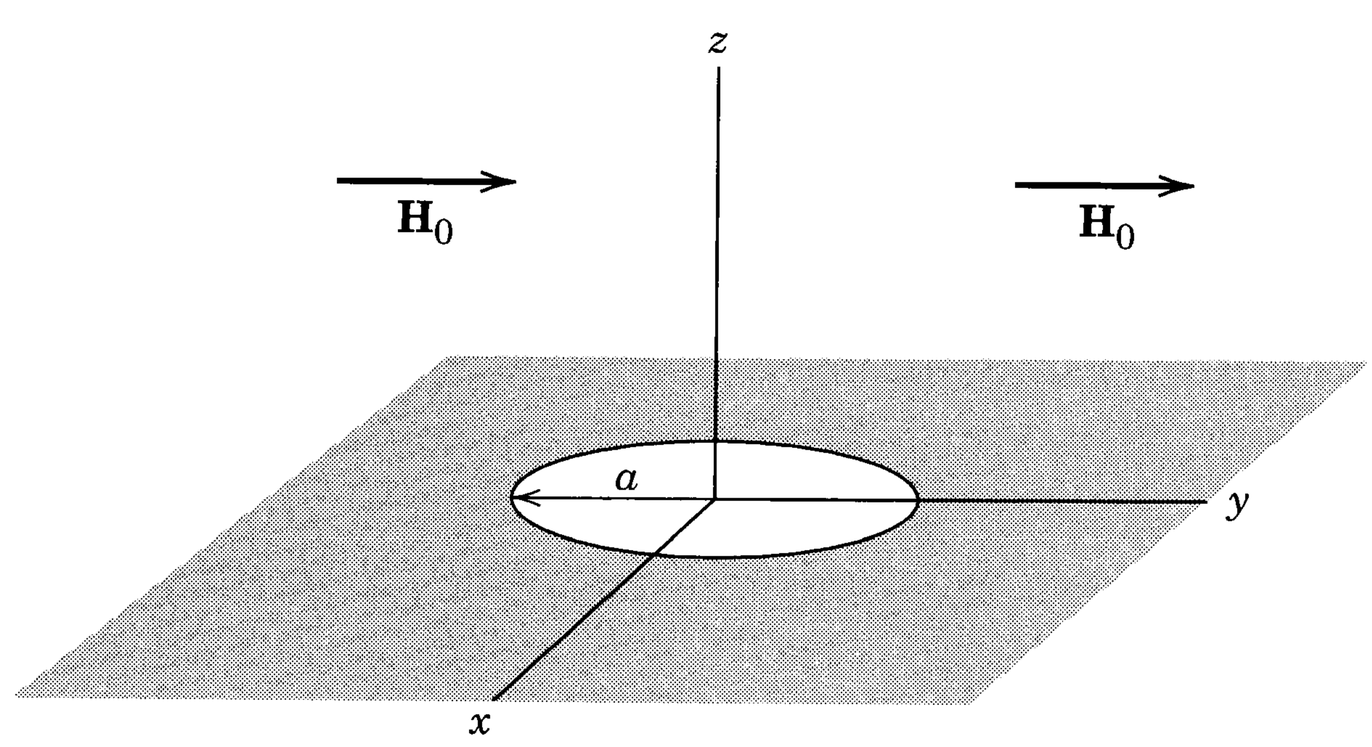

Figure 5.15

Only $m = 1$ enters because the hole is cylindrically symmetric and the asymptotic field varies as $y = \rho \sin \phi$. From the boundary conditions on normal $\mathbf{B}$ and tangential $\mathbf{H}$ we find that the boundary conditions on the full potential Φ_M are

$$\begin{aligned} &\Phi_M \text{ continuous across } z = 0 && \text{for } 0 \le \rho < a \\ &\frac{\partial \Phi_M}{\partial z} = 0 \text{ at } z = 0 && \text{for } a < \rho < \infty \end{aligned}$$

These requirements imply the dual integral equations,

$$\begin{aligned} \int_0^\infty dk\, A(k) J_1(k\rho) &= H_0 \rho/2 && \text{for } 0 \le \rho < a \\ \int_0^\infty dk\, kA(k) J_1(k\rho) &= 0 && \text{for } a < \rho < \infty \end{aligned} \tag{5.125}$$

These are closely related to, but different from, the electrostatic set (3.178) or (3.179). The necessary pair here are

$$\begin{aligned} \int_0^\infty dy\, g(y) J_n(yx) &= x^n && \text{for } 0 \le x < 1 \\ \int_0^\infty dy\, yg(y) J_n(yx) &= 0 && \text{for } 1 < x < \infty \end{aligned} \tag{5.126}$$

with solution,

$$g(y) = \frac{2\Gamma(n+1)}{\sqrt{\pi}\Gamma(n+\frac{1}{2})} j_n(y) = \frac{\Gamma(n+1)}{\Gamma(n+\frac{1}{2})} \left(\frac{2}{y}\right)^{1/2} J_{n+1/2}(y) \tag{5.127}$$

In (5.125) we have $g = 2A(k)/H_0 a^2$, $n = 1$, $x = \rho/a$, and $y = ka$. Hence

$$A(k) = \frac{2H_0 a^2}{\pi} j_1(ka) \tag{5.128}$$

The added potential is therefore

$$\Phi^{(1)}(\mathbf{x}) = \frac{2H_0 a^2}{\pi} \int_0^\infty dk\, j_1(ka) e^{-k|z|} J_1(k\rho) \sin \phi \tag{5.129}$$

By methods similar to those of Section 3.13 it can be shown that far from the opening the added potential has the asymptotic form

$$\Phi^{(1)}(\mathbf{x}) \to \frac{2H_0 a^3}{3\pi} \cdot \frac{y}{r^3} \tag{5.130}$$

This is the potential of a dipole aligned in the y direction, the direction of $\mathbf{H}_0$. Because of the signs in (5.123), the circular hole is equivalent at large distances to a magnetic dipole with moment

$$\mathbf{m} = \pm \frac{8a^3}{3} \mathbf{H}_0 \qquad \text{for } z \gtrless 0 \tag{5.131}$$

where $\mathbf{H}_0$ is the tangential magnetic field on the $z = 0^+$ side of the plane in the absence of the hole. Later (Fig. 9.4) we show qualitatively how the magnetic

field lines distort to give rise to the dipole field. In the opening itself ($z = 0$, $0 \leq \rho < a$) the tangential and normal components of the magnetic field are

$$\mathbf{H}_{\tan} = \frac{1}{2}\mathbf{H}_0$$
$$H_z(\rho, 0) = \frac{2H_0}{\pi}\frac{\rho}{\sqrt{a^2 - \rho^2}}\sin\phi \tag{5.132}$$

Comparison with the corresponding electrostatic problem in Section 3.13 shows similarities and differences. Roughly speaking, the roles of tangential and normal components of fields have been interchanged. The effective dipoles point in the directions of the asymptotic fields, but the magnetic moment (5.131) is a factor of 2 larger than the electrostatic moment (3.183) for the same field strengths. For *arbitrarily shaped holes* the far field in the electrostatic case is still that of a dipole normal to the plane, while the magnetic case has its effective dipole in the plane, but now the direction of the magnetic dipole depends on both the field direction and the orientation of the hole (the hole has an anisotropic magnetic susceptibility).

5.14 Numerical Methods for Two-Dimensional Magnetic Fields

Magnetic fields in the presence of iron or other highly permeable materials can be evaluated numerically in two dimensions by the relaxation method described in Section 1.13 or, more generally, by the method of finite element analysis of Section 2.12. The problems can be classed as "interior" or "exterior," depending whether the current flow and/or magnetized material and desired field are within the same region.

First consider the boundary conditions for the field components at the smooth interface of a highly permeable medium and a nonpermeable one. Locally, the interface can be approximated by a plane. The boundary conditions are that the tangential component of **H** and the normal component of **B** are continuous across the interface, if there are no surface currents. Figure 5.16 is a

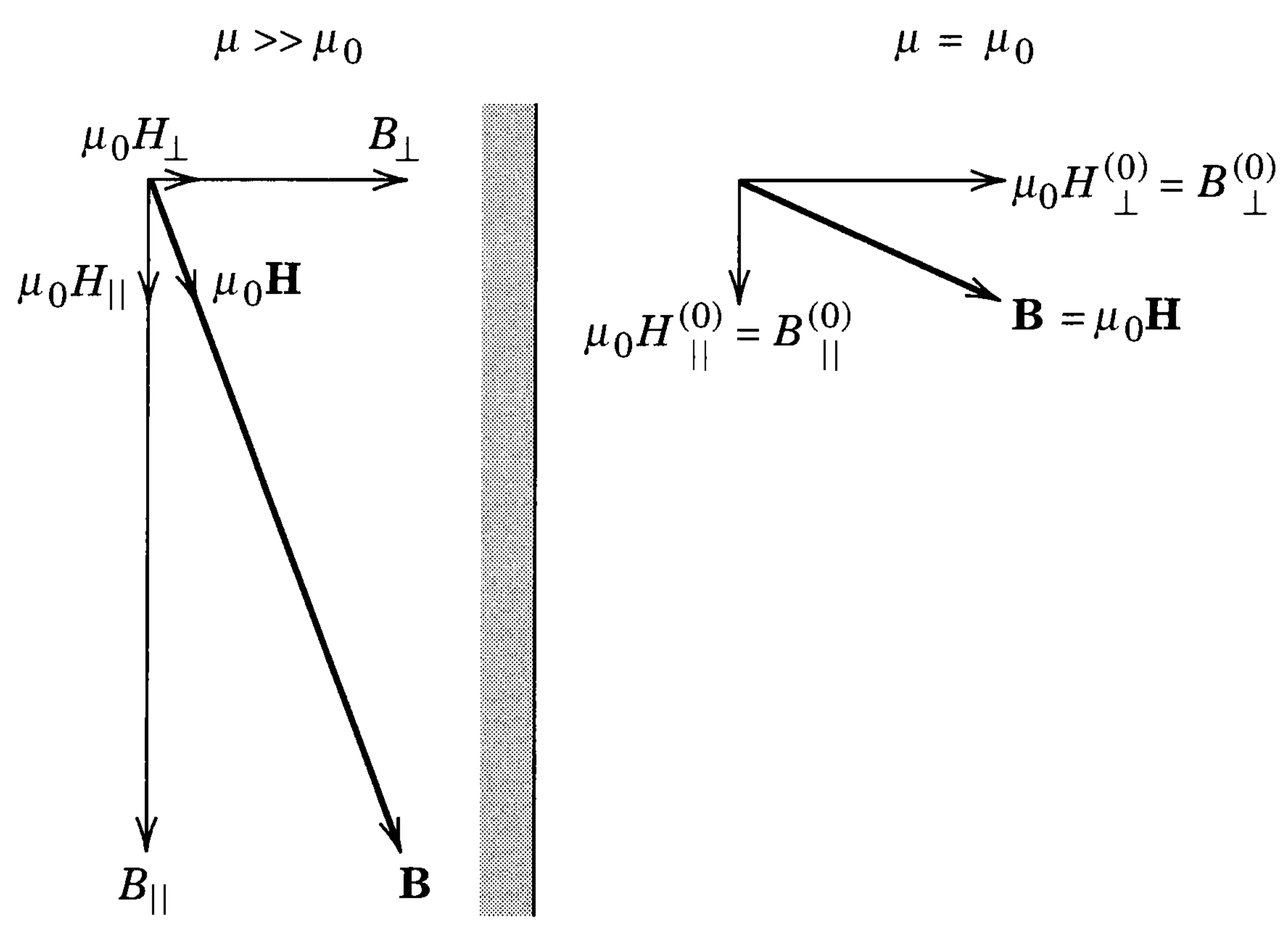

Figure 5.16 Illustration of the effect of large permeability on the components of the magnetic induction and magnetic field on either side of an interface. The sketch has $\mu \approx 5\mu_0$, not a very high permeability!

sketch of the behavior of the field components, similar to Fig. 5.9 but showing both **B** and **H** components. For a given "external" field $\mathbf{B}^{(0)}$ in the nonpermeable region, the components of **B** (and **H**) in the highly permeable medium are more closely parallel to the interface. The magnitude of the magnetic induction just inside the highly permeable medium is

$$|\mathbf{B}|^2 = B_\perp^{(0)2} + \frac{\mu^2}{\mu_0^2} B_\parallel^{(0)2}$$

while the energy per unit volume (see Section 5.16) there is

$$\frac{1}{2\mu}|\mathbf{B}|^2 = \frac{1}{2\mu} B_\perp^{(0)2} + \frac{\mu}{2\mu_0^2} B_\parallel^{(0)2}$$

These two relations are immediately useful in learning the appropriate boundary conditions of "exterior" and "interior" problems in the limit $\mu/\mu_0 \to \infty$.

The most familiar static magnetic fields are those around a permanent magnet of high permeability or an iron core excited by remote current-carrying windings. The region of interest is the nonpermeable region bounded by the highly permeable pole face or faces—the archetypal "exterior" problem. If we suppose that the stored energy within the highly permeable medium is finite, the energy relation shows that, as $\mu/\mu_0 \to \infty$, the parallel component of the magnetic field outside must vanish: the "external" magnetic field at the surface is perpendicular to the interface. These are just the boundary conditions for the electrostatic field at the surface of a conducting boundary, as mentioned at the end of Section 5.8. If there are no currents within the nonpermeable region of interest, then $\nabla \times \mathbf{H} = 0$ there and we can write $\mathbf{H} = -\nabla\Phi_M$. The magnetic scalar potential satisfies the Laplace equation, $\nabla^2\Phi_M = 0$, with the "pole pieces," surfaces of constant potential; the analogy with electrostatics is complete.

For simplicity we restrict our discussion of "interior" problems to two dimensions, with steady current flow only in the third direction in a uniform, highly permeable conducting medium. We are interested in the magnetic induction within the medium—for example, a long iron third rail of a subway system. The current flow produces a magnetic induction both inside and outside the medium. Whatever the magnitudes of the parallel and perpendicular components just outside, the boundary conditions assure that **B** is parallel to the surface of the medium just inside as $\mu/\mu_0 \to \infty$.

If the current density has only a z component, $J_z(x, y)$, the vector potential **A** has only a z component, $A_z(x, y)$, which satisfies the Poisson equation, $\nabla^2 A_z = -\mu J_z$. The field components are $B_x = \partial A_z/\partial y$, $B_y = -\partial A_z/\partial x$, $B_z = 0$. If the internal field **B** is tangential to the boundary C of the region R sketched in Fig. 5.17, we have $\mathbf{n} \cdot (\nabla_\perp \times \mathbf{A}) = (\mathbf{n} \times \nabla_\perp) \cdot \mathbf{A} = 0$ on C. The gradient operator in the x-y plane can be resolved into components parallel to and perpendicular to **n**. The boundary condition thus becomes

$$\frac{\partial A_z}{\partial l} = 0$$

where dl is an element of arc length along C. The vector potential is constant along the boundary curve C. Furthermore, we can infer that in the interior region R the magnetic field lines are parallel to the contours of constant A_z. Because $\mathbf{B} = \nabla \times \mathbf{A}$, the density of lines of force is given by the derivative of A_z perpen-

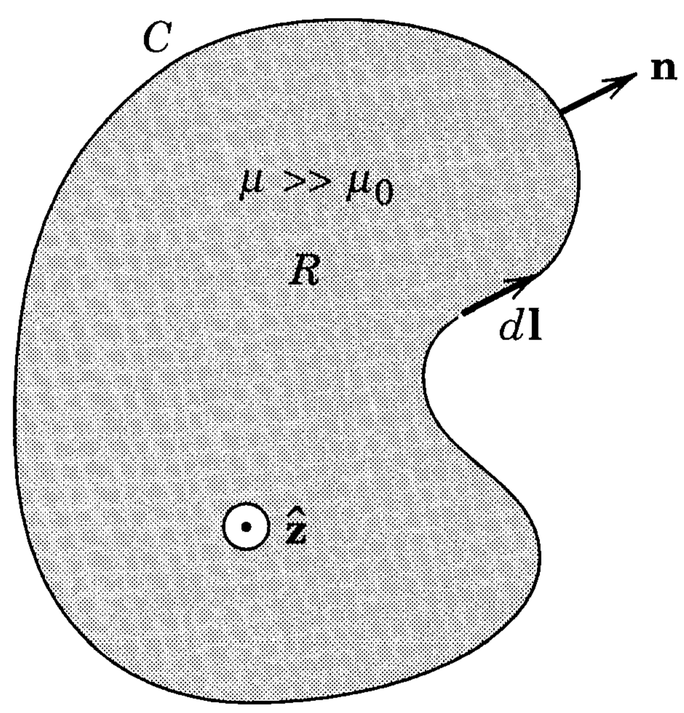

Figure 5.17 Cross section of a long, highly permeable cylindrical conductor with current flow along its length.

dicular to the surfaces of constant value; the spacing of contours of constant A_z with equal increments in A_z will show the intensity of the field as well as its direction.

In implementing numerical methods of solution of the Poisson equation, $\nabla^2 A_z = -\mu J_z$, boundary conditions must be specified. That seems to mean the constant value of A_z on the contour C. But the vector potential is arbitrary to within addition of the gradient of a scalar function χ. With the choice, $\chi = -A_0 \cdot z$, where A_0 is the yet undetermined value of A_z on C, we define $A_z' = A_z(x, y) - A_0$. The Poisson equation problem to be solved then becomes $\nabla^2 A_z' = \mu J_z$ within R with the homogeneous boundary condition $A_z' = 0$ on the boundary C. The value of A_z on C is not physically meaningful and is not needed. With $J_z(x, y)$ specified, the solution by the relaxation technique proceeds as in Section 1.13.

Powerful numerical codes exist to solve more realistic magnetic field problems where, for example, the different permeable materials have large, but not infinite, values of μ_i/μ_0. References are given at the end of the chapter.

5.15 *Faraday's Law of Induction*

The first quantitative observations relating time-dependent electric and magnetic fields were made by Faraday (1831) in experiments on the behavior of currents in circuits placed in time-varying magnetic fields. Faraday observed that a transient current is induced in a circuit if (a) the steady current flowing in an adjacent circuit is turned on or off, (b) the adjacent circuit with a steady current flowing is moved relative to the first circuit, (c) a permanent magnet is thrust into or out of the circuit. No current flows unless either the adjacent current changes or there is relative motion. Faraday attributed the transient current flow to a changing magnetic flux linked by the circuit. The changing flux induces an electric field around the circuit, the line integral of which is called the *electromotive force*, $\mathscr{E}$. The electromotive force causes a current flow, according to Ohm's law.

We now express Faraday's observations in quantitative mathematical terms. Let the circuit C be bounded by an open surface S with unit normal $\mathbf{n}$, as in Fig. 5.18. The magnetic induction in the neighborhood of the circuit is $\mathbf{B}$. The magnetic flux linking the circuit is defined by

$$F = \int_S \mathbf{B} \cdot \mathbf{n} \, da \tag{5.133}$$

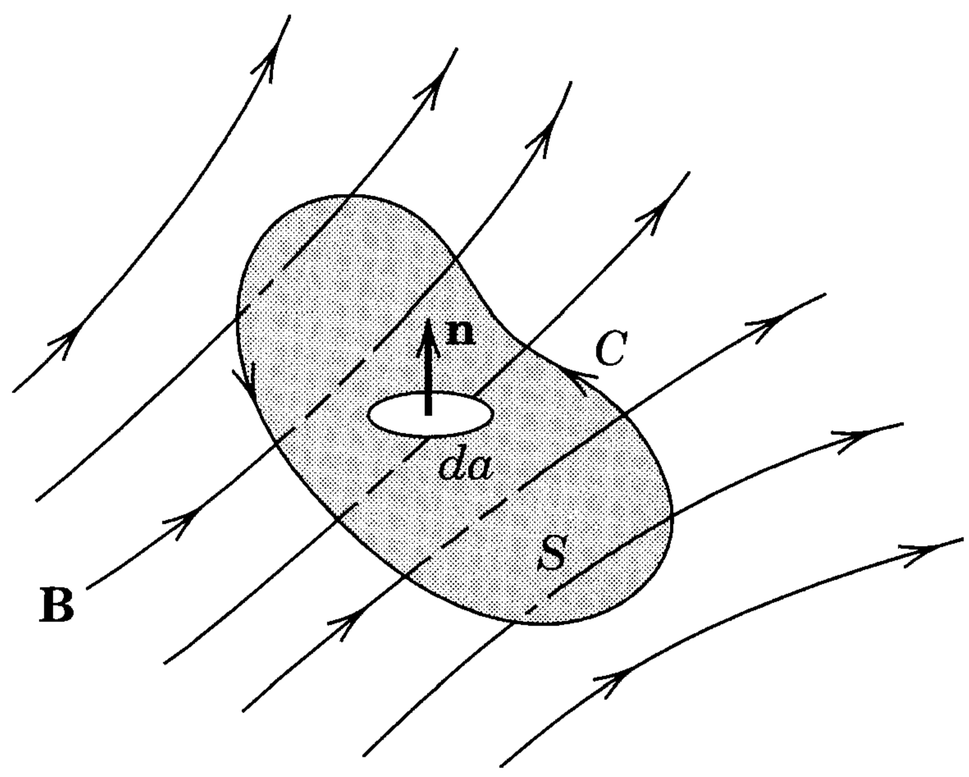

Figure 5.18

The electromotive force around the circuit is

$$\mathscr{E} = \oint_C \mathbf{E}' \cdot d\mathbf{l} \tag{5.134}$$

where $\mathbf{E}'$ is the electric field at the element $d\mathbf{l}$ of the circuit C. Faraday's observations are summed up in the mathematical law,

$$\mathscr{E} = -k \frac{dF}{dt} \tag{5.135}$$

The induced electromotive force around the circuit is proportional to the time rate of change of magnetic flux linking the circuit. The sign is specified by Lenz's law, which states that the induced current (and accompanying magnetic flux) is in such a direction as to oppose the change of flux through the circuit.

The constant of proportionality k depends on the choice of units for the electric and magnetic field quantities. It is not, as might at first be supposed, an independent empirical constant to be determined from experiment. As we will see immediately, once the units and dimensions in Ampère's law have been chosen, the magnitude and dimensions of k follow from the assumption of Galilean invariance for Faraday's law. For SI units, $k = 1$; for Gaussian units, $k = c^{-1}$, where c is the velocity of light.

Before the development of special relativity (and even afterward, when investigators were dealing with relative speeds that were small compared with the velocity of light), it was understood, although not often explicitly stated, by all physicists that physical laws should be invariant under Galilean transformations. That is, physical phenomena are the same when viewed by two observers moving with a constant velocity $\mathbf{v}$ relative to one another, provided the coordinates in space and time are related by the Galilean transformation, $\mathbf{x}' = \mathbf{x} - \mathbf{v}t$, $t' = t$. In particular, consider Faraday's observations. It is expected and experimentally verified that the same current is induced in a secondary circuit whether *it is moved* while the primary circuit through which current is flowing is stationary or it is held fixed while *the primary circuit is moved* in the same relative manner.

Let us now consider Faraday's law for a moving circuit and see the consequences of Galilean invariance. Expressing (5.135) in terms of the integrals over $\mathbf{E}'$ and $\mathbf{B}$, we have

$$\oint_C \mathbf{E}' \cdot d\mathbf{l} = -k \frac{d}{dt} \int_S \mathbf{B} \cdot \mathbf{n}\, da \tag{5.136}$$

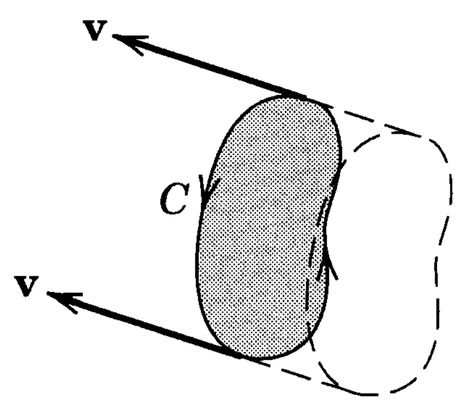

Figure 5.19

The induced electromotive force is proportional to the *total* time derivative of the flux—the flux can be changed by changing the magnetic induction or by changing the shape or orientation or position of the circuit. In form (5.136) we have a far-reaching generalization of Faraday's law. The circuit C can be thought of as any closed geometrical path in space, not necessarily coincident with an electric circuit. Then (5.136) becomes a relation between the fields themselves. It is important to note, however, that the electric field, $\mathbf{E}'$ is the electric field at $d\mathbf{l}$ in the coordinate system or medium in which $d\mathbf{l}$ is at rest, since it is that field that causes current to flow if a circuit is actually present.

If the circuit C is moving with a velocity $\mathbf{v}$ in some direction, as shown in Fig. 5.19, the total time derivative in (5.136) must take into account this motion. The flux through the circuit may change because (a) the flux changes with time at a point, or (b) the translation of the circuit changes the location of the boundary. It is easy to show that the result for the total time derivative of flux through the moving circuit is*

$$\frac{d}{dt}\int_S \mathbf{B}\cdot\mathbf{n}\,da = \int_S \frac{\partial\mathbf{B}}{\partial t}\cdot\mathbf{n}\,da + \oint_C (\mathbf{B}\times\mathbf{v})\cdot d\mathbf{l} \tag{5.137}$$

Equation (5.136) can now be written in the form,

$$\oint_C [\mathbf{E}' - k(\mathbf{v}\times\mathbf{B})]\cdot d\mathbf{l} = -k\int_S \frac{\partial\mathbf{B}}{\partial t}\cdot\mathbf{n}\,da \tag{5.138}$$

This is an equivalent statement of Faraday's law applied to the moving circuit C. But we can choose to interpret it differently. We can think of the circuit C and surface S as instantaneously at a certain position in space in the laboratory. Applying Faraday's law (5.136) to that fixed circuit, we find

$$\oint_C \mathbf{E}\cdot d\mathbf{l} = -k\int_S \frac{\partial\mathbf{B}}{\partial t}\cdot\mathbf{n}\,da \tag{5.139}$$

*For a general vector field there is an added term, $\int_S(\nabla\cdot\mathbf{B})\mathbf{v}\cdot\mathbf{n}\,da$, which gives the contribution of the sources of the vector field swept over by the moving circuit. The general result follows most easily from the use of the convective derivative,

$$\frac{d}{dt} = \frac{\partial}{\partial t} + \mathbf{v}\cdot\nabla$$

Thus

$$\frac{d\mathbf{B}}{dt} = \frac{\partial\mathbf{B}}{\partial t} + (\mathbf{v}\cdot\nabla)\mathbf{B} = \frac{\partial\mathbf{B}}{\partial t} + \nabla\times(\mathbf{B}\times\mathbf{v}) + \mathbf{v}(\nabla\cdot\mathbf{B})$$

where $\mathbf{v}$ is treated as a fixed vector in the differentiation. Use of Stokes's theorem on the second term yields (5.137).

where $\mathbf{E}$ is now the electric field in the laboratory. The assumption of Galilean invariance implies that the left-hand sides of (5.138) and (5.139) must be equal. This means that the electric field $\mathbf{E}'$ in the moving coordinate system of the circuit is

$$\mathbf{E}' = \mathbf{E} + k(\mathbf{v} \times \mathbf{B}) \tag{5.140}$$

To determine the constant k we merely observe the significance of $\mathbf{E}'$. A charged particle (e.g., one of the conduction electrons) essentially at rest in a moving circuit will experience a force $q\mathbf{E}'$. When viewed from the laboratory, the charge represents a current $\mathbf{J} = q\mathbf{v}\delta(\mathbf{x} - \mathbf{x}_0)$. From the magnetic force law (5.7) or (5.12) it is evident that this current experiences a force in agreement with (5.140) provided the constant k is equal to unity (SI) or $1/c$ (Gaussian).

Thus we see that, with our choice of units for charge and current, Galilean covariance requires that the present constant k be equal to the constant appearing in the definition of the magnetic field (5.4). Faraday's law (5.136) therefore reads

$$\oint_C \mathbf{E}' \cdot d\mathbf{l} = -\frac{d}{dt}\int_S \mathbf{B} \cdot \mathbf{n}\, da \tag{5.141}$$

where $\mathbf{E}'$ is the electric field at $d\mathbf{l}$ in its rest frame of coordinates. The time derivative on the right is a *total* time derivative (5.137). As a by-product we have found that the electric field $\mathbf{E}'$ in a coordinate frame moving with a velocity $\mathbf{v}$ relative to the laboratory is

$$\mathbf{E}' = \mathbf{E} + \mathbf{v} \times \mathbf{B} \tag{5.142}$$

Because we considered a Galilean transformation, the result (5.142) is an approximation valid only for speeds small compared to the speed of light. (The relativistic expressions are derived in Section 11.10.) Faraday's law is no approximation, however. The Galilean transformation was used merely to evaluate the constant k in (5.135), a task for which it was completely adequate.

Faraday's law (5.141) can be put in differential form by use of Stokes's theorem, provided the circuit is held fixed in the chosen reference frame (to have $\mathbf{E}$ and $\mathbf{B}$ defined in the *same* frame). The transformation of the electromotive force integral into a surface integral leads to

$$\int_S \left(\nabla \times \mathbf{E} + \frac{\partial \mathbf{B}}{\partial t}\right) \cdot \mathbf{n}\, da = 0$$

Since the circuit C and bounding surface S are arbitrary, the integrand must vanish at all points in space.

Thus the differential form of Faraday's law is

$$\nabla \times \mathbf{E} + \frac{\partial \mathbf{B}}{\partial t} = 0 \tag{5.143}$$

We note that this is the time-dependent generalization of the statement, $\nabla \times \mathbf{E} = 0$, for electrostatic fields.

5.16 Energy in the Magnetic Field

In discussing steady-state magnetic fields in the first 14 sections of this chapter we avoided the question of field energy and energy density. The reason was that the creation of a steady-state configuration of currents and associated magnetic fields involves an initial transient period during which the currents and fields are brought from zero to the final values. For such time-varying fields there are induced electromotive forces that cause the sources of current to do work. Since the energy in the field is by definition the total work done to establish it, we must consider these contributions.

Suppose for a moment that we have only a single circuit with a constant current I flowing in it. If the flux through the circuit changes, an electromotive force $\mathscr{E}$ is induced around it. To keep the current constant, the sources of current must do work. To determine the rate, we note that the time rate of change of energy of a particle with velocity $\mathbf{v}$ acted on by a force $\mathbf{F}$ is $dE/dt = \mathbf{v} \cdot \mathbf{F}$. With a changing flux, the added field $\mathbf{E}'$ on each conduction electron of charge q and mean velocity $\mathbf{v}$ gives rise to a change in energy per unit time of $q\mathbf{v} \cdot \mathbf{E}'$ per electron. Summing over all the electrons in the circuit, we find that the sources do work to maintain the current at the rate

$$\frac{dW}{dt} = -I\mathscr{E} = I\frac{dF}{dt}$$

the negative sign following from Lenz's law. This is in addition to ohmic losses in the circuit, which are not to be included in the magnetic-energy content. Thus, if the flux change through a circuit carrying a current I is δF, the work done by the sources is

$$\delta W = I\,\delta F$$

Now we consider the problem of the work done in establishing a general steady-state distribution of currents and fields. We may imagine that the buildup process occurs at an infinitesimal rate so that $\nabla \cdot \mathbf{J} = 0$ holds to any desired degree of accuracy. Then the current distribution can be broken up into a network of elementary current loops, the typical one of which is an elemental tube of current of cross-sectional area $\Delta\sigma$ following a closed path C and spanned by a surface S with normal $\mathbf{n}$, as shown in Fig. 5.20.

We can express the increment of work done against the induced emf in terms of the change in magnetic induction through the loop:

$$\Delta(\delta W) = J\,\Delta\sigma \int_S \mathbf{n} \cdot \delta\mathbf{B}\, da$$

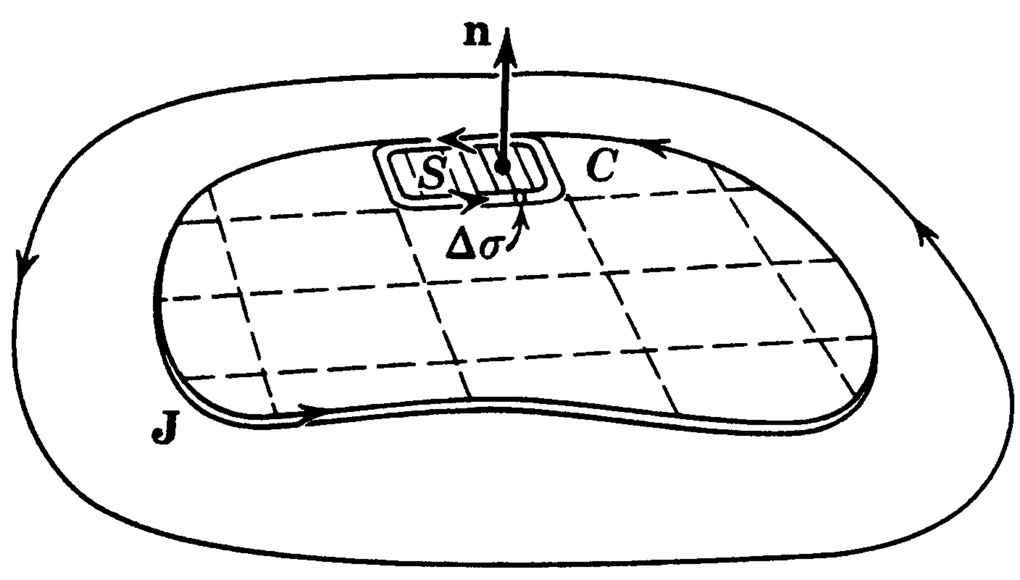

Figure 5.20 Distribution of current density broken up into elemental current loops.

where the extra Δ appears because we are considering only one elemental circuit. If we express $\mathbf{B}$ in terms of the vector potential $\mathbf{A}$, then we have

$$\Delta(\delta W) = J\,\Delta\sigma \int_S (\nabla \times \delta\mathbf{A}) \cdot \mathbf{n}\, da$$

With application of Stokes's theorem this can be written

$$\Delta(\delta W) = J\,\Delta\sigma \oint_C \delta\mathbf{A} \cdot d\mathbf{l}$$

but $J\,\Delta\sigma\, d\mathbf{l}$ is equal to $\mathbf{J}\, d^3x$, by definition, since $d\mathbf{l}$ is parallel to $\mathbf{J}$. Evidently the sum over all such elemental loops will be the volume integral. Hence the total increment of work done by the external sources due to a change $\delta\mathbf{A}(\mathbf{x})$ in the vector potential is

$$\delta W = \int \delta\mathbf{A} \cdot \mathbf{J}\, d^3x \tag{5.144}$$

An expression involving the magnetic fields rather than $\mathbf{J}$ and $\delta\mathbf{A}$ can be obtained by using Ampère's law:

$$\nabla \times \mathbf{H} = \mathbf{J}$$

Then

$$\delta W = \int \delta\mathbf{A} \cdot (\nabla \times \mathbf{H})\, d^3x \tag{5.145}$$

The vector identity,

$$\nabla \cdot (\mathbf{P} \times \mathbf{Q}) = \mathbf{Q} \cdot (\nabla \times \mathbf{P}) - \mathbf{P} \cdot (\nabla \times \mathbf{Q})$$

can be used to transform (5.145):

$$\delta W = \int [\mathbf{H} \cdot (\nabla \times \delta\mathbf{A}) + \nabla \cdot (\mathbf{H} \times \delta\mathbf{A})]\, d^3x \tag{5.146}$$

If the field distribution is assumed to be localized, the second integral vanishes. With the definition of $\mathbf{B}$ in terms of $\mathbf{A}$, the energy increment can be written:

$$\delta W = \int \mathbf{H} \cdot \delta\mathbf{B}\, d^3x \tag{5.147}$$

This relation is the magnetic equivalent of the electrostatic equation (4.86). In its present form it is applicable to all magnetic media, including ferromagnetic substances. If we assume that the medium is para- or diamagnetic, so that a linear relation exists between $\mathbf{H}$ and $\mathbf{B}$, then

$$\mathbf{H} \cdot \delta\mathbf{B} = \tfrac{1}{2}\delta(\mathbf{H} \cdot \mathbf{B})$$

If we now bring the fields up from zero to their final values, the total magnetic energy will be

$$W = \frac{1}{2} \int \mathbf{H} \cdot \mathbf{B}\, d^3x \tag{5.148}$$

This is the magnetic analog of (4.89).

The magnetic equivalent of (4.83) where the electrostatic energy is expressed in terms of charge density and potential, can be obtained from (5.144) by assuming a linear relation between **J** and **A**. Then we find the magnetic energy to be

$$W = \frac{1}{2}\int \mathbf{J}\cdot\mathbf{A}\, d^3x \tag{5.149}$$

The magnetic problem of the change in energy when an object of permeability μ_1 is placed in a magnetic field whose current sources are fixed can be treated in close analogy with the electrostatic discussion of Section 4.7. The role of **E** is taken by **B**, that of **D** by **H**. The original medium has permeability μ_0 and existing magnetic induction $\mathbf{B}_0$. After the object is in place the fields are **B** and **H**. It is left as an exercise for the reader to verify that for fixed sources of the field the change in energy is

$$W = \frac{1}{2}\int_{V_1} (\mathbf{B}\cdot\mathbf{H}_0 - \mathbf{H}\cdot\mathbf{B}_0)\, d^3x$$

where the integration is over the volume of the object. This can be written in the alternative forms:

$$W = \frac{1}{2}\int_{V_1} (\mu_1 - \mu_0)\mathbf{H}\cdot\mathbf{H}_0\, d^3x = \frac{1}{2}\int_{V_1}\left(\frac{1}{\mu_0} - \frac{1}{\mu_1}\right)\mathbf{B}\cdot\mathbf{B}_0\, d^3x$$

Both μ_1 and μ_0 can be functions of position, but they are assumed independent of field strength.

If the object is in otherwise free space, the change in energy can be expressed in terms of the magnetization as

$$W = \frac{1}{2}\int_{V_1} \mathbf{M}\cdot\mathbf{B}_0\, d^3x \tag{5.150}$$

It should be noted that (5.150) is equivalent to the electrostatic result (4.93), except for sign. This sign change arises because the energy W consists of the total energy change occurring when the permeable body is introduced in the field, including the work done by the sources against the induced electromotive forces. In this respect the magnetic problem with fixed currents is analogous to the electrostatic problem with fixed potentials on the surfaces that determine the fields. By an analysis equivalent to that at the end of Section 4.7 we can show that for a small displacement the work done against the induced emf's is twice as large as, and of the opposite sign to, the potential-energy change of the body. Thus, to find the force acting on the body, we consider a generalized displacement ξ and calculate the *positive* derivative of W with respect to the displacement:

$$F_\xi = \left(\frac{\partial W}{\partial \xi}\right)_J \tag{5.151}$$

The subscript J implies fixed source currents.

The difference between (5.150) and the potential energy (5.72) for a permanent magnetic moment in an external field (apart from the factor $\frac{1}{2}$, which is traced to the linear relation assumed between **M** and **B**) comes from the fact that (5.150) is the total energy required to produce the configuration, whereas (5.72)

includes only the work done in establishing the permanent magnetic moment in the field, not the work done in creating the magnetic moment and keeping it permanent.

5.17 *Energy and Self- and Mutual Inductances*

A. *Coefficients of Self- and Mutual Inductance*

Just as the concept of coefficients of capacitance for a system of conductors held at different electrostatic potential is useful (Section 1.11), the concept of self- and mutual inductances are useful for systems of current-carrying circuits. Imagine a system of N distinct current-carrying circuits, the ith one with total current I_i, in otherwise empty space. The circuits are not necessarily thin wires (they can be bus bars, etc.) but are assumed for the present to be nonpermeable. The total energy (5.149) in terms of an integral of $\mathbf{J} \cdot \mathbf{A}/2$ can be expressed as

$$W = \frac{1}{2} \sum_{i=1}^{N} L_i I_i^2 + \sum_{i=1}^{N} \sum_{j>i}^{N} M_{ij} I_i I_j \tag{5.152}$$

where L_i is the self-inductance of the ith circuit and M_{ij} is the mutual inductance between the ith and jth circuits. To establish this result, we first use (5.32) for the vector potential to convert (5.149) to

$$W = \frac{\mu_0}{8\pi} \int d^3x \int d^3x' \, \frac{\mathbf{J}(\mathbf{x}) \cdot \mathbf{J}(\mathbf{x}')}{|\mathbf{x} - \mathbf{x}'|} \tag{5.153}$$

The integrals can now be broken up into sums of separate integrals over each circuit:

$$W = \frac{\mu_0}{8\pi} \sum_{i=1}^{N} \int d^3x_i \sum_{j=1}^{N} \int d^3x'_j \, \frac{\mathbf{J}(\mathbf{x}_i) \cdot \mathbf{J}(\mathbf{x}'_j)}{|\mathbf{x}_i - \mathbf{x}'_j|}$$

In the sums there are terms with $i = j$ and terms with $i \neq j$. The former define the first sum in (5.152), the latter, the second. Evidently, the coefficients L_i and M_{ij} are given by

$$L_i = \frac{\mu_0}{4\pi I_i^2} \int_{C_i} d^3x_i \int_{C_i} d^3x'_i \, \frac{\mathbf{J}(\mathbf{x}_i) \cdot \mathbf{J}(\mathbf{x}'_i)}{|\mathbf{x}_i - \mathbf{x}'_i|} \tag{5.154}$$

and

$$M_{ij} = \frac{\mu_0}{4\pi I_i I_j} \int_{C_i} d^3x_i \int_{C_j} d^3x'_j \, \frac{\mathbf{J}(\mathbf{x}_i) \cdot \mathbf{J}(\mathbf{x}'_j)}{|\mathbf{x}_i - \mathbf{x}'_j|} \tag{5.155}$$

Note that the coefficients of mutual inductance M_{ij} are symmetric in i and j.

These general expressions for self- and mutual inductance are the rigorous versions of the more elementary definitions in terms of flux linkage. To establish the connection, consider the expression for mutual inductance (for which the ambiguities in the definition of flux linkage for self-inductance are absent). The integral over d^3x' times $\mu_0/4\pi$ is just the expression (5.32) for the vector potential $\mathbf{A}(\mathbf{x}_i)$ at position $\mathbf{x}_i$ in the ith circuit caused by the current I_j flowing in the jth circuit. If the ith circuit is imagined to be negligible in cross section compared to

the overall scale of both circuits, we can write the integrand $\mathbf{J}(\mathbf{x}_i)\, d^3x$ for the integration over the volume of the ith circuit as $\mathbf{J}\, d^3x = \mathbf{J}_{\parallel}\, da\, d\mathbf{l}$, where da is a locally defined element of cross-sectional area and $d\mathbf{l}$ is a directed longitudinal differential in the sense of current flow. With the vector potential sensibly constant in the cross-sectional integral at a fixed position along the circuit, the mutual inductance becomes

$$M_{ij} = \frac{1}{I_i I_j} \cdot I_i \oint_{C_i} \mathbf{A}_{ij} \cdot d\mathbf{l} = \frac{1}{I_j} \int_{S_i} (\nabla \times \mathbf{A}_{ij}) \cdot \mathbf{n}\, da$$

where $\mathbf{A}_{ij}$ is the vector potential caused by the jth circuit at the integration point on the ith and the factor I_i comes from the integral over the cross section. Stokes's theorem has been used to obtain the second form. Since the curl of $\mathbf{A}$ is the magnetic induction $\mathbf{B}$, the area integral is just the magnetic-flux linkage (5.133). Thus the mutual inductance is finally

$$M_{ij} = \frac{1}{I_j} F_{ij} \tag{5.156}$$

where F_{ij} is the magnetic flux from circuit j linked within circuit i. For self-inductance, the physical argument is the same, but the ambiguity in the meaning of the self-flux linkage F_{ii} requires a return to the rigorous expression (5.154) based on the magnetic energy.

For both mutual and self-inductance the energy definitions are fundamental. If either the conductors carrying the current are permeable or the medium between the conductors is ($\mu \neq \mu_0$), (5.152) is valid, but (5.153) is not. It is then best to use the expression (5.148) for the magnetic energy in terms of the fields on the left-hand side of (5.152) in computation of the coefficients of induction.

The presence of terms such as $L\, dI/dt$ or $M_{12}\, dI_2/dt$ in the voltage balance in lumped circuit equations follows immediately from relating the time derivative of the linked flux (dF/dt) to the induced emf $\mathscr{E}$ through (5.135).

B. Estimation of Self-Inductance for Simple Circuits

The self-inductance of simple current-carrying elements can be estimated by consideration of the magnetic energy. Suppose a circular wire of cross-sectional radius a carrying a steady current I forms a loop of circumference C and "area" A (the quotation marks remind us that, since the loop may not be planar, A may stand for a projected area). We imagine that the loop, though relatively arbitrary in shape, does not have kinks in it with radii of curvature as small as the wire size. An example is sketched in Fig. 5.21. There are three length scales here—the wire radius, the dimensions of the loop, represented by $C/2\pi$ or $A^{1/2}$, and the outside region, $r \gg C/2\pi$. From (5.152), the relation between the self-inductance and the magnetic energy, we find that

$$L = \frac{1}{I^2} \int \frac{\mathbf{B} \cdot \mathbf{B}}{\mu}\, d^3x \tag{5.157}$$

Estimation of the magnetic induction will lead to an estimate of the inductance. On the length scale of the wire radius, we may ignore the curvature and consider

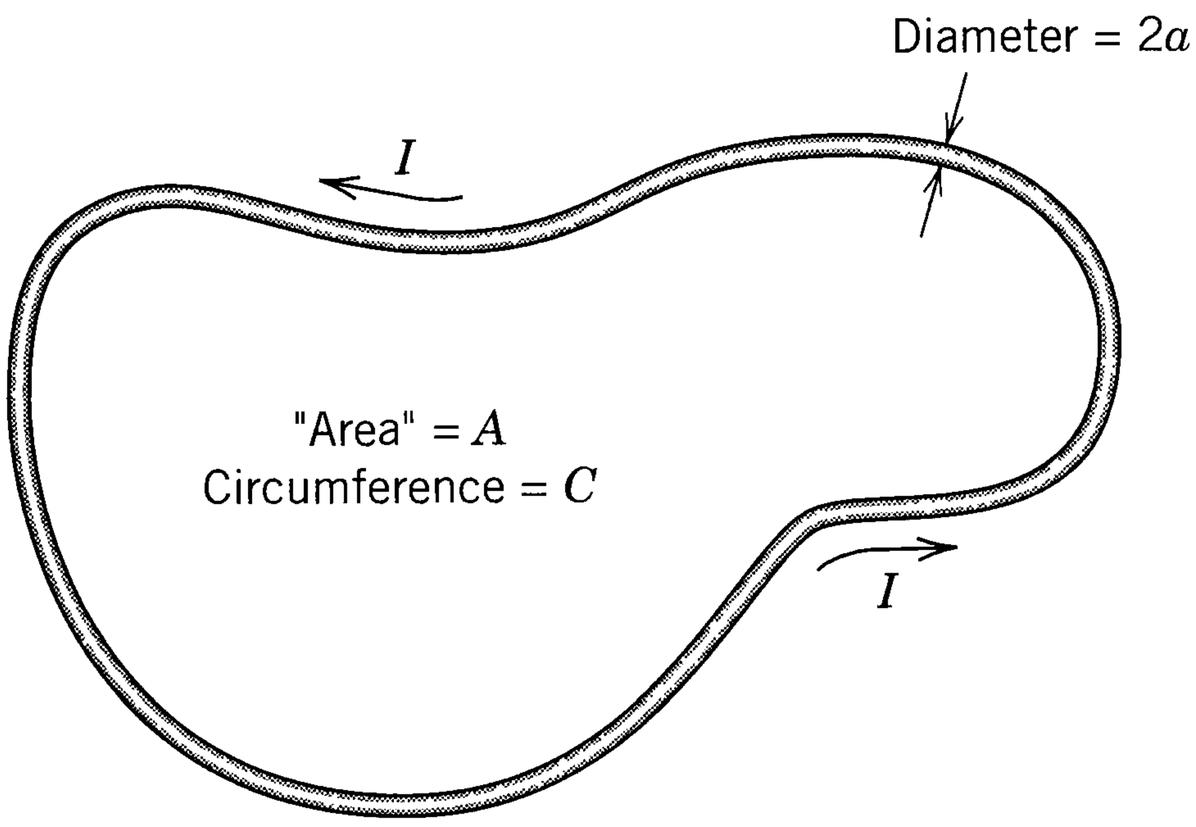

Figure 5.21 Closed current-carrying circuit made of a wire of radius a, length C, and (projected) area A.

the field inside and outside the wire as if it were straight and infinitely long. If the current density is uniform throughout the interior, from symmetry and Ampère's law (5.25) the magnetic induction is azimuthal and equal to

$$B_\phi = \frac{\mu_0 I}{2\pi a}\frac{\rho_<}{\rho_>}$$

where $\rho_<$ ($\rho_>$) is the smaller (larger) of a and ρ. We have assumed that the wire and the medium surrounding it are nonpermeable. The contributions to the inductance per unit length from inside the wire and outside the wire, out to a radius $\rho_{\max}$, are

$$\frac{dL_{\text{in}}}{dl} = \frac{\mu_0}{8\pi}; \qquad \frac{dL_{\text{out}}(\rho_{\max})}{dl} = \frac{\mu_0}{4\pi}\ln\left(\frac{\rho_{\max}^2}{a^2}\right)$$

The radial integral outside the wire is limited to $\rho < \rho_{\max}$ because the expression for B_ϕ fails to represent the magnetic induction at distances of the order of the middle length scale. If we look to the interior of the loop, it is clear that for $\rho = O(C/2\pi) = O(A^{1/2})$ the isolated straight wire is a very poor representation of the current pattern. Thus we expect* $\rho_{\max} = O(A^{1/2})$. There is, of course, a contribution to the inductance from the outside region at distances beyond $\rho_{\max}$. There, at distances large compared to $A^{1/2}$, the slow falloff of the magnetic induction as $1/\rho$ is replaced by a dipole field pattern with $|\mathbf{B}| = O(\mu_0 m/4\pi r^3)$, where $m = O(IA)$ is the magnetic moment of the loop of wire. Because of the rapid decrease of the field beyond $\rho_{\max}$, the contribution per unit length to the inductance from large distances (i.e., $\rho \gtrsim A^{1/2}$) can be estimated to be

$$\frac{dL_{\text{dipole}}}{dl} = O\left(\frac{4\pi}{\mu_0 I^2 C}\int_{\rho_{\max}}^{\infty} r^2(\mu_0 IA/4\pi r^3)^2\,dr\right) = O(\mu_0 A^2/4\pi\rho_{\max}^3 C)$$

If we set $\rho_{\max} = (\xi' A)^{1/2}$, where ξ' is a number of order unity (containing our ignorance),

$$\frac{dL_{\text{dipole}}}{dl} = O(\mu_0 A^{1/2}/4\pi C)$$

*If the circuit shape is such that $A \ll C^2$, as for an elongated loop, a different estimate of $\rho_{\max}$ may be appropriate [e.g., $\rho_{\max} = O(A/C)$].

a contribution of order unity compared to the logarithm above. Upon combining the different contributions, the inductance of the loop is estimated to be

$$L \approx \frac{\mu_0}{4\pi} C\left[\ln\left(\frac{\xi A}{a^2}\right) + \frac{1}{2}\right] \tag{5.158}$$

Here we have exhibited the interior contribution explicitly and indicated the uncertainty in the proper value of $\rho_{\max}$ and the size of the exterior contribution through the number ξ, of order unity.

Four comments: First, if the wire has a magnetic permeability μ, the interior contribution becomes $\frac{1}{2} \to \mu/2\mu_0$. Second, for a thin wire bent in a circle of radius large compared to the wire radius, a precise calculation (see Problem 5.32) shows that $\xi = 64/\pi e^4 \approx 0.373$. Third, at frequencies high enough to ensure that the skin depth of the wire is small compared to its radius, the interior contribution is absent because the current is confined to near the surface of the wire (see next section). Fourth, if the single turn of wire is replaced by a tight coil of N turns, with the effective cross-sectional radius of the bundle being a, the self-inductance is N^2 times the expression above.

Exercise

Consider a circuit made up of two long, parallel, nonpermeable, circular wires of radii a_1 and a_2, separated by a distance d large compared to the largest radius. Current flows up one wire and back along the other. Ignore the ends. Use the method above to show that the self-inductance per unit length is approximately

$$\frac{dL}{dl} \approx \frac{\mu_0}{\pi}\left[\ln\left(\frac{\xi d}{\sqrt{a_1 a_2}}\right) + \frac{1}{4}\right]$$

where ξ is of order unity. Can you find a reliable value of ξ, within the approximations stated?

5.18 Quasi-Static Magnetic Fields in Conductors; Eddy Currents; Magnetic Diffusion

The magnetostatics of the first 14 sections of this chapter are based on Ampère's law and the absence of magnetic charges. As we saw in Section 5.15, if the magnetic induction varies in time, an electric field is created, according to Faraday's law; the situation is no longer purely magnetic in character. Nevertheless, if the time variation is not too rapid, the magnetic fields dominate and the behavior can be called quasi-static. "Quasi-static" refers to the regime for which the finite speed of light can be neglected and fields treated as if they propagated instantaneously. Said in other, equivalent words, it is the regime where the system is small compared with the electromagnetic wavelength associated with the dominant time scale of the problem. As we learn in subsequent chapters, such a regime permits neglect of the contribution of the Maxwell displacement current to Ampère's law. We consider such fields in conducting media, where Ohm's law

relates the electric field to the current density and so back to the magnetic field via the Ampère equation. The relevant equations are

$$\nabla \times \mathbf{H} = \mathbf{J}, \qquad \nabla \cdot \mathbf{B} = 0, \qquad \nabla \times \mathbf{E} + \frac{\partial \mathbf{B}}{\partial t} = 0, \qquad \mathbf{J} = \sigma \mathbf{E} \tag{5.159}$$

With $\mathbf{B} = \nabla \times \mathbf{A}$, Faraday's law shows that the curl of $\mathbf{E} + \partial \mathbf{A}/\partial t$ vanishes. As a result, we can write $\mathbf{E} = -\partial \mathbf{A}/\partial t - \nabla \Phi$. With the assumption of negligible free charge and the time-varying $\mathbf{B}$ as the sole source of the electric field, we may set the scalar potential $\Phi = 0$ and have $\mathbf{E} = -\partial \mathbf{A}/\partial t$. Note that we have the subsidiary conditions, $\nabla \cdot \mathbf{E} = 0$ and $\nabla \cdot \mathbf{A} = 0$. For media of uniform, frequency-independent permeability μ, Ampère's law can be written $\nabla \times \mathbf{B} = \mu \mathbf{J} = \mu\sigma \mathbf{E}$. Elimination of $\mathbf{B}$ and $\mathbf{E}$ in favor of $\mathbf{A}$ and use of the vector identity, $\nabla \times \nabla \times \mathbf{A} = \nabla(\nabla \cdot \mathbf{A}) - \nabla^2 \mathbf{A}$, yields the *diffusion equation* for the vector potential,

$$\nabla^2 \mathbf{A} = \mu\sigma \frac{\partial \mathbf{A}}{\partial t} \tag{5.160}$$

This equation, which obviously also holds for the electric field $\mathbf{E}$, is valid for spatially varying, but frequency-independent σ. If the conductivity is constant in space, it follows that the magnetic induction $\mathbf{B}$ and the current density $\mathbf{J}$ also satisfy the same diffusion equation.

The structure of (5.160) allows us to estimate the time τ for decay of an initial configuration of fields with typical spatial variation defined by the length L. We put $\nabla^2 \mathbf{A} = O(\mathbf{A}/L^2)$ and $\partial \mathbf{A}/\partial t = O(\mathbf{A}/\tau)$. Then

$$\tau = O(\mu\sigma L^2) \tag{5.161}$$

Alternatively, (5.161) can be used to estimate the distance L over which fields exist in a conductor subjected externally to fields with harmonic variation at frequency $\nu = 1/\tau$,

$$L = O\left(\frac{1}{\sqrt{\mu\sigma\nu}}\right) \tag{5.162}$$

For a copper sphere of radius 1 cm, the decay time of some initial $\mathbf{B}$ field inside is of the order of 5–10 milliseconds; for the molten iron core of the earth it is of the order of 10^5 years. This last number is consistent with paleomagnetic data—the last polarity reversal of the earth's field occurred about 10^6 years ago; there is some evidence for a decline to near zero about 5×10^4 years ago and a rise back to its present value.

A. *Skin Depth, Eddy Currents, Induction Heating*

A simple quantitative illustration of the fields described by (5.160) is afforded by the situation shown in Fig. 5.22: A semi-infinite conductor of uniform conductivity σ and permeability μ occupies the space $z > 0$, with empty space for $z < 0$. The surface at $z = 0^-$ is subjected to a spatially constant, but time-varying, magnetic field in the x direction, $H_x(t) = H_0 \cos \omega t$. We seek a steady-state solution of (5.160) for $z > 0$, subject to appropriate boundary conditions at $z = 0$ and finiteness at $z \to +\infty$. Continuity of the tangential component of $\mathbf{H}$ and the

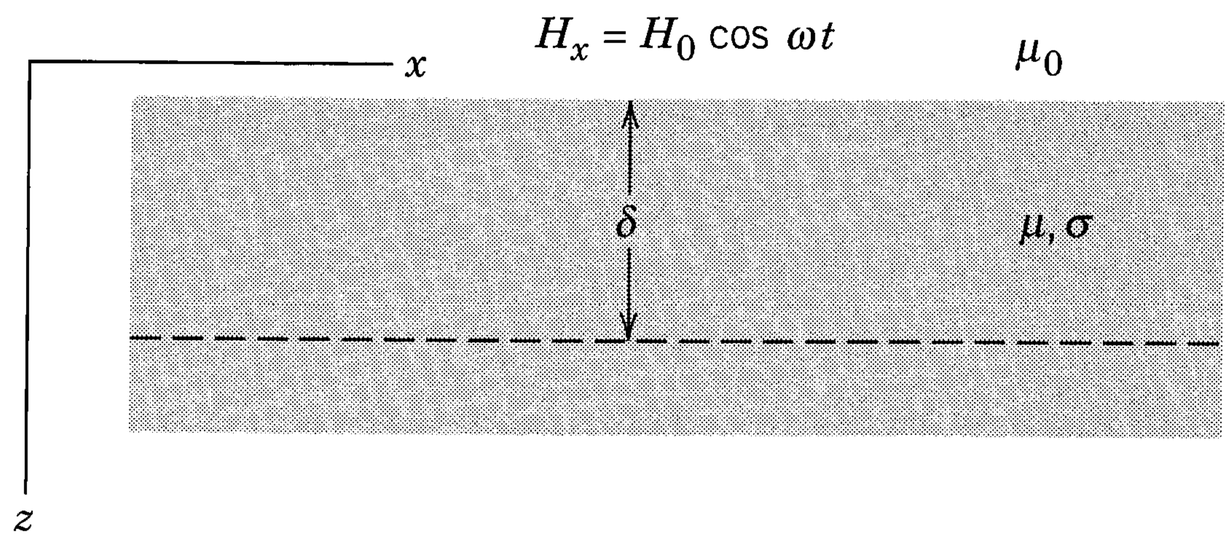

Figure 5.22 At the surface of a semi-infinite conducting permeable medium, a spatially constant magnetic field, $H_x(t) = H_0 \cos \omega t$, is applied parallel to the surface at $z = 0^-$. A localized magnetic field and current flow exists within the medium in the region $z < O(\delta)$.

normal component of **B** across $z = 0$ requires that at $z = 0^+$, the magnetic field have only an x component, $H_x(t) = H_0 \cos \omega t$. The linearity of (5.160) implies that there is only an x component throughout the half-space, $z > 0$ and it is a function of z and t, $H_x(z, t)$.

Because the diffusion equation is second order in the spatial derivatives and first order in the time, it is convenient to use complex notation, with the understanding that the physical fields are found by taking the real parts of the solutions. Thus, the boundary value on H_x is $H_x = H_0 e^{-i\omega t}$, where taking the real part is understood. The steady-state solution for $H_x(z, t)$ can be written

$$H_x(z, t) = h(z)e^{-i\omega t}$$

where, from (5.160), $h(z)$ satisfies

$$\left(\frac{d^2}{dz^2} + i\mu\sigma\omega\right)h(z) = 0 \tag{5.163}$$

A trial solution of the form, $h(z) = e^{ikz}$ leads to the condition

$$k^2 = i\mu\sigma\omega \qquad \text{or} \qquad k = \pm(1 + i)\sqrt{\frac{\mu\sigma\omega}{2}} \tag{5.164}$$

The square root has the dimensions of an inverse length characteristic of the medium and the frequency [see (5.162)]. The length is called the *skin depth* δ:

$$\delta = \sqrt{\frac{2}{\mu\sigma\omega}} \tag{5.165}$$

For copper at room temperature ($\sigma^{-1} = 1.68 \times 10^{-8}\ \Omega \cdot \text{m}$), $\delta = 6.52 \times 10^{-2}/\sqrt{\nu(\text{Hz})}$ m, where $\nu = \omega/2\pi$. For seawater, $\delta \approx 240/\sqrt{\nu(\text{Hz})}$ m (see Fig. 7.9 and accompanying text).

The solution for H_x is the real part of

$$H_x(z, t) = Ae^{-z/\delta}e^{i(z/\delta - \omega t)} + Be^{z/\delta}e^{-i(z/\delta + \omega t)}$$

with A and B complex numbers. We must choose $B = 0$ to avoid exponentially large fields as $z \to \infty$. Comparison of the solution to the boundary value, $H_x(0^+, t) = H_0 e^{-i\omega t}$, shows that $A = H_0$ and the solution for $z > 0$ is

$$H_x(z, t) = H_0 e^{-z/\delta} \cos(z/\delta - \omega t) \tag{5.166}$$

The magnetic field falls off exponentially in z, with a spatial oscillation of the same scale, being confined mainly to a depth less than the skin depth δ.

Since the field varies in time, there is an accompanying small electric field. From Ampère's and Ohm's laws, together with the existence of only $H_x(z, t)$, we find that there is only a y component of $\mathbf{E}$, given by

$$E_y = \frac{1}{\sigma}\frac{dH_x}{dz} = \frac{-1 + i}{\sigma\delta} H_0 e^{-z/\delta} e^{iz/\delta - i\omega t}$$

Taking the real part and writing $1/\sigma\delta = \mu\delta\omega/2$, we have

$$E_y = \frac{\mu\omega\delta}{\sqrt{2}} H_0 e^{-z/\delta} \cos(z/\delta - \omega t + 3\pi/4) \tag{5.167}$$

To compare the magnitude of the electric field and the magnetic induction, we form the dimensionless ratio,

$$E_y/c\mu H_x = O(\omega\delta/c) \ll 1$$

by the quasi-static assumption. The fields are predominantly magnetic, with a small tangential electric field. The field is associated with a localized current density (for $z > 0$),

$$J_y = \sigma E_y = \frac{\sqrt{2}}{\delta} H_0 e^{-z/\delta} \cos(z/\delta - \omega t + 3\pi/4) \tag{5.168}$$

whose integral in z is an effective surface current,

$$K_y(t) \equiv \int_0^\infty J_y(z, t)\, dz = -H_0 \cos \omega t$$

For very small skin depth, the volume current flow in the region within $O(\delta)$ of the surface acts as a surface current whose magnitude and direction is such as to reduce the magnetic field to zero for $z \gg \delta$. See Section 8.1 for more discussion relevant to waveguides and cavities.

There is resistive heating in the conductor. The time-averaged power input per unit volume is $P_{\text{resistive}} = \langle \mathbf{J} \cdot \mathbf{E} \rangle$ (recall $P = IV = V^2/R$ in a simple lumped resistor circuit). With (5.167) and (5.168), we find

$$P_{\text{resistive}} = \frac{1}{2} \mu\omega H_0^2 e^{-2z/\delta} \tag{5.169}$$

The heating of the conducting medium to a depth of the order of the skin depth is the basis of induction furnaces in steel mills and of microwave cookers in kitchens (where the conductivity of water, or more correctly, the dissipative part of its dielectric susceptibility, causes the losses—see Fig. 7.9). References to more elaborate treatments of eddy currents and induction heating are found at the end of the chapter.

B. Diffusion of Magnetic Fields in Conducting Media

Diffusion of magnetic fields in conducting media can be illustrated with the simple example of two infinite uniform current sheets, parallel to each other and located a distance $2a$ apart, at $z = -a$ and $z = +a$, within an infinite conducting medium of permeability μ and conductivity σ. The currents are such that in the

region, $0 < |z| < a$, there is a constant magnetic field H_0 in the x direction and zero field outside. Explicitly, the current density $\mathbf{J}$ is in the y direction, and

$$J_y = H_0[\delta(z + a) - \delta(z - a)]$$

At time $t = 0$, the current is suddenly turned off. The vector potential and magnetic field decay according to (5.160), with variation only in z and t. We use a Laplace transform technique: Separate the space and time dependences by writing

$$H_x(z, t) = \int_0^\infty e^{-pt}\bar{h}(p, z)\, dp$$

Substitution into the diffusion equation (5.160) for H_x leads to the wave equation, $(d^2/dz^2 + k^2)\bar{h}(p, z) = 0$, where $k^2 = \mu\sigma p$. Since the situation is symmetric about $z = 0$, the appropriate solution is $\bar{h} \propto \cos(kz)$. With a change of variable from p to k in the transform integral, $H_x(z, t)$ becomes

$$H_x(z, t) = \int_0^\infty e^{-k^2 t/\mu\sigma} h(k) \cos(kz)\, dk \tag{5.170}$$

The coefficient function $h(k)$ is determined by the initial conditions. At $t = 0^+$, the magnetic field is

$$H_x(z, 0^+) = \int_0^\infty h(k) \cos(kz)\, dk = H_0[\Theta(z + a) - \Theta(z - a)] \tag{5.171}$$

where $\Theta(x)$ is the unit step function, $\Theta(x) = 0$ for $x < 0$ and $\Theta(x) = 1$ for $x > 0$. Exploiting the symmetry in z, we can express the cosine in terms of exponentials and write

$$\frac{1}{2}\int_{-\infty}^\infty h(k) e^{ikz}\, dk = H_0[\Theta(z + a) - \Theta(z - a)] \tag{5.172}$$

where $h(-k) = h(k)$. Inversion of the Fourier integral yields $h(k)$,

$$h(k) = \frac{H_0}{\pi}\int_{-a}^a e^{-ikz}\, dz = \frac{2H_0}{\pi k}\sin(ka) \tag{5.173}$$

The solution for the magnetic field at all times, $t > 0$, is therefore

$$H_x(z, t) = \frac{2H_0}{\pi}\int_0^\infty e^{-\nu t\kappa^2}\frac{\sin\kappa}{\kappa}\cos\left[\left(\frac{z}{a}\right)\kappa\right] d\kappa \tag{5.174}$$

where $\nu = (\mu\sigma a^2)^{-1}$ is a characteristic decay rate [see (5.161)]. The integral in (5.174) can be expressed as the sum of two terms, each identified with a representation of the error function,

$$\Phi(\xi) \equiv \frac{2}{\sqrt{\pi}}\int_0^\xi e^{-x^2}\, dx = \frac{2}{\pi}\int_0^\infty e^{-x^2/4\xi^2}\frac{\sin x}{x}\, dx \tag{5.175}$$

The result is

$$H_x(z, t) = \frac{H_0}{2}\left[\Phi\left(\frac{1 + |z|/a}{2\sqrt{\nu t}}\right) + \Phi\left(\frac{1 - |z|/a}{2\sqrt{\nu t}}\right)\right] \tag{5.176}$$

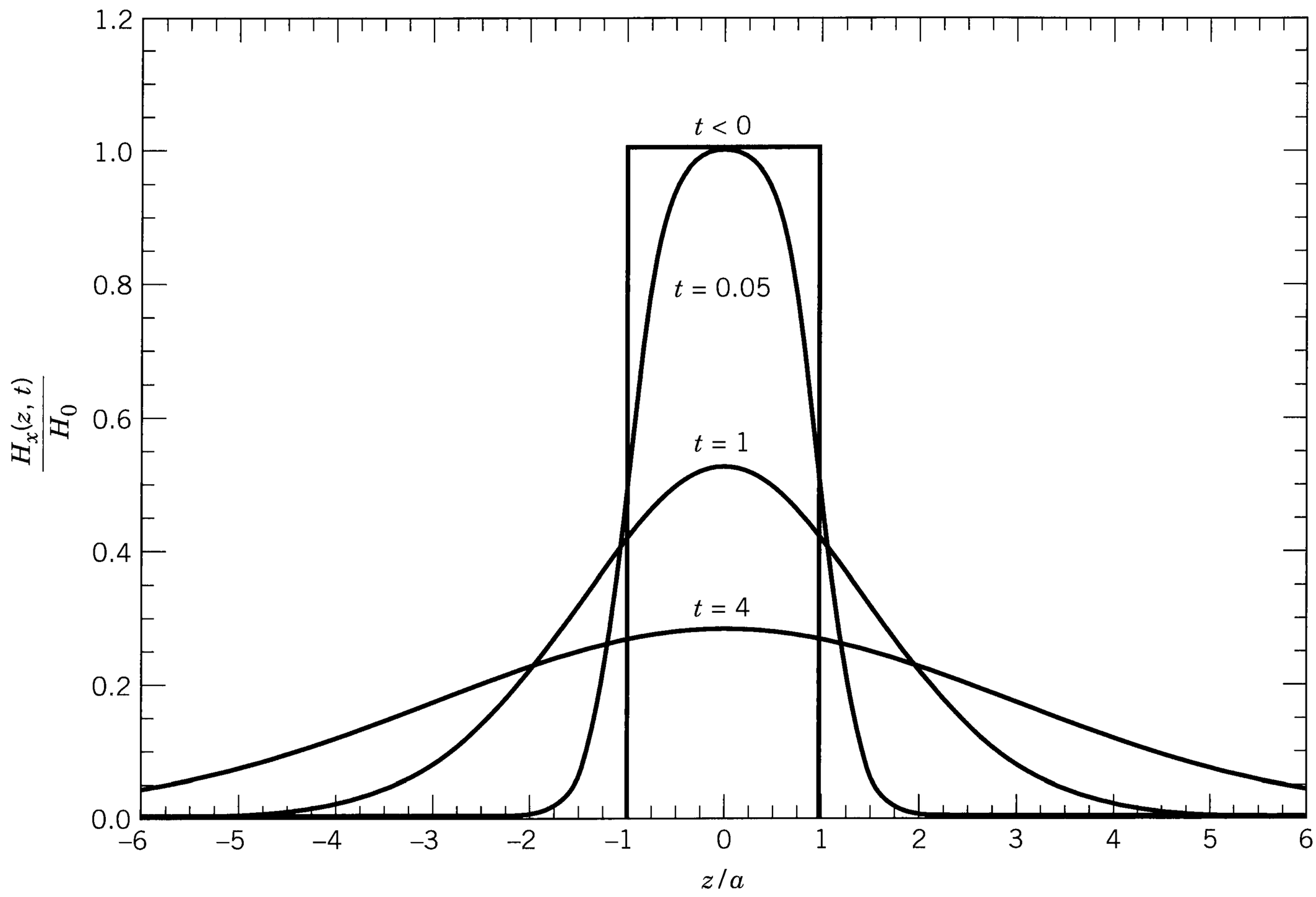

Figure 5.23 Magnetic field distributions given by (5.172) for $\nu t < 0$, and (5.176) for $\nu t = 0.05, 1, 4$ as a function of z/a. The outward diffusion with time for $t > 0$ is manifest; the rise and fall of the field in time at a fixed position can be noted for $1 < |z|/a < 2$.

To understand qualitatively the meaning of the solution we note first that $\Phi(-\xi) = -\Phi(\xi)$, second that $\Phi(\xi) \to 1 - (1/\sqrt{\pi})[1 - 1/2\xi^2 + \cdots]\exp(-\xi^2)$ for $\xi \to \infty$, and third that $\Phi(\xi) \approx (2\xi/\sqrt{\pi})(1 - \xi^2/3 + \cdots)$ for $|\xi| \ll 1$. For $\nu t \to 0$, the arguments in (5.176) are large in magnitude; the solution obviously reduces to the right-hand side of (5.172), as required. For long times ($|\xi| \ll 1$), $H_x(z, t) \to H_0/\sqrt{\pi\nu t}$, independent of $|z|/a$ to leading order in an expansion in $1/\sqrt{\nu t}$. This result is misleading, however, because the coefficients of the higher terms in $1/\nu t$ are z-dependent. A more revealing result is obtained by expanding the error functions in Taylor series in $1/2\sqrt{\nu t}$ to the third order. The result is

$$H_x(z, t) \approx \frac{H_0}{\sqrt{\pi\nu t}} e^{-|z|^2/4\nu t a^2}\left[1 + \frac{1}{12\nu t}(|z|^2/2\nu t a^2 - 1) + \cdots\right] \tag{5.177}$$

Note that the approximate expression vanishes as $\nu t \to 0$, as it should for any $|z| > a$, and goes to $H_x \approx H_0/\sqrt{\pi\nu t}$ for $\nu t \gg |z|/2a$. For $|z|/a < 5$, it is within a few percent for any $\nu t > 1$. At a given position, the field as a function of time has a maximum at $\nu t \approx |z|^2/2a^2$ [exact for the approximation (5.177)], followed by the very slow decrease as $t^{-1/2}$. Figure 5.23 shows the spatial distributions of the magnetic field at different fixed times.

References and Suggested Reading

Problems of steady-state current flow in an extended resistive medium are analogous to electrostatic potential problems, with the current density replacing the displacement

and the conductivity replacing the dielectric constant. But the boundary conditions are generally different. Steady-state current flow is treated in

Jeans, Chapters IX and X
Smythe, Chapter VI

Magnetic fields due to specified current distributions and boundary-value problems in magnetostatics are discussed, with numerous examples, by

Durand, Chapters XIV and XV
Smythe, Chapters VII and XII

The atomic theory of magnetic properties rightly falls in the domain of quantum mechanics. Semiclassical discussions are given by

Abraham and Becker, Band II, Sections 29–34
Durand, pp. 551–573, and Chapter XVII
Landau and Lifshitz, *Electrodynamics of Continuous Media*
Rosenfeld, Chapter IV

More detailed treatments of the subject, including crystallographic aspects and the topic of ferromagnetic domains, can be found in

Chakravarty
Craik
Kittel
Ziman, Chapter 10

An encyclopedic reference to the magnetic properties of alloys and other practical information as well as the theory is

R. M. Bozorth, *Ferromagnetism*, Van Nostrand, New York (1978).

Numerical methods in magnetism are discussed in

Ida and Bastos
Zhou

and in the other references cited in the References and Suggested Reading at the end of Chapter 2.

Faraday's law of induction is somewhat tricky to apply to moving circuits such as Faraday discs or homopolar generators. There are numerous discussions of these questions. A sampling from one journal comprises:

D. R. Corson, *Am. J. Phys.* **24**, 126 (1956)
D. L. Webster, *Am. J. Phys.* **31**, 590 (1963)
E. M. Pugh, *Am. J. Phys.* **32**, 879 (1964)
P. J. Scanlon, R. N. Hendriksen, and J. R. Allen, *Am. J. Phys.* **37**, 698 (1969)
R. D. Eagleton, *Am. J. Phys.* **55**, 621 (1987)

A good treatment of the energy of quasi-stationary currents and forces acting on current-carrying circuits, different from ours, is given by

Panofsky and Phillips, Chapter 10
Stratton, Chapter II

Inductance calculations and forces are handled lucidly by

Abraham and Becker, Band I, Chapters VIII and IX

and in many engineering texts.

The near-neglected topic of eddy currents and induction heating is discussed with many examples in

Smythe, Chapter XX

Magnetic fields in conducting fluids or plasmas play a central role in astrophysics, from the dynamos in the interior of planets to the galaxies. Two references are

E. N. Parker, *Cosmical Magnetic Fields*, Oxford University Press, Oxford (1979).
Ya. B. Zel'dovich, A. A. Ruzmaikin, and D. D. Sokoloff, *Magnetic Fields in Astrophysics*, Gordon & Breach, New York (1983).

Problems

5.1 Starting with the differential expression

$$d\mathbf{B} = \frac{\mu_0 I}{4\pi}\, d\mathbf{l}' \times \frac{\mathbf{x} - \mathbf{x}'}{|\mathbf{x} - \mathbf{x}'|^3}$$

for the magnetic induction at the point P with coordinate $\mathbf{x}$ produced by an increment of current $I\, d\mathbf{l}'$ at $\mathbf{x}'$, show explicitly that for a closed loop carrying a current I the magnetic induction at P is

$$\mathbf{B} = \frac{\mu_0 I}{4\pi} \nabla\Omega$$

where Ω is the solid angle subtended by the loop at the point P. This corresponds to a magnetic scalar potential, $\Phi_M = -\mu_0 I\Omega/4\pi$. The sign convention for the solid angle is that Ω is positive if the point P views the "inner" side of the surface spanning the loop, that is, if a unit normal $\mathbf{n}$ to the surface is defined by the direction of current flow via the right-hand rule, Ω is positive if $\mathbf{n}$ points *away* from the point P, and negative otherwise. This is the same convention as in Section 1.6 for the electric dipole layer.

5.2 A long, right cylindrical, ideal solenoid of arbitrary cross section is created by stacking a large number of identical current-carrying loops one above the other, with N coils per unit length and each loop carrying a current I. [In practice such a solenoid could be wound on a mandrel machined to the arbitrary cross section. After the coil was made rigid (e.g., with epoxy), the mandrel would be withdrawn.]

(a) In the approximation that the solenoidal coil is an ideal current sheet and infinitely long, use Problem 5.1 to establish that at any point inside the coil the magnetic field is axial and equal to

$$H = NI$$

and that $H = 0$ for any point outside the coil.

(b) For a realistic solenoid of circular cross section of radius a ($Na \gg 1$), but still infinite in length, show that the "smoothed" magnetic field just outside the solenoid (averaged axially over several turns) is not zero, but is the same in magnitude and direction as that of a single wire on the axis carrying a current I, even if $Na \to \infty$. Compare fields inside and out.

5.3 A right-circular solenoid of finite length L and radius a has N turns per unit length and carries a current I. Show that the magnetic induction on the cylinder axis in the limit $NL \to \infty$ is

$$B_z = \frac{\mu_0 NI}{2}(\cos\theta_1 + \cos\theta_2)$$

where the angles are defined in the figure.

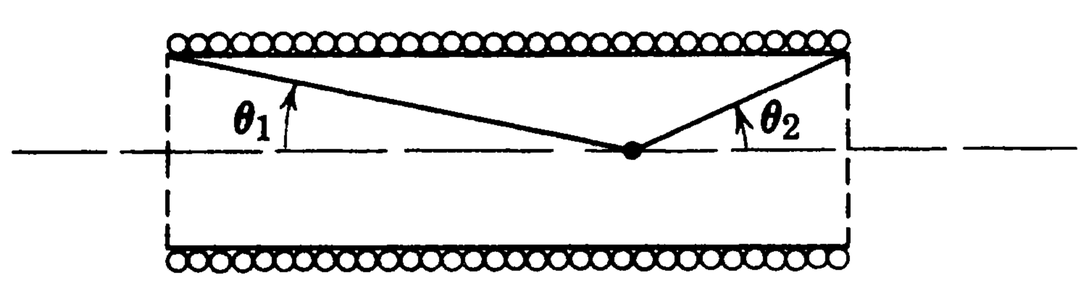

Problem 5.3

5.4 A magnetic induction $\mathbf{B}$ in a current-free region in a uniform medium is cylindrically symmetric with components $B_z(\rho, z)$ and $B_\rho(\rho, z)$ and with a known $B_z(0, z)$ on the axis of symmetry. The magnitude of the axial field varies slowly in z.

(a) Show that near the axis the axial and radial components of magnetic induction are approximately

$$B_z(\rho, z) \approx B_z(0, z) - \left(\frac{\rho^2}{4}\right)\left[\frac{\partial^2 B_z(0, z)}{\partial z^2}\right] + \cdots$$

$$B_\rho(\rho, z) \approx -\left(\frac{\rho}{2}\right)\left[\frac{\partial B_z(0, z)}{\partial z}\right] + \left(\frac{\rho^3}{16}\right)\left[\frac{\partial^3 B_z(0, z)}{\partial z^3}\right] + \cdots$$

(b) What are the magnitudes of the neglected terms, or equivalently what is the criterion defining "near" the axis?

5.5 **(a)** Use the results of Problems 5.4 and 5.3 to find the axial and radial components of magnetic induction in the *central region* ($|z| \ll L/2$) of a long uniform solenoid of radius a and ends at $z = \pm L/2$, including the value of B_z just inside the coil ($\rho = a^-$).

(b) Use Ampère's law to show that the longitudinal magnetic induction just outside the coil is approximately

$$B_z(\rho = a^+, z) \approx -\left(\frac{2\mu_0 N I a^2}{L^2}\right)\left(1 + \frac{12z^2}{L^2} - \frac{9a^2}{L^2} + \cdots\right)$$

For $L \gg a$, the field outside is negligible compared to inside. How does this axial component compare in size to the azimuthal component of Problem 5.2b?

(c) Show that at the end of the solenoid the magnetic induction near the axis has components

$$B_z \simeq \frac{\mu_0 N I}{2}, \qquad B_\rho \simeq \pm\frac{\mu_0 N I}{4}\left(\frac{\rho}{a}\right)$$

5.6 A cylindrical conductor of radius a has a hole of radius b bored parallel to, and centered a distance d from, the cylinder axis ($d + b < a$). The current density is uniform throughout the remaining metal of the cylinder and is parallel to the axis. Use Ampère's law and principle of linear superposition to find the magnitude and the direction of the magnetic-flux density in the hole.

5.7 A compact circular coil of radius a, carrying a current I (perhaps N turns, each with current I/N), lies in the x-y plane with its center at the origin.

(a) By elementary means [Eq. (5.4)] find the magnetic induction at any point on the z axis.

(b) An identical coil with the same magnitude and sense of the current is located on the same axis, parallel to, and a distance b above, the first coil. With the coordinate origin relocated at the point midway between the centers of the two coils, determine the magnetic induction on the axis near the origin as an expansion in powers of z, up to z^4 inclusive:

$$B_z = \left(\frac{\mu_0 I a^2}{d^3}\right)\left[1 + \frac{3(b^2 - a^2)z^2}{2d^4} + \frac{15(b^4 - 6b^2a^2 + 2a^4)z^4}{16d^8} + \cdots\right]$$

where $d^2 = a^2 + b^2/4$.

(c) Show that, off-axis near the origin, the axial and radial components, correct to second order in the coordinates, take the form

$$B_z = \sigma_0 + \sigma_2\left(z^2 - \frac{\rho^2}{2}\right); \qquad B_\rho = -\sigma_2 z\rho$$

(d) For the two coils in part b show that the magnetic induction on the z axis for large $|z|$ is given by the expansion in inverse odd powers of $|z|$ obtained from the small z expansion of part b by the formal substitution, $d \to |z|$.

(e) If $b = a$, the two coils are known as a pair of Helmholtz coils. For this choice of geometry the second terms in the expansions of parts b and d are absent ($\sigma_2 = 0$ in part c). The field near the origin is then very uniform. What is the maximum permitted value of $|z|/a$ if the axial field is to be uniform to one part in 10^4, one part in 10^2?

5.8 A localized cylindrically symmetric current distribution is such that the current flows only in the azimuthal direction; the current density is a function only of r and θ (or ρ and z): $\mathbf{J} = \hat{\boldsymbol{\phi}} J(r, \theta)$. The distribution is "hollow" in the sense that there is a current-free region near the origin, as well as outside.

(a) Show that the magnetic field can be derived from the azimuthal component of the vector potential, with a multipole expansion

$$A_\phi(r, \theta) = -\frac{\mu_0}{4\pi} \sum_L m_L r^L P_L^1(\cos\theta)$$

in the interior and

$$A_\phi(r, \theta) = -\frac{\mu_0}{4\pi} \sum_L \mu_L r^{-L-1} P_L^1(\cos\theta)$$

outside the current distribution.

(b) Show that the internal and external multipole moments are

$$m_L = -\frac{1}{L(L+1)} \int d^3x\, r^{-L-1} P_L^1(\cos\theta)\, J(r, \theta)$$

and

$$\mu_L = -\frac{1}{L(L+1)} \int d^3x\, r^L P_L^1(\cos\theta)\, J(r, \theta)$$

5.9 The two circular coils of radius a and separation b of Problem 5.7 can be described in cylindrical coordinates by the current density

$$\mathbf{J} = \hat{\boldsymbol{\phi}} I \delta(\rho - a)[\delta(z - b/2) + \delta(z + b/2)]$$

(a) Using the formalism of Problem 5.8, calculate the internal and external multipole moments for $L = 1, \ldots, 5$.

(b) Using the internal multipole expansion of Problem 5.8, write down explicitly an expression for B_z on the z axis and relate it to the answer of Problem 5.7b.

5.10 A circular current loop of radius a carrying a current I lies in the x-y plane with its center at the origin.

(a) Show that the only nonvanishing component of the vector potential is

$$A_\phi(\rho, z) = \frac{\mu_0 I a}{\pi} \int_0^\infty dk \cos kz I_1(k\rho_<) K_1(k\rho_>)$$

where $\rho_<$ ($\rho_>$) is the smaller (larger) of a and ρ.

(b) Show that an alternative expression for A_ϕ is

$$A_\phi(\rho, z) = \frac{\mu_0 I a}{2} \int_0^\infty dk\, e^{-k|z|} J_1(ka) J_1(k\rho)$$

(c) Write down integral expressions for the components of magnetic induction, using the expressions of parts a and b. Evaluate explicitly the components of **B** on the z axis by performing the necessary integrations.

5.11 A circular loop of wire carrying a current I is located with its center at the origin of coordinates and the normal to its plane having spherical angles θ_0, ϕ_0. There is an applied magnetic field, $B_x = B_0(1 + \beta y)$ and $B_y = B_0(1 + \beta x)$.

(a) Calculate the force acting on the loop without making any approximations. Compare your result with the approximate result (5.69). Comment.

(b) Calculate the torque in lowest order. Can you deduce anything about the higher order contributions? Do they vanish for the circular loop? What about for other shapes?

5.12 Two concentric circular loops of radii a, b and currents I, I', respectively ($b < a$), have an angle α between their planes. Show that the torque on one of the loops is about the line of intersection of the two planes containing the loops and has the magnitude.

$$N = \frac{\mu_0 \pi I I' b^2}{2a} \sum_{n=0}^{\infty} \frac{(n+1)}{(2n+1)} \left[\frac{\Gamma(n + \frac{3}{2})}{\Gamma(n+2)\Gamma(\frac{3}{2})} \right]^2 \left(\frac{b}{a}\right)^{2n} P^1_{2n+1}(\cos\alpha)$$

where $P^1_l(\cos\alpha)$ is an associated Legendre polynomial. Determine the sense of the torque for α an acute angle and the currents in the same (opposite) directions.

5.13 A sphere of radius a carries a uniform surface-charge distribution σ. The sphere is rotated about a diameter with constant angular velocity ω. Find the vector potential and magnetic-flux density both inside and outside the sphere.

5.14 A long, hollow, right circular cylinder of inner (outer) radius a (b), and of relative permeability μ_r, is placed in a region of initially uniform magnetic-flux density $\mathbf{B}_0$ at right angles to the field. Find the flux density at all points in space, and sketch the logarithm of the ratio of the magnitudes of **B** on the cylinder axis to $\mathbf{B}_0$ as a function of $\log_{10} \mu_r$ for $a^2/b^2 = 0.5, 0.1$. Neglect end effects.

5.15 Consider two long, straight wires, parallel to the z axis, spaced a distance d apart and carrying currents I in opposite directions. Describe the magnetic field **H** in terms of a magnetic scalar potential Φ_M, with $\mathbf{H} = -\nabla\Phi_M$.

(a) If the wires are parallel to the z axis with positions, $x = \pm d/2$, $y = 0$, show that in the limit of small spacing, the potential is approximately that of a two-dimensional dipole,

$$\Phi_M \approx -\frac{Id \sin\phi}{2\pi\rho} + O(d^2/\rho^2)$$

where ρ and ϕ are the usual polar coordinates.

(b) The closely spaced wires are now centered in a hollow right circular cylinder of steel, of inner (outer) radius a (b) and magnetic permeability $\mu = \mu_r\mu_0$. Determine the magnetic scalar potential in the three regions, $0 < \rho < a$, $a < \rho < b$, and $\rho > b$. Show that the field outside the steel cylinder is a two-dimensional dipole field, as in part a, but with a strength reduced by the factor

$$F = \frac{4\mu_r b^2}{(\mu_r + 1)^2 b^2 - (\mu_r - 1)^2 a^2}$$

Relate your result to Problem 5.14.

(c) Assuming that $\mu_r \gg 1$, and $b = a + t$, where the thickness $t \ll b$, write down an approximate expression for F and determine its numerical value for

$\mu_r = 200$ (typical of steel at 20 G), $b = 1.25$ cm, $t = 3$ mm. The shielding effect is relevant for reduction of stray fields in residential and commercial 60 Hz, 110 or 220 V wiring. The figure illustrates the shielding effect for $a/b = 0.9$, $\mu_r = 100$.

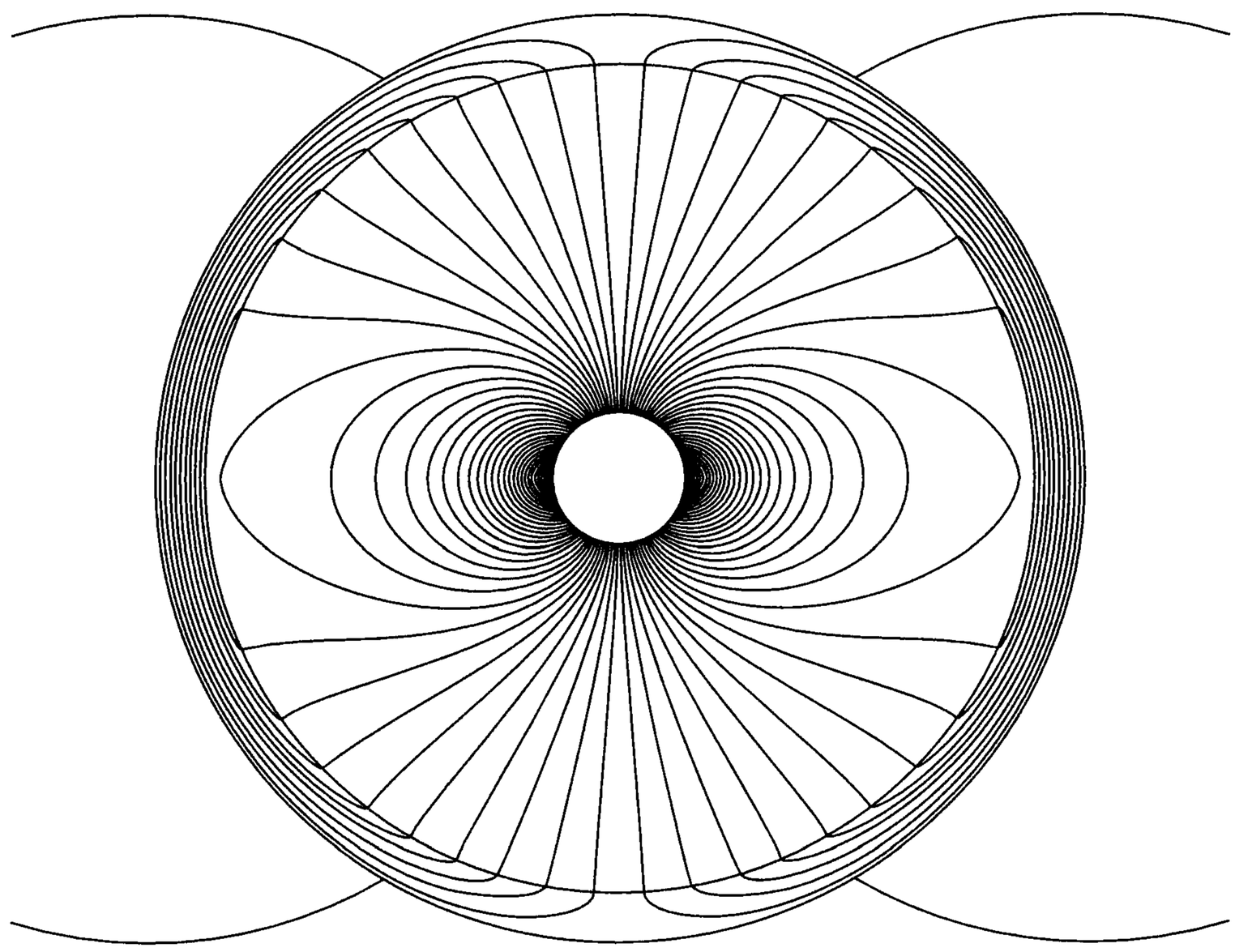

Problem 5.15

5.16 A circular loop of wire of radius a and negligible thickness carries a current I. The loop is centered in a spherical cavity of radius $b > a$ in a large block of soft iron. Assume that the relative permeability of the iron is effectively infinite and that of the medium in the cavity, unity.

(a) In the approximation of $b \gg a$, show that the magnetic field at the center of the loop is augmented by a factor $(1 + a^3/2b^3)$ by the presence of the iron.

(b) What is the radius of the "image" current loop (carrying the same current) that simulates the effect of the iron for $r < b$?

5.17 A current distribution $\mathbf{J}(\mathbf{x})$ exists in a medium of unit relative permeability adjacent to a semi-infinite slab of material having relative permeability μ_r and filling the half-space, $z < 0$.

(a) Show that for $z > 0$ the magnetic induction can be calculated by replacing the medium of permeability μ_r by an image current distribution, $\mathbf{J}^*$, with components,

$$\left(\frac{\mu_r - 1}{\mu_r + 1}\right)J_x(x, y, -z), \qquad \left(\frac{\mu_r - 1}{\mu_r + 1}\right)J_y(x, y, -z), \qquad -\left(\frac{\mu_r - 1}{\mu_r + 1}\right)J_z(x, y, -z)$$

(b) Show that for $z < 0$ the magnetic induction appears to be due to a current distribution $[2\mu_r/(\mu_r + 1)]\mathbf{J}$ in a medium of unit relative permeability.

5.18 A circular loop of wire having a radius a and carrying a current I is located in vacuum with its center a distance d away from a semi-infinite slab of permeability μ. Find the force acting on the loop when

(a) the plane of the loop is parallel to the face of the slab,

(b) the plane of the loop is perpendicular to the face of the slab.

(c) Determine the limiting form of your answer to parts a and b when $d \gg a$. Can you obtain these limiting values in some simple and direct way?

5.19 A magnetically "hard" material is in the shape of a right circular cylinder of length L and radius a. The cylinder has a permanent magnetization M_0, uniform throughout its volume and parallel to its axis.

(a) Determine the magnetic field $\mathbf{H}$ and magnetic induction $\mathbf{B}$ at all points on the axis of the cylinder, both inside and outside.

(b) Plot the ratios $\mathbf{B}/\mu_0 M_0$ and $\mathbf{H}/M_0$ on the axis as functions of z for $L/a = 5$.

5.20 **(a)** Starting from the force equation (5.12) and the fact that a magnetization $\mathbf{M}$ inside a volume V bounded by a surface S is equivalent to a volume current density $\mathbf{J}_M = (\nabla \times \mathbf{M})$ and a surface current density $(\mathbf{M} \times \mathbf{n})$, show that in the absence of macroscopic conduction currents the total magnetic force on the body can be written

$$\mathbf{F} = -\int_V (\nabla \cdot \mathbf{M})\mathbf{B}_e \, d^3x + \int_S (\mathbf{M} \cdot \mathbf{n})\mathbf{B}_e \, da$$

where $\mathbf{B}_e$ is the applied magnetic induction (not including that of the body in question). The force is now expressed in terms of the effective charge densities ρ_M and σ_M. If the distribution of magnetization is not discontinuous, the surface can be at infinity and the force given by just the volume integral.

(b) A sphere of radius R with uniform magnetization has its center at the origin of coordinates and its direction of magnetization making spherical angles θ_0, ϕ_0. If the external magnetic field is the same as in Problem 5.11, use the expression of part a to evaluate the components of the force acting on the sphere.

5.21 A magnetostatic field is due entirely to a localized distribution of permanent magnetization.

(a) Show that

$$\int \mathbf{B} \cdot \mathbf{H} \, d^3x = 0$$

provided the integral is taken over all space.

(b) From the potential energy (5.72) of a dipole in an external field, show that for a continuous distribution of permanent magnetization the magnetostatic energy can be written

$$W = \frac{\mu_0}{2} \int \mathbf{H} \cdot \mathbf{H} \, d^3x = -\frac{\mu_0}{2} \int \mathbf{M} \cdot \mathbf{H} \, d^3x$$

apart from an additive constant, which is independent of the orientation or position of the various constituent magnetized bodies.

5.22 Show that in general a long, straight bar of uniform cross-sectional area A with uniform lengthwise magnetization M, when placed with its flat end against an infinitely permeable flat surface, adheres with a force given approximately by

$$F \simeq \frac{\mu_0}{2} A M^2$$

Relate your discussion to the electrostatic considerations in Section 1.11.

5.23 A right circular cylinder of length L and radius a has a uniform lengthwise magnetization M.

(a) Show that, when it is placed with its flat end against an infinitely permeable plane surface, it adheres with a force

$$F = 2\mu_0 a L M^2 \left[\frac{K(k) - E(k)}{k} - \frac{K(k_1) - E(k_1)}{k_1} \right]$$

where

$$k = \frac{2a}{\sqrt{4a^2 + L^2}}, \qquad k_1 = \frac{a}{\sqrt{a^2 + L^2}}$$

(b) Find the limiting form for the force if $L \gg a$.

5.24 **(a)** For the perfectly conducting plane of Section 5.13 with the circular hole in it and the asymptotically uniform tangential magnetic field $\mathbf{H}_0$ on one side, calculate the added tangential magnetic field $\mathbf{H}^{(1)}$ on the side of the plane with $\mathbf{H}_0$. Show that its components for $\rho > a$ are

$$H_x^{(1)} = \frac{2H_0 a^3}{\pi} \frac{xy}{\rho^4 \sqrt{\rho^2 - a^2}}$$

$$H_y^{(1)} = \frac{2H_0 a^3}{\pi} \frac{y^2}{\rho^4 \sqrt{\rho^2 - a^2}} + \frac{H_0}{\pi} \left[\frac{a}{\rho} \sqrt{1 - \frac{a^2}{\rho^2}} - \sin^{-1}\left(\frac{a}{\rho}\right) \right]$$

(b) Sketch the lines of surface current flow in the neighborhood of the hole on both sides of the plane.

5.25 A flat right rectangular loop carrying a constant current I_1 is placed near a long straight wire carrying a current I_2. The loop is oriented so that its center is a perpendicular distance d from the wire; the sides of length a are parallel to the wire and the sides of length b make an angle α with the plane containing the wire and the loop's center. The direction of the current I_1 is the same as that of I_2 in the side of the rectangle nearest the wire.

(a) Show that the interaction magnetic energy

$$W_{12} = \int \mathbf{J}_1 \cdot \mathbf{A}_2 \, d^3x = I_1 F_2$$

(where F_2 is the magnetic flux from I_2 linking the rectangular circuit carrying I_1), is

$$W_{12} = \frac{\mu_0 I_1 I_2 a}{4\pi} \ln \left[\frac{4d^2 + b^2 + 4d\, b \cos\alpha}{4d^2 + b^2 - 4d\, b \cos\alpha} \right]$$

(b) Calculate the force between the loop and the wire for fixed currents.

(c) Repeat the calculation for a circular loop of radius a, whose plane is parallel to the wire and makes an angle α with respect to the plane containing the center of the loop and the wire. Show that the interaction energy is

$$W_{12} = \mu_0 I_1 I_2 \, d \cdot \mathrm{Re}\, \{e^{\imath\alpha} - \sqrt{e^{2\imath\alpha} - a^2/d^2}\}$$

Find the force.

(d) For both loops, show that when $d \gg a,b$ the interaction energy reduces to $W_{12} \approx \mathbf{m} \cdot \mathbf{B}$, where $\mathbf{m}$ is the magnetic moment of the loop. Explain the sign.

5.26 A two-wire transmission line consists of a pair of nonpermeable parallel wires of radii a and b separated by a distance $d > a + b$. A current flows down one wire

and back the other. It is uniformly distributed over the cross section of each wire. Show that the self-inductance per unit length is

$$L = \frac{\mu_0}{4\pi}\left[1 + 2\ln\left(\frac{d^2}{ab}\right)\right]$$

5.27 A circuit consists of a long thin conducting shell of radius a and a parallel return wire of radius b on axis inside. If the current is assumed distributed uniformly throughout the cross section of the wire, calculate the self-inductance per unit length. What is the self-inductance if the inner conductor is a thin hollow tube?

5.28 Show that the mutual inductance of two circular coaxial loops in a homogeneous medium of permeability μ is

$$M_{12} = \mu\sqrt{ab}\left[\left(\frac{2}{k} - k\right)K(k) - \frac{2}{k}E(k)\right]$$

where

$$k^2 = \frac{4ab}{(a + b^2) + d^2}$$

and a, b are the radii of the loops, d is the distance between their centers, and K and E are the complete elliptic integrals.

Find the limiting value when $d \ll a$, b and $a \simeq b$.

5.29 The figure represents a transmission line consisting of two, parallel *perfect* conductors of arbitrary, but constant, cross section. Current flows down one conductor and returns via the other.

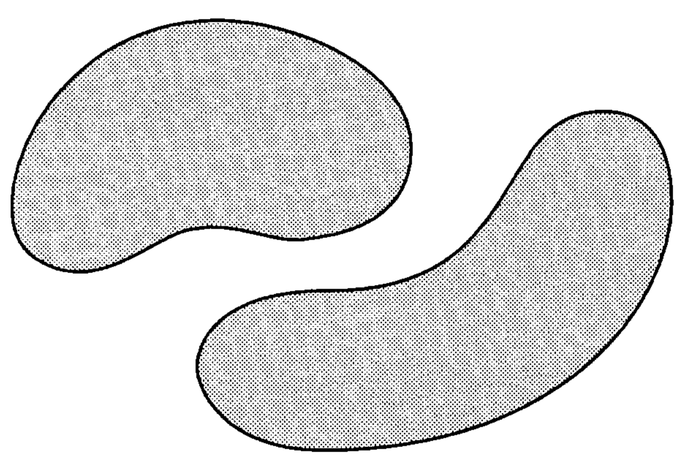

Problem 5.29

Show that the product of the inductance per unit length L and the capacitance per unit length C is

$$LC = \mu\epsilon$$

where μ and ϵ are the permeability and the permittivity of the medium surrounding the conductors. (See the discussion about magnetic fields near perfect conductors at the beginning of Section 5.13.)

5.30 **(a)** Show that a surface current density $K(\phi) = I\cos\phi/2R$ flowing in the axial direction on a right circular cylindrical surface of radius R produces inside the cylinder a uniform magnetic induction $B_0 = \mu_0 I/4R$ in a direction perpendicular to the cylinder axis. Show that the field outside is that of a two-dimensional dipole.

(b) Calculate the total magnetostatic field energy per unit length. How is it divided inside and outside the cylinder?

(c) What is the inductance per unit length of the system, viewed as a long circuit with current flowing up one side of the cylinder and back the other?

Answer: $L = \pi\mu_0/8$.

5.31 An accelerator bending magnet consists of N turns of superconducting cable whose current configuration can be described approximately by the axial current density

$$J_z(\rho, \phi) = \left(\frac{NI}{2R}\right)\cos\phi\ \delta(\rho - R)$$

The right circular current cylinder is centered on the axis of a hollow iron cylinder of inner radius R' ($R' > R$). The relative dimensions (R, R' a few centimeters and a magnet length of several meters) permit the use of a two-dimensional approximation, at least away from the ends of the magnet. Assume that the relative permeability of the iron can be taken as infinite. [Then the outer radius of the iron is irrelevant.]

(a) Show that the magnetic field inside the current sheath is perpendicular to the axis of the cylinder in the direction defined by $\phi = \pm\pi/2$ and has the magnitude

$$B_0 = \left(\frac{\mu_0 NI}{4R}\right)\left[1 + \frac{R^2}{R'^2}\right]$$

(b) Show that the magnetic energy inside $r = R$ is augmented (and that outside diminished) relative to the values in the absence of the iron. (Compare part b of Problem 5.30.)

(c) Show that the inductance per unit length is

$$\frac{dL}{dz} = \left(\frac{\pi\mu_0 N^2}{8}\right)\left[1 + \frac{R^2}{R'^2}\right]$$

5.32 A circular loop of mean radius a is made of wire having a circular cross section of radius b, with $b \ll a$. The sketch shows the relevant dimensions and coordinates for this problem.

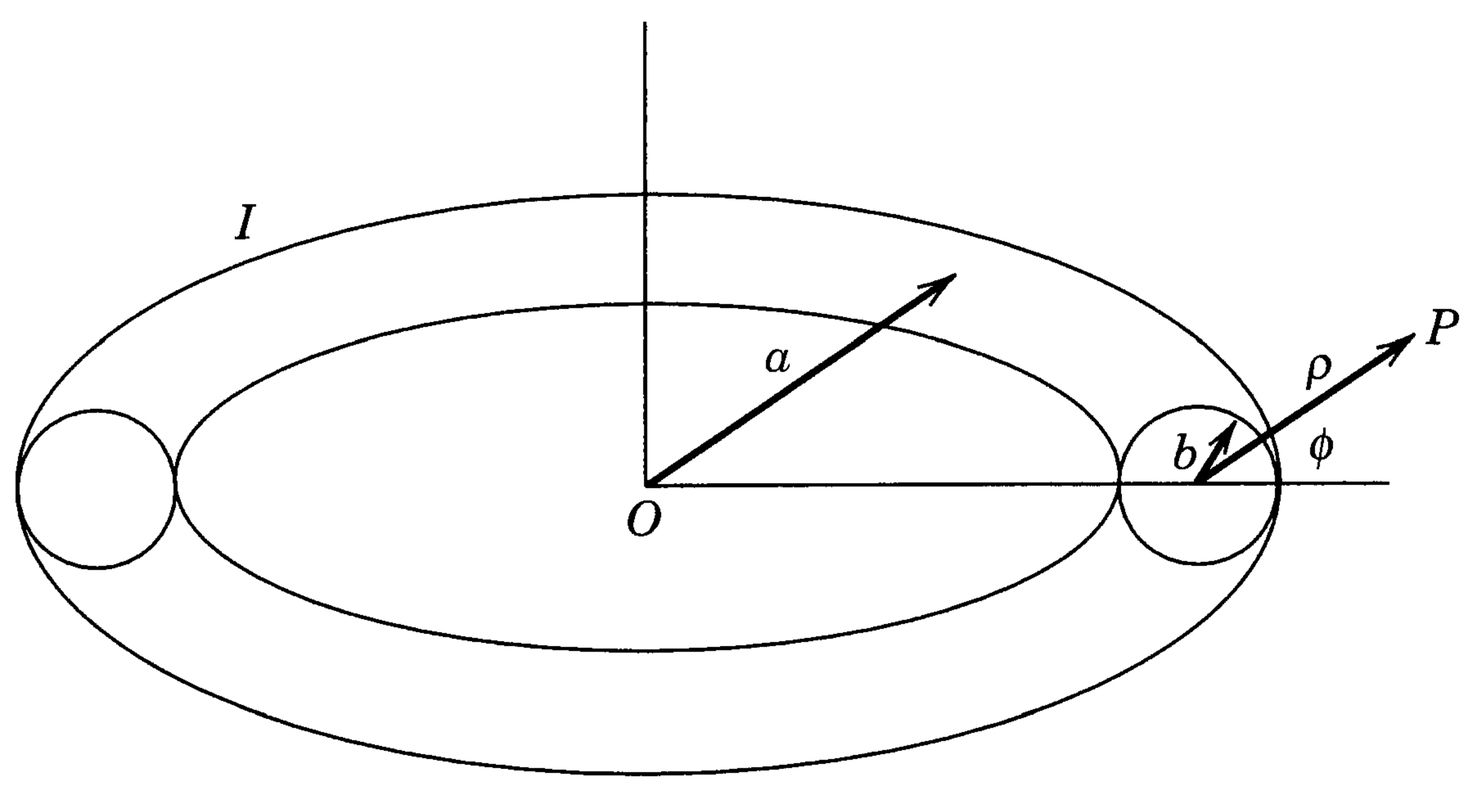

Problem 5.32

(a) Using (5.37), the expression for the vector potential of a filamentary circular loop, and appropriate approximations for the elliptic integrals, show that the vector potential at the point P near the wire is approximately

$$A_\phi = (\mu_0 I/2\pi)[\ln(8a/\rho) - 2]$$

where ρ is the transverse coordinate shown in the figure and corrections are of order $(\rho/a)\cos\phi$ and $(\rho/a)^2$.

(b) Since the vector potential of part a is, apart from a constant, just that outside a straight circular wire carrying a current I, determine the vector potential inside the wire ($\rho < b$) in the same approximation by requiring continuity of

A_ϕ and its radial derivative at $\rho = b$, assuming that the current is uniform in density inside the wire:

$$A_\phi = (\mu_0 I/4\pi)(1 - \rho^2/b^2) + (\mu_0 I/2\pi)[\ln(8a/b) - 2], \qquad \rho < b$$

(c) Use (5.149) to find the magnetic energy, hence the self-inductance,

$$L = \mu_0 a[\ln(8a/b) - 7/4]$$

Are the corrections of order b/a or $(b/a)^2$? What is the change in L if the current is assumed to flow only on the surface of the wire (as occurs at high frequencies when the skin depth is small compared to b)?

5.33 Consider two current loops (as in Fig. 5.3) whose orientation in space is fixed, but whose relative separation can be changed. Let O_1 and O_2 be origins in the two loops, fixed relative to each loop, and $\mathbf{x}_1$ and $\mathbf{x}_2$ be coordinates of elements $d\mathbf{l}_1$ and $d\mathbf{l}_2$, respectively, of the loops referred to the respective origins. Let $\mathbf{R}$ be the relative coordinate of the origins, directed from loop 2 to loop 1.

(a) Starting from (5.10), the expression for the force between the loops, show that it can be written

$$\mathbf{F}_{12} = I_1 I_2 \nabla_R M_{12}(\mathbf{R})$$

where M_{12} is the mutual inductance of the loops,

$$M_{12}(\mathbf{R}) = \frac{\mu_0}{4\pi} \oint \oint \frac{d\mathbf{l}_1 \cdot d\mathbf{l}_2}{|\mathbf{x}_1 - \mathbf{x}_2 + \mathbf{R}|}$$

and it is assumed that the orientation of the loops does not change with $\mathbf{R}$.

(b) Show that the mutual inductance, viewed as a function of $\mathbf{R}$, is a solution of the Laplace equation,

$$\nabla_R^2 M_{12}(\mathbf{R}) = 0$$

The importance of this result is that the uniqueness of solutions of the Laplace equation allows the exploitation of the properties of such solutions, provided a solution can be found for a particular value of $\mathbf{R}$.

5.34 Two identical circular loops of radius a are initially located a distance R apart on a common axis perpendicular to their planes.

(a) From the expression $W_{12} = \int d^3x\, \mathbf{J}_1 \cdot \mathbf{A}_2$ and the result for A_ϕ from Problem 5.10b, show that the mutual inductance of the loops is

$$M_{12} = \mu_0 \pi a^2 \int_0^\infty dk\, e^{-kR} J_1^2(ka)$$

(b) Show that for $R > 2a$, M_{12} has the expansion,

$$M_{12} = \frac{\mu_0 \pi a}{2}\left[\left(\frac{a}{R}\right)^3 - 3\left(\frac{a}{R}\right)^5 + \frac{75}{8}\left(\frac{a}{R}\right)^7 + \cdots\right]$$

(c) Use the techniques of Section 3.3 for solutions of the Laplace equation to show that the mutual inductance for two coplanar identical circular loops of radius a whose centers are separated by a distance $R > 2a$ is

$$M_{12} = -\frac{\mu_0 \pi a}{4}\left[\left(\frac{a}{R}\right)^3 + \frac{9}{4}\left(\frac{a}{R}\right)^5 + \frac{375}{64}\left(\frac{a}{R}\right)^7 + \cdots\right]$$

(d) Calculate the forces between the loops in the common axis and coplanar configurations. Relate the answers to those of Problem 5.18.

5.35 An insulated coil is wound on the surface of a sphere of radius a in such a way as to produce a uniform magnetic induction B_0 in the z direction inside the sphere and dipole field outside the sphere. The medium inside and outside the sphere has a uniform conductivity σ and permeability μ.

(a) Find the necessary surface current density $\mathbf{K}$ and show that the vector potential describing the magnetic field has only an azimuthal component, given by

$$A_\phi = \frac{B_0 a^2}{2} \frac{r_<}{r_>^2} \sin\theta$$

where $r_<$ ($r_>$) is the smaller (larger) of r and a.

(b) At $t = 0$ the current in the coil is cut off. [The coil's presence may be ignored from now on.] With the neglect of Maxwell's displacement current, the decay of the magnetic field is described by the diffusion equation, (5.160). Using a Laplace transform and a spherical Bessel function expansion (3.113), show that the vector potential at times $t > 0$ is given by

$$A_\phi = \frac{3B_0 a}{\pi} \sin\theta \int_0^\infty e^{-\nu t k^2} j_1(k) j_1\left(\frac{kr}{a}\right) dk$$

where $\nu = 1/\mu\sigma a^2$ is a characteristic decay rate and $j_1(x)$ is the spherical Bessel function of order one. Show that the magnetic field at the center of the sphere can be written explicitly in terms of the error function $\Phi(x)$ as

$$B_z(0, t) = B_0\left[\Phi\left(\frac{1}{\sqrt{4\nu t}}\right) - \frac{1}{\sqrt{\pi\nu t}} \exp\left(-\frac{1}{4\nu t}\right)\right]$$

(c) Show that the total magnetic energy at time $t > 0$ can be written

$$W_\mathrm{m} = \frac{6B_0^2 a^3}{\mu} \int_0^\infty e^{-2\nu t k^2} [j_1(k)]^2 \, dk$$

Show that at long times ($\nu t \gg 1$) the magnetic energy decays asymptotically as

$$W_\mathrm{m} \to \frac{\sqrt{2\pi} B_0^2 a^3}{24\mu(\nu t)^{3/2}}$$

(d) Find a corresponding expression for the asymptotic form of the vector potential (at fixed r, θ and $\nu t \to \infty$) and show that it decays as $(\nu t)^{-3/2}$ as well. Since the energy is quadratic in the field strength, there seems to be a puzzle here. Show by numerical or analytic means that the behavior of the magnetic field at time t is such that, for distances small compared to $R = a(\nu t)^{1/2} \gg a$, the field is uniform with strength $(B_0/6\pi^{1/2})\,(\nu t)^{-3/2}$, and for distances large compared to R, the field is essentially the original dipole field. Explain physically.

5.36 The time-varying magnetic field for $t > 0$ in Problem 5.35 induces an electric field and causes current to flow.

(a) What components of electric field exist? Determine integral expressions for the components of the electric field and find a simple explicit form of the current density $\mathbf{J} = \sigma\mathbf{E}$ at $t = 0^+$. Compare your result with the current density of Problem 5.35a. Find the asymptotic behavior of the electric fields in time.

(b) With Ohm's law and the electric fields found in part a, show that the total power dissipated in the resistive medium can be written

$$P = \frac{12B_0^2 a^3 \nu}{\mu} \int_0^\infty e^{-2\nu t k^2} [k j_1(k)]^2 \, dk$$

Note that the power is the negative time derivative of the *magnetic* energy, W_m.

(c) Because of Ohm's law, the total *electric* energy is $W_e = \epsilon_0 P/2\sigma$. The total energy is the sum of W_e and W_m; its time derivative should be the negative of the power dissipation. Show that the neglect of the energy in the electric field is the same order of approximation as neglect of the displacement current in the equations governing the magnetic field.