CHAPTER 2

Boundary-Value Problems in Electrostatics: I

Many problems in electrostatics involve boundary surfaces on which either the potential or the surface-charge density is specified. The formal solution of such problems was presented in Section 1.10, using the method of Green functions. In practical situations (or even rather idealized approximations to practical situations) the discovery of the correct Green function is sometimes easy and sometimes not. Consequently a number of approaches to electrostatic boundary-value problems have been developed, some of which are only remotely connected to the Green function method. In this chapter we will examine three of these special techniques: (1) the method of images, which is closely related to the use of Green functions; (2) expansion in orthogonal functions, an approach directly through the differential equation and rather remote from the direct construction of a Green function; (3) an introduction to finite element analysis (FEA), a broad class of numerical methods. A major omission is the use of complex-variable techniques, including conformal mapping, for the treatment of two-dimensional problems. The topic is important, but lack of space and the existence of self-contained discussions elsewhere accounts for its absence. The interested reader may consult the references cited at the end of the chapter.

2.1 Method of Images

The method of images concerns itself with the problem of one or more point charges in the presence of boundary surfaces, for example, conductors either grounded or held at fixed potentials. Under favorable conditions it is possible to infer from the geometry of the situation that a small number of suitably placed charges of appropriate magnitudes, external to the region of interest, can simulate the required boundary conditions. These charges are called *image charges*, and the replacement of the actual problem with boundaries by an enlarged region with image charges but not boundaries is called the *method of images*. The image charges must be external to the volume of interest, since their potentials must be solutions of the Laplace equation inside the volume; the "particular integral" (i.e., solution of the Poisson equation) is provided by the sum of the potentials of the charges inside the volume.

A simple example is a point charge located in front of an infinite plane conductor at zero potential, as shown in Fig. 2.1. It is clear that this is equivalent to the problem of the original charge and an equal and opposite charge located at the mirror-image point behind the plane defined by the position of the conductor.

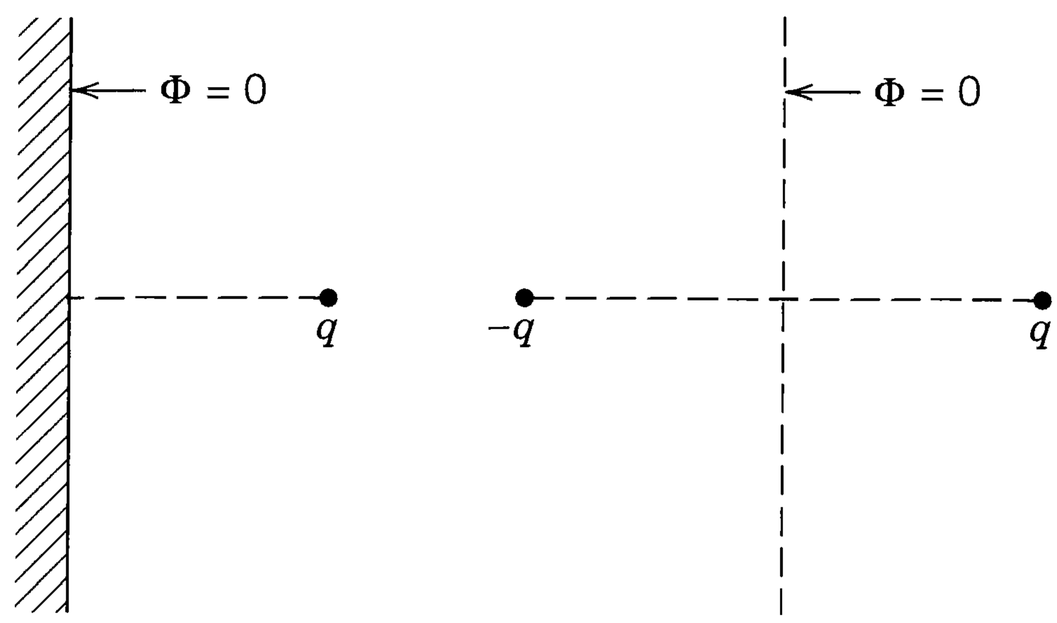

Figure 2.1 Solution by method of images. The original potential problem is on the left, the equivalent-image problem on the right.

2.2 *Point Charge in the Presence of a Grounded Conducting Sphere*

As an illustration of the method of images we consider the problem illustrated in Fig. 2.2 of a point charge q located at $\mathbf{y}$ relative to the origin, around which is centered a grounded conducting sphere of radius a. We seek the potential $\Phi(\mathbf{x})$ such that $\Phi(|\mathbf{x}| = a) = 0$. By symmetry it is evident that the image charge q' (assuming that only one image is needed) will lie on the ray from the origin to the charge q. If we consider the charge q *outside* the sphere, the image position $\mathbf{y}'$ will lie inside the sphere. The potential due to the charges q and q' is:

$$\Phi(\mathbf{x}) = \frac{q/4\pi\epsilon_0}{|\mathbf{x} - \mathbf{y}|} + \frac{q'/4\pi\epsilon_0}{|\mathbf{x} - \mathbf{y}'|} \tag{2.1}$$

We now must try to choose q' and $|\mathbf{y}'|$ such that this potential vanishes at $|\mathbf{x}| = a$. If $\mathbf{n}$ is a unit vector in the direction $\mathbf{x}$, and $\mathbf{n}'$ a unit vector in the direction $\mathbf{y}$, then

$$\Phi(\mathbf{x}) = \frac{q/4\pi\epsilon_0}{|x\mathbf{n} - y\mathbf{n}'|} + \frac{q'/4\pi\epsilon_0}{|x\mathbf{n} - y'\mathbf{n}'|} \tag{2.2}$$

If x is factored out of the first term and y' out of the second, the potential at $x = a$ becomes:

$$\Phi(x = a) = \frac{q/4\pi\epsilon_0}{a\left|\mathbf{n} - \dfrac{y}{a}\mathbf{n}'\right|} + \frac{q'/4\pi\epsilon_0}{y'\left|\mathbf{n}' - \dfrac{a}{y'}\mathbf{n}\right|} \tag{2.3}$$

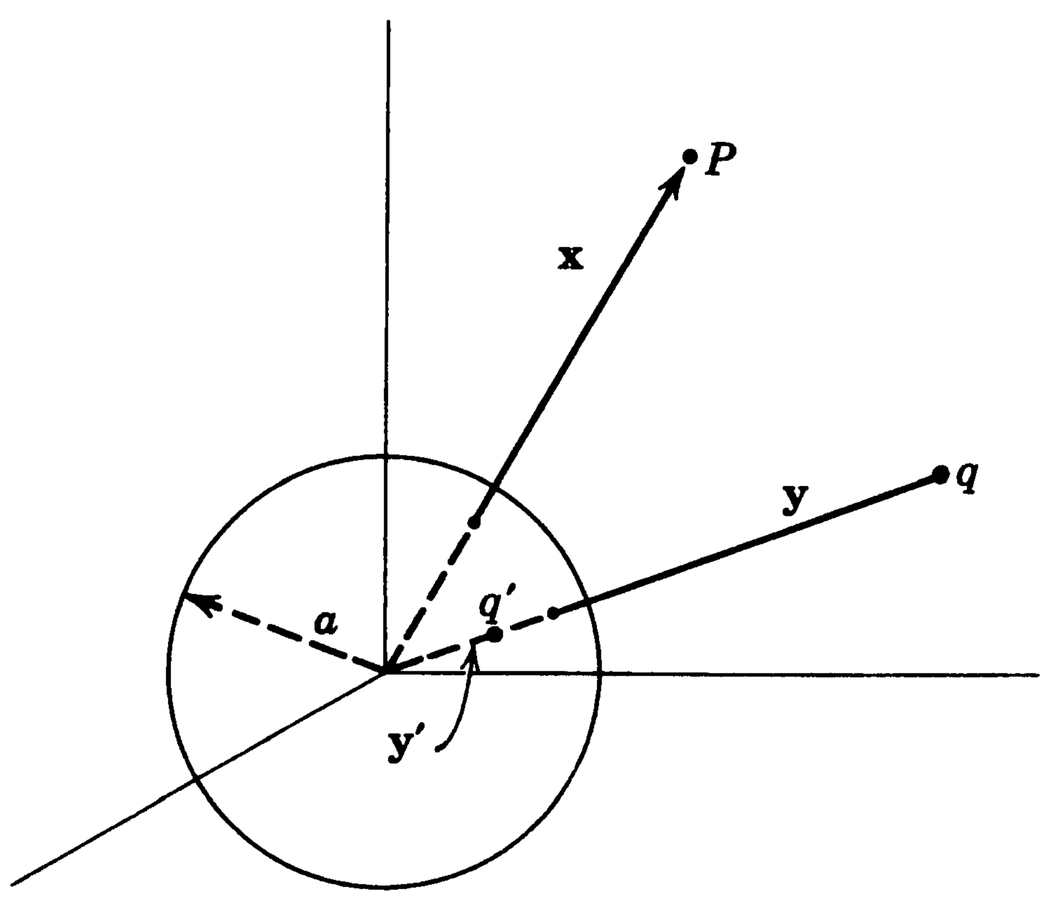

Figure 2.2 Conducting sphere of radius a, with charge q and image charge q'.

From the form of (2.3) it will be seen that the choices:

$$\frac{q}{a} = -\frac{q'}{y'}, \qquad \frac{y}{a} = \frac{a}{y'}$$

make $\Phi(x = a) = 0$, for all possible values of $\mathbf{n} \cdot \mathbf{n}'$. Hence the magnitude and position of the image charge are

$$q' = -\frac{a}{y} q, \qquad y' = \frac{a^2}{y} \tag{2.4}$$

We note that, as the charge q is brought closer to the sphere, the image charge grows in magnitude and moves out from the center of the sphere. When q is just outside the surface of the sphere, the image charge is equal and opposite in magnitude and lies just beneath the surface.

Now that the image charge has been found, we can return to the original problem of a charge q outside a grounded conducting sphere and consider various effects. The actual charge density induced on the surface of the sphere can be calculated from the normal derivative of Φ at the surface:

$$\sigma = -\epsilon_0 \left.\frac{\partial \Phi}{\partial x}\right|_{x=a} = -\frac{q}{4\pi a^2}\left(\frac{a}{y}\right) \frac{1 - \dfrac{a^2}{y^2}}{\left(1 + \dfrac{a^2}{y^2} - 2\dfrac{a}{y}\cos\gamma\right)^{3/2}} \tag{2.5}$$

where γ is the angle between $\mathbf{x}$ and $\mathbf{y}$. This charge density in units of $-q/4\pi a^2$ is shown plotted in Fig. 2.3 as a function of γ for two values of y/a. The concentra-

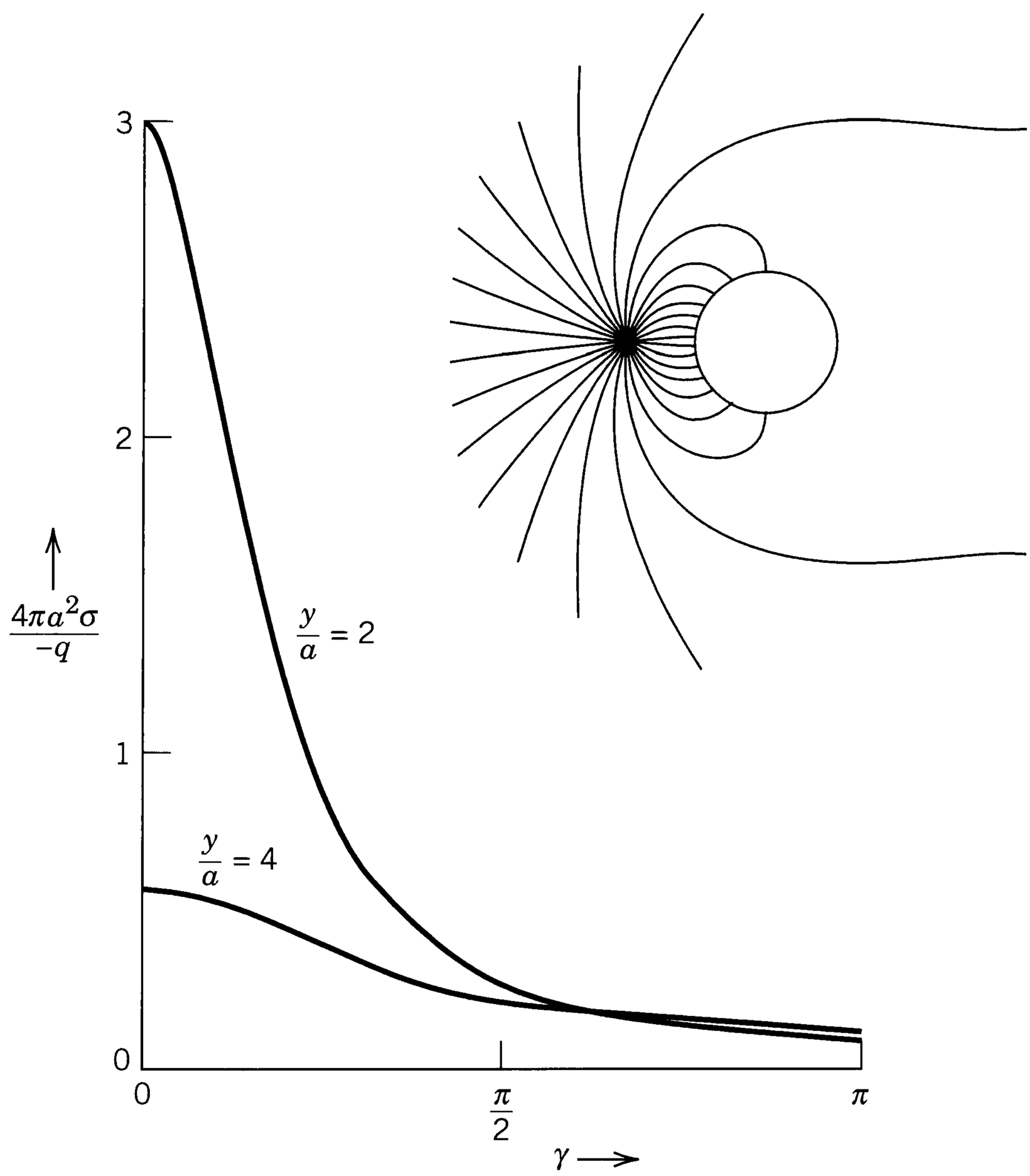

Figure 2.3 Surface-charge density σ induced on the grounded sphere of radius a as a result of the presence of a point charge q located a distance y away from the center of the sphere. σ is plotted in units of $-q/4\pi a^2$ as a function of the angular position γ away from the radius to the charge for $y = 2a$, $4a$. Inset shows lines of force for $y = 2a$.

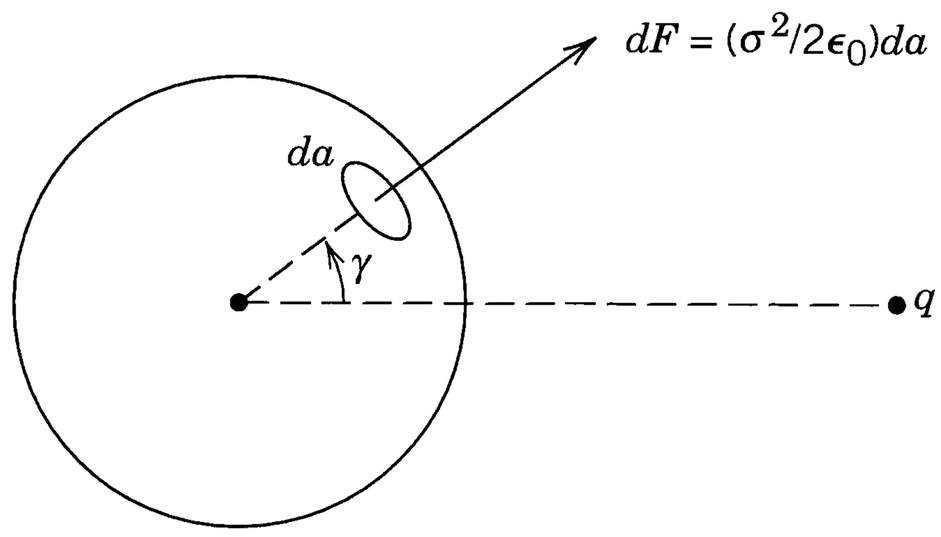

Figure 2.4

tion of charge in the direction of the point charge q is evident, especially for $y/a = 2$. It is easy to show by direct integration that the total induced charge on the sphere is equal to the magnitude of the image charge, as it must be, according to Gauss's law.

The force acting on the charge q can be calculated in different ways. One (the easiest) way is to write down immediately the force between the charge q and the image charge q'. The distance between them is $y - y' = y(1 - a^2/y^2)$. Hence the attractive force, according to Coulomb's law, is:

$$|\mathbf{F}| = \frac{1}{4\pi\epsilon_0}\frac{q^2}{a^2}\left(\frac{a}{y}\right)^3\left(1 - \frac{a^2}{y^2}\right)^{-2} \tag{2.6}$$

For large separations the force is an inverse cube law, but close to the sphere it is proportional to the inverse square of the distance away from the surface of the sphere.

The alternative method for obtaining the force is to calculate the total force acting on the surface of the sphere. The force on each element of area da is $(\sigma^2/2\epsilon_0)\,da$, where σ is given by (2.5), as indicated in Fig. 2.4. But from symmetry it is clear that only the component parallel to the radius vector from the center of the sphere to q contributes to the total force. Hence the total force acting on the sphere (equal and opposite to the force acting on q) is given by the integral:

$$|\mathbf{F}| = \frac{q^2}{32\pi^2\epsilon_0 a^2}\left(\frac{a}{y}\right)^2\left(1 - \frac{a^2}{y^2}\right)^2 \int \frac{\cos\gamma}{\left(1 + \dfrac{a^2}{y^2} - \dfrac{2a}{y}\cos\gamma\right)^3}\, d\Omega \tag{2.7}$$

Integration immediately yields (2.6).

The whole discussion has been based on the understanding that the point charge q is *outside* the sphere. Actually, the results apply equally for the charge q *inside* the sphere. The only change necessary is in the surface-charge density (2.5), where the normal derivative out of the conductor is now radially inward, implying a change in sign. The reader may transcribe all the formulas, remembering that now $y \leq a$. The angular distributions of surface charge are similar to those of Fig. 2.3, but the total induced surface charge is evidently equal to $-q$, independent of y.

2.3 Point Charge in the Presence of a Charged, Insulated, Conducting Sphere

In the preceding section we considered the problem of a point charge q near a grounded sphere and saw that a surface-charge density was induced on the

sphere. This charge was of total amount $q' = -aq/y$, and was distributed over the surface in such a way as to be in equilibrium under all forces acting.

If we wish to consider the problem of an insulated conducting sphere with total charge Q in the presence of a point charge q, we can build up the solution for the potential by linear superposition. In an operational sense, we can imagine that we start with the grounded conducting sphere (with its charge q' distributed over its surface). We then disconnect the ground wire and add to the sphere an amount of charge $(Q - q')$. This brings the total charge on the sphere up to Q. To find the potential we merely note that the added charge $(Q - q')$ will distribute itself *uniformly* over the surface, since the electrostatic forces due to the point charge q are already balanced by the charge q'. Hence the potential due to the added charge $(Q - q')$ will be the same as if a point charge of that magnitude were at the origin, at least for points outside the sphere.

The potential is the superposition of (2.1) and the potential of a point charge $(Q - q')$ at the origin:

$$\Phi(\mathbf{x}) = \frac{1}{4\pi\epsilon_0}\left[\frac{q}{|\mathbf{x} - \mathbf{y}|} - \frac{aq}{y\left|\mathbf{x} - \dfrac{a^2}{y^2}\mathbf{y}\right|} + \frac{Q + \dfrac{a}{y}q}{|\mathbf{x}|}\right] \tag{2.8}$$

The force acting on the charge q can be written down directly from Coulomb's law. It is directed along the radius vector to q and has the magnitude:

$$\mathbf{F} = \frac{1}{4\pi\epsilon_0}\frac{q}{y^2}\left[Q - \frac{qa^3(2y^2 - a^2)}{y(y^2 - a^2)^2}\right]\frac{\mathbf{y}}{y} \tag{2.9}$$

In the limit of $y \gg a$, the force reduces to the usual Coulomb's law for two small charged bodies. But close to the sphere the force is modified because of the induced charge distribution on the surface of the sphere. Figure 2.5 shows the force as a function of distance for various ratios of Q/q. The force is expressed in units of $q^2/4\pi\epsilon_0 y^2$; positive (negative) values correspond to a repulsion (attraction). If the sphere is charged oppositely to q, or is uncharged, the force is attractive at all distances. Even if the charge Q is the same sign as q, however, the force becomes attractive at very close distances. In the limit of $Q \gg q$, the point of zero force (unstable equilibrium point) is very close to the sphere, namely, at $y \simeq a(1 + \frac{1}{2}\sqrt{q/Q})$. Note that the asymptotic value of the force is attained as soon as the charge q is more than a few radii away from the sphere.

This example exhibits a general property that explains why an excess of charge on the surface does not immediately leave the surface because of mutual repulsion of the individual charges. As soon as an element of charge is removed from the surface, the image force tends to attract it back. If sufficient work is done, of course, charge can be removed from the surface to infinity. The work function of a metal is in large part just the work done against the attractive image force to remove an electron from the surface.

2.4 *Point Charge Near a Conducting Sphere at Fixed Potential*

Another problem that can be discussed easily is that of a point charge near a conducting sphere held at a fixed potential V. The potential is the same as for

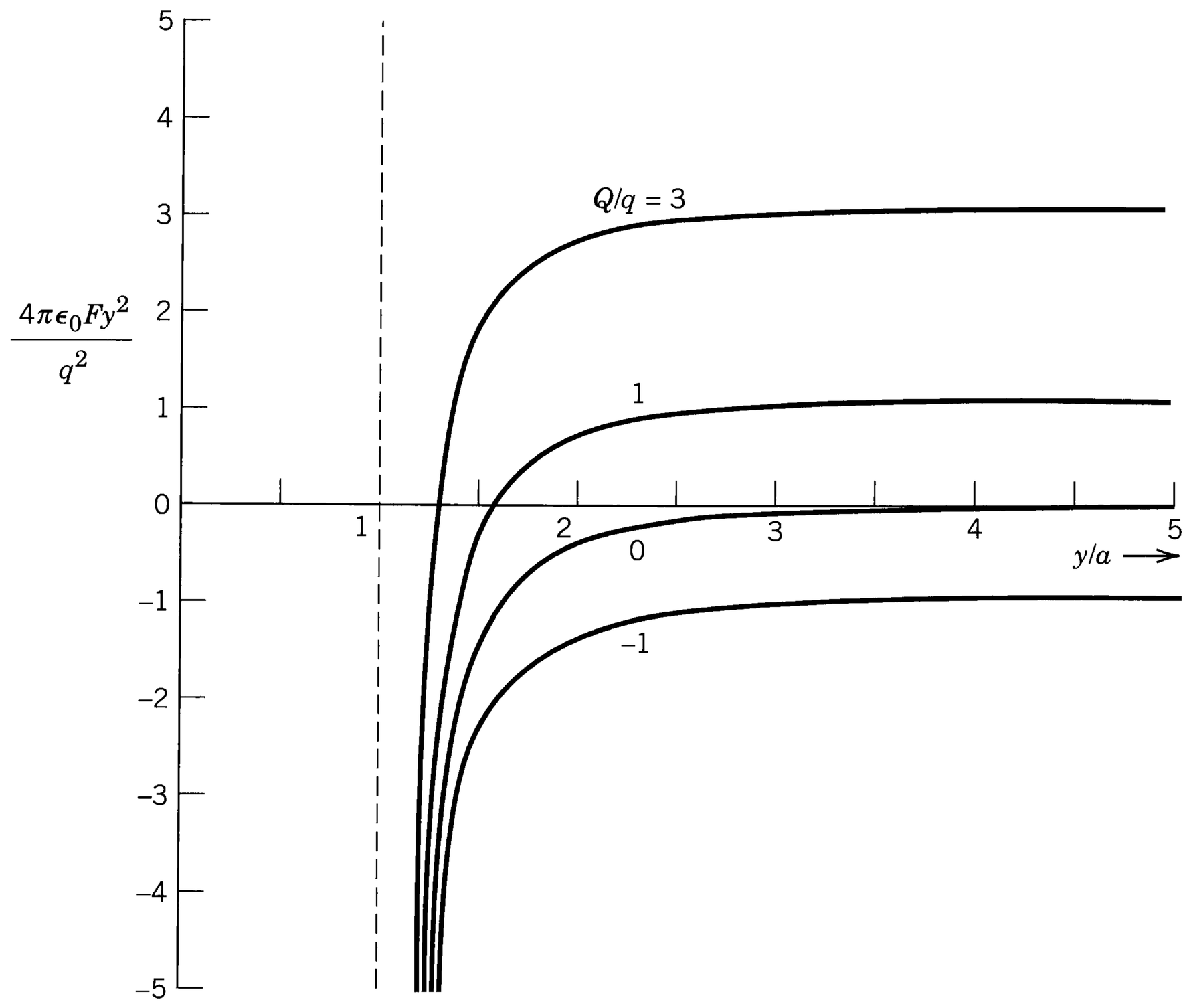

Figure 2.5 The force on a point charge q due to an insulated, conducting sphere of radius a carrying a total charge Q. Positive values mean a repulsion, negative an attraction. The asymptotic dependence of the force has been divided out. $4\pi\epsilon_0 F y^2/q^2$ is plotted versus y/a for $Q/q = -1, 0, 1, 3$. Regardless of the value of Q, the force is always attractive at close distances because of the induced surface charge.

the charged sphere, except that the charge $(Q - q')$ at the center is replaced by a charge (Va). This can be seen from (2.8), since at $|\mathbf{x}| = a$ the first two terms cancel and the last term will be equal to V as required. Thus the potential is

$$\Phi(\mathbf{x}) = \frac{1}{4\pi\epsilon_0}\left[\frac{q}{|\mathbf{x} - \mathbf{y}|} - \frac{aq}{y\left|\mathbf{x} - \frac{a^2}{y^2}\mathbf{y}\right|}\right] + \frac{Va}{|\mathbf{x}|} \tag{2.10}$$

The force on the charge q due to the sphere at fixed potential is

$$\mathbf{F} = \frac{q}{y^2}\left[Va - \frac{1}{4\pi\epsilon_0}\frac{qay^3}{(y^2 - a^2)^2}\right]\frac{\mathbf{y}}{y} \tag{2.11}$$

For corresponding values of $4\pi\epsilon_0 Va/q$ and Q/q this force is very similar to that of the charged sphere, shown in Fig. 2.5, although the approach to the asymptotic value (Vaq/y^2) is more gradual. For $Va \gg q$, the unstable equilibrium point has the equivalent location $y \simeq a(1 + \frac{1}{2}\sqrt{q/4\pi\epsilon_0 Va})$.

2.5 *Conducting Sphere in a Uniform Electric Field by Method of Images*

As a final example of the method of images we consider a conducting sphere of radius a in a uniform electric field E_0. A uniform field can be thought of as being

produced by appropriate positive and negative charges at infinity. For example, if there are two charges $\pm Q$, located at positions $z = \mp R$, as shown in Fig. 2.6*a*, then in a region near the origin whose dimensions are very small compared to R there is an approximately constant electric field $E_0 \simeq 2Q/4\pi\epsilon_0 R^2$ parallel to the z axis. In the limit as R, $Q \to \infty$, with Q/R^2 constant, this approximation becomes exact.

If now a conducting sphere of radius a is placed at the origin, the potential will be that due to the charges $\pm Q$ at $\mp R$ and their images $\mp Qa/R$ at $z = \mp a^2/R$:

$$\Phi = \frac{Q/4\pi\epsilon_0}{(r^2 + R^2 + 2rR\cos\theta)^{1/2}} - \frac{Q/4\pi\epsilon_0}{(r^2 + R^2 - 2rR\cos\theta)^{1/2}} - \frac{aQ/4\pi\epsilon_0}{R\left(r^2 + \dfrac{a^4}{R^2} + \dfrac{2a^2 r}{R}\cos\theta\right)^{1/2}} + \frac{aQ/4\pi\epsilon_0}{R\left(r^2 + \dfrac{a^4}{R^2} - \dfrac{2a^2 r}{R}\cos\theta\right)^{1/2}} \tag{2.12}$$

where Φ has been expressed in terms of the spherical coordinates of the observation point. In the first two terms R is much larger than r by assumption. Hence we can expand the radicals after factoring out R^2. Similarly, in the third and fourth terms, we can factor out r^2 and then expand. The result is:

$$\Phi = \frac{1}{4\pi\epsilon_0}\left[-\frac{2Q}{R^2}\, r\cos\theta + \frac{2Q}{R^2}\frac{a^3}{r^2}\cos\theta\right] + \cdots \tag{2.13}$$

where the omitted terms vanish in the limit $R \to \infty$. In that limit $2Q/4\pi\epsilon_0 R^2$ becomes the applied uniform field, so that the potential is

$$\Phi = -E_0\left(r - \frac{a^3}{r^2}\right)\cos\theta \tag{2.14}$$

The first term $(-E_0 z)$ is, of course, just the potential of a uniform field E_0 which could have been written down directly instead of the first two terms in (2.12).

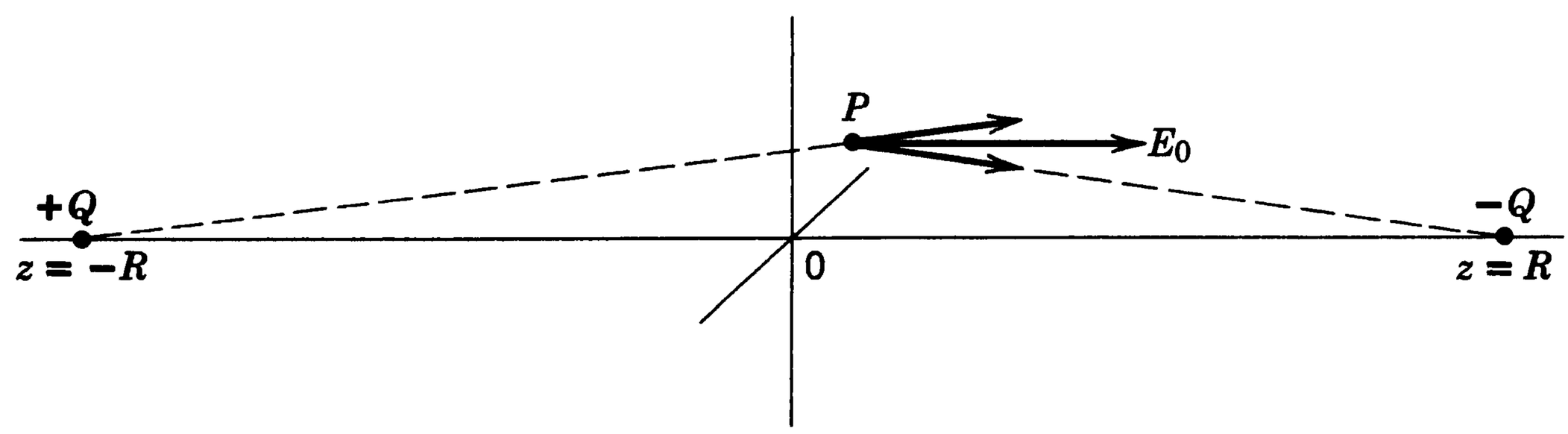

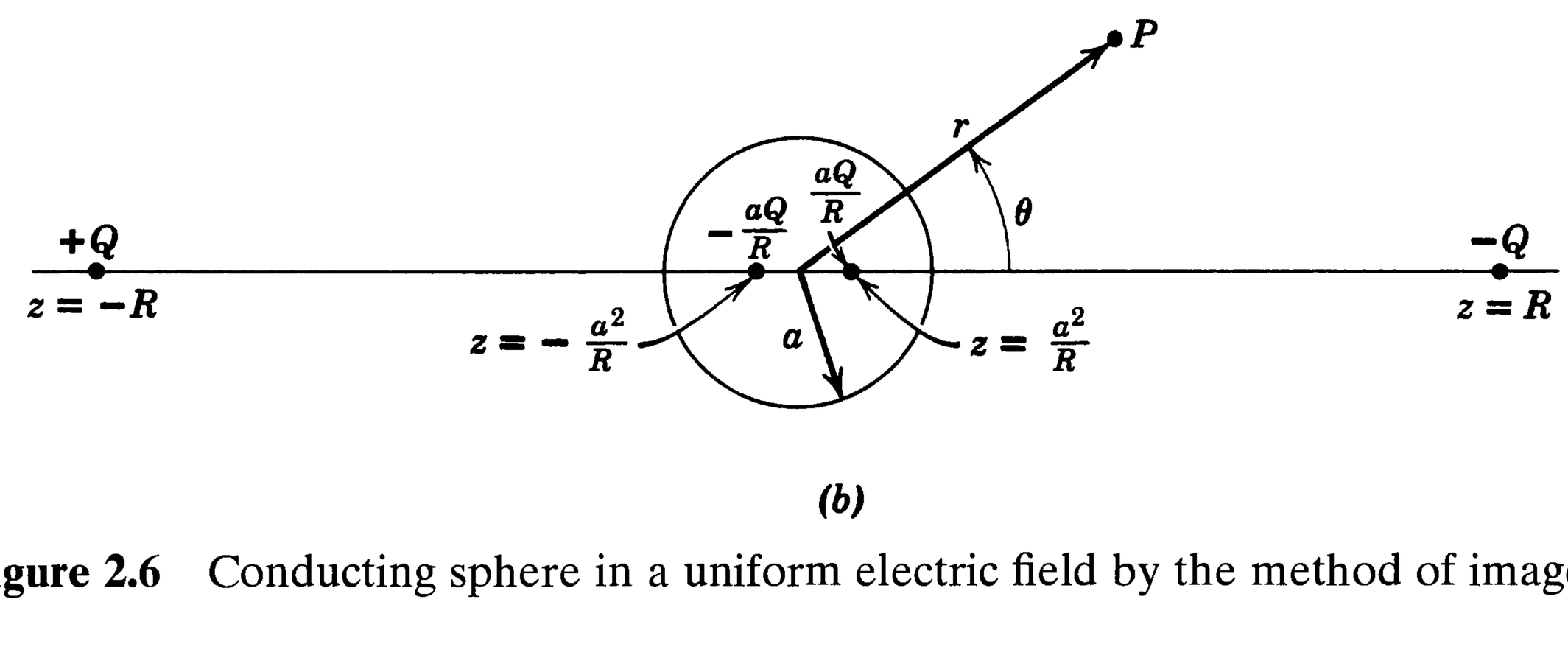

Figure 2.6 Conducting sphere in a uniform electric field by the method of images.

The second is the potential due to the induced surface-charge density or, equivalently, the image charges. Note that the image charges form a dipole of strength $D = Qa/R \times 2a^2/R = 4\pi\epsilon_0 E_0 a^3$. The induced surface-charge density is

$$\sigma = -\epsilon_0 \left.\frac{\partial \Phi}{\partial r}\right|_{r=a} = 3\epsilon_0 E_0 \cos\theta \tag{2.15}$$

We note that the surface integral of this charge density vanishes, so that there is no difference between a grounded and an insulated sphere.

2.6 Green Function for the Sphere; General Solution for the Potential

In preceding sections the problem of a conducting sphere in the presence of a point charge was discussed by the method of images. As mentioned in Section 1.10, the potential due to a unit source and its image (or images), chosen to satisfy homogeneous boundary conditions, is just the Green function (1.43 or 1.45) appropriate for Dirichlet or Neumann boundary conditions. In $G(\mathbf{x}, \mathbf{x}')$ the variable $\mathbf{x}'$ refers to the location P' of the unit source, while the variable $\mathbf{x}$ is the point P at which the potential is being evaluated. These coordinates and the sphere are shown in Fig. 2.7. For Dirichlet boundary conditions on the sphere of radius a the Green function defined via (1.39) for a unit source and its image is given by (2.1) with $q \to 4\pi\epsilon_0$ and relations (2.4). Transforming variables appropriately, we obtain the Green function:

$$G(\mathbf{x}, \mathbf{x}') = \frac{1}{|\mathbf{x} - \mathbf{x}'|} - \frac{a}{x'\left|\mathbf{x} - \dfrac{a^2}{x'^2}\mathbf{x}'\right|} \tag{2.16}$$

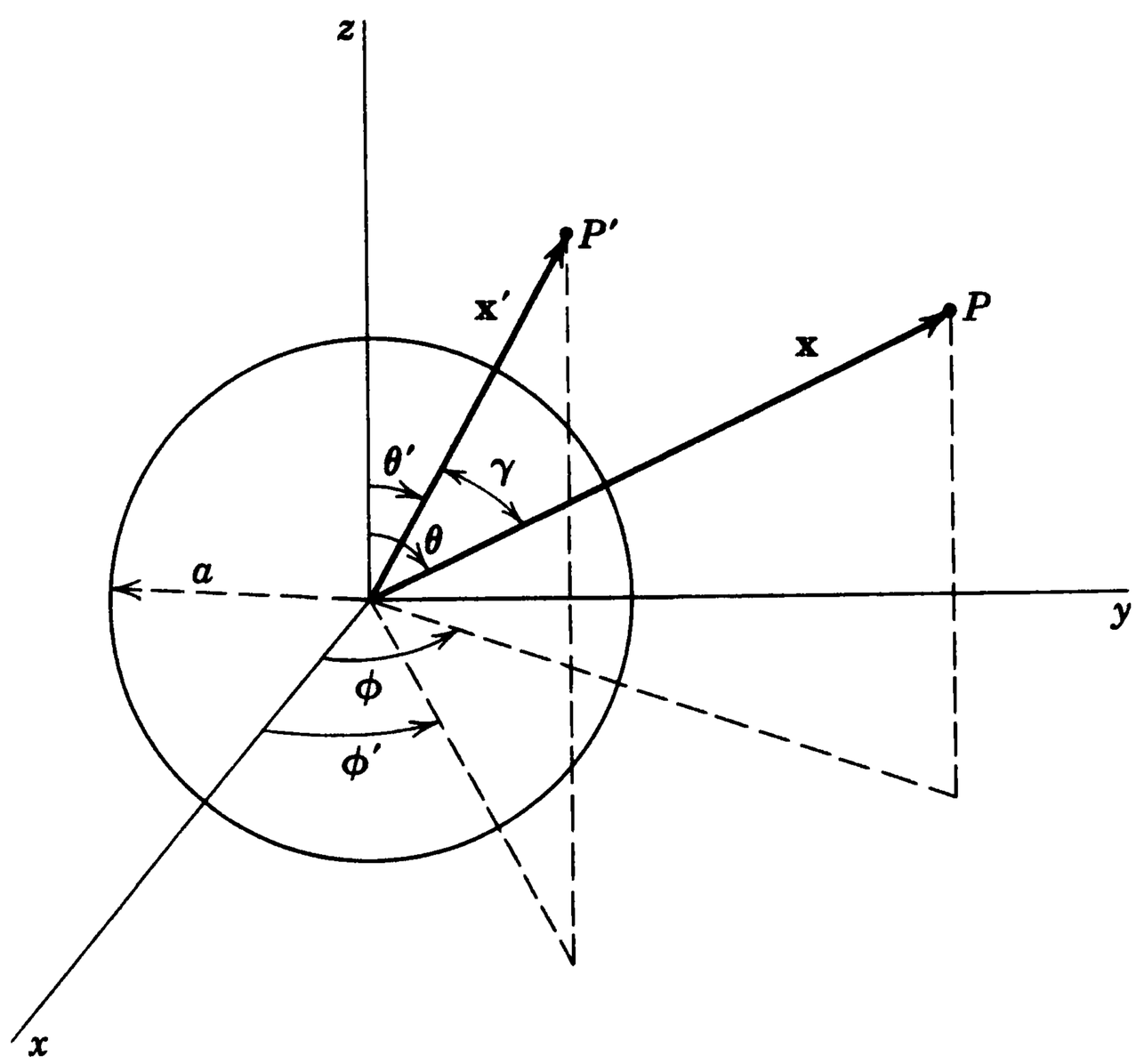

Figure 2.7

In terms of spherical coordinates this can be written:

$$G(\mathbf{x}, \mathbf{x}') = \frac{1}{(x^2 + x'^2 - 2xx' \cos\gamma)^{1/2}} - \frac{1}{\left(\dfrac{x^2x'^2}{a^2} + a^2 - 2xx' \cos\gamma\right)^{1/2}} \tag{2.17}$$

where γ is the angle between $\mathbf{x}$ and $\mathbf{x}'$. The symmetry in the variables $\mathbf{x}$ and $\mathbf{x}'$ is obvious in the form (2.17), as is the condition that $G = 0$ if either $\mathbf{x}$ or $\mathbf{x}'$ is on the surface of the sphere.

For solution (1.44) of the Poisson equation we need not only G, but also $\partial G/\partial n'$. Remembering that $\mathbf{n}'$ is the unit normal outward from the volume of interest (i.e., inward along $\mathbf{x}'$ toward the origin), we have

$$\left.\frac{\partial G}{\partial n'}\right|_{x'=a} = -\frac{(x^2 - a^2)}{a(x^2 + a^2 - 2ax \cos\gamma)^{3/2}} \tag{2.18}$$

[Note that this is essentially the induced surface-charge density (2.5).] Hence the solution of the Laplace equation *outside* a sphere with the potential specified on its surface is, according to (1.44),

$$\Phi(\mathbf{x}) = \frac{1}{4\pi} \int \Phi(a, \theta', \phi') \frac{a(x^2 - a^2)}{(x^2 + a^2 - 2ax \cos\gamma)^{3/2}} \, d\Omega' \tag{2.19}$$

where $d\Omega'$ is the element of solid angle at the point (a, θ', ϕ') and $\cos\gamma = \cos\theta \cos\theta' + \sin\theta \sin\theta' \cos(\phi - \phi')$. For the *interior* problem, the normal derivative is radially outward, so that the sign of $\partial G/\partial n'$ is opposite to (2.18). This is equivalent to replacing the factor $(x^2 - a^2)$ by $(a^2 - x^2)$ in (2.19). For a problem with a charge distribution, we must add to (2.19) the appropriate integral in (1.44), with the Green function (2.17).

2.7 Conducting Sphere with Hemispheres at Different Potentials

As an example of the solution (2.19) for the potential outside a sphere with prescribed values of potential on its surface, we consider the conducting sphere of radius a made up of two hemispherical shells separated by a small insulating ring. The hemispheres are kept at different potentials. It will suffice to consider the potentials as $\pm V$, since arbitrary potentials can be handled by superposition of the solution for a sphere at fixed potential over its whole surface. The insulating ring lies in the $z = 0$ plane, as shown in Fig. 2.8, with the upper (lower) hemisphere at potential $+V$ $(-V)$.

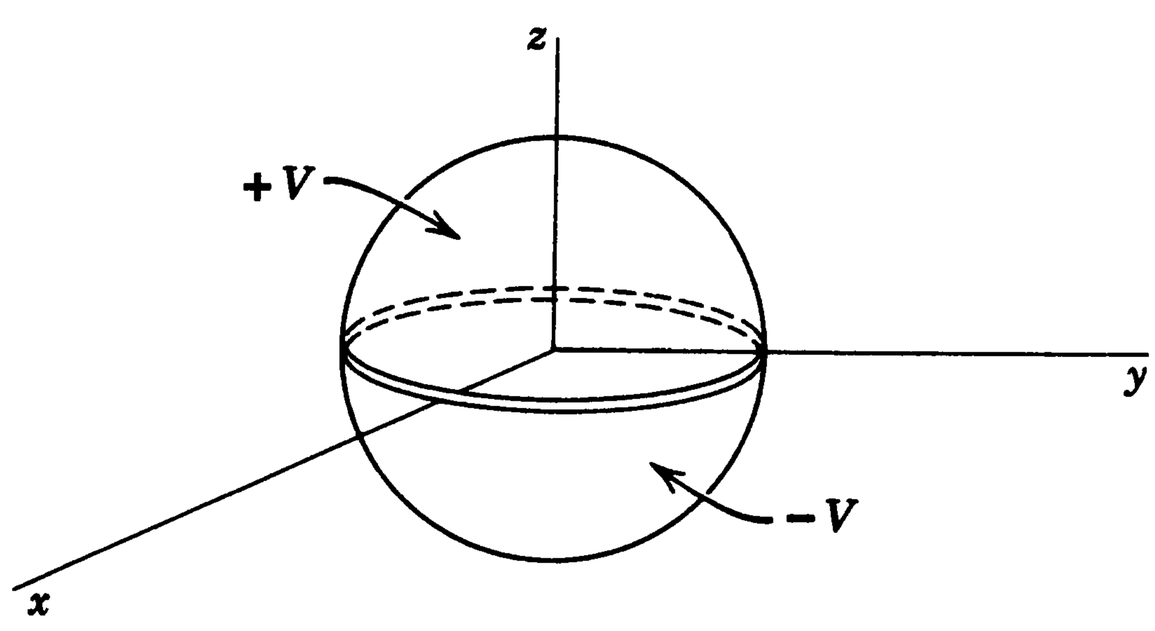

Figure 2.8

From (2.19) the solution for $\Phi(x, \theta, \phi)$ is given by the integral:

$$\Phi(x, \theta, \phi) = \frac{V}{4\pi}\int_0^{2\pi} d\phi' \left\{ \int_0^1 d(\cos\theta') - \int_{-1}^0 d(\cos\theta') \right\} \frac{a(x^2 - a^2)}{(a^2 + x^2 - 2ax\cos\gamma)^{3/2}} \tag{2.20}$$

By a suitable change of variables in the second integral ($\theta' \to \pi - \theta'$, $\phi' \to \phi' + \pi$), this can be cast in the form:

$$\Phi(x, \theta, \phi) = \frac{Va(x^2 - a^2)}{4\pi}\int_0^{2\pi} d\phi' \int_0^1 d(\cos\theta')[(a^2 + x^2 - 2ax\cos\gamma)^{-3/2} - (a^2 + x^2 + 2ax\cos\gamma)^{-3/2}] \tag{2.21}$$

Because of the complicated dependence of $\cos\gamma$ on the angles (θ', ϕ') and (θ, ϕ), equation (2.21) cannot in general be integrated in closed form.

As a special case we consider the potential on the positive z axis. Then $\cos\gamma = \cos\theta'$, since $\theta = 0$. The integration is elementary, and the potential can be shown to be

$$\Phi(z) = V\left[1 - \frac{(z^2 - a^2)}{z\sqrt{z^2 + a^2}}\right] \tag{2.22}$$

At $z = a$, this reduces to $\Phi = V$ as required, while at large distances it goes asymptotically as $\Phi \simeq 3Va^2/2z^2$.

In the absence of a closed expression for the integrals in (2.21), we can expand the denominator in power series and integrate term by term. Factoring out $(a^2 + x^2)$ from each denominator, we obtain

$$\Phi(x, \theta, \phi) = \frac{Va(x^2 - a^2)}{4\pi(x^2 + a^2)^{3/2}}\int_0^{2\pi} d\phi' \int_0^1 d(\cos\theta')[(1 - 2\alpha\cos\gamma)^{-3/2} - (1 + 2\alpha\cos\gamma)^{-3/2}] \tag{2.23}$$

where $\alpha = ax/(a^2 + x^2)$. We observe that in the expansion of the radicals only odd powers of $\alpha\cos\gamma$ will appear:

$$[(1 - 2\alpha\cos\gamma)^{-3/2} - (1 + 2\alpha\cos\gamma)^{-3/2}] = 6\alpha\cos\gamma + 35\alpha^3\cos^3\gamma + \cdots \tag{2.24}$$

It is now necessary to integrate odd powers of $\cos\gamma$ over $d\phi'\, d(\cos\theta')$:

$$\left.\begin{aligned} \int_0^{2\pi} d\phi' \int_0^1 d(\cos\theta')\cos\gamma &= \pi\cos\theta \\ \int_0^{2\pi} d\phi' \int_0^1 d(\cos\theta')\cos^3\gamma &= \frac{\pi}{4}\cos\theta(3 - \cos^2\theta) \end{aligned}\right\} \tag{2.25}$$

If (2.24) and (2.25) are inserted into (2.23), the potential becomes

$$\Phi(x, \theta, \phi) = \frac{3Va^2}{2x^2}\left(\frac{x^3(x^2 - a^2)}{(x^2 + a^2)^{5/2}}\right)\cos\theta\left[1 + \frac{35}{24}\frac{a^2x^2}{(a^2 + x^2)^2}(3 - \cos^2\theta) + \cdots\right] \tag{2.26}$$

We note that only odd powers of $\cos\theta$ appear, as required by the symmetry of the problem. If the expansion parameter is (a^2/x^2), rather than α^2, the series takes on the form:

$$\Phi(x, \theta, \phi) = \frac{3Va^2}{2x^2}\left[\cos\theta - \frac{7a^2}{12x^2}\left(\frac{5}{2}\cos^3\theta - \frac{3}{2}\cos\theta\right) + \cdots\right] \tag{2.27}$$

For large values of x/a this expansion converges rapidly and so is a useful representation for the potential. Even for $x/a = 5$, the second term in the series is only of the order of 2%. It is easily verified that, for $\cos\theta = 1$, expression (2.27) agrees with the expansion of (2.22) for the potential on the axis. [The particular choice of angular factors in (2.27) is dictated by the definitions of the Legendre polynomials. The two factors are, in fact, $P_1(\cos\theta)$ and $P_3(\cos\theta)$, and the expansion of the potential is one in Legendre polynomials of odd order. We establish this in a systematic fashion in Section 3.3.] Further consideration of both the exterior and interior problem of the two hemispheres is found in Problem 2.22.

2.8 *Orthogonal Functions and Expansions*

The representation of solutions of potential problems (or any mathematical physics problem) by expansions in orthogonal functions forms a powerful technique that can be used in a large class of problems. The particular orthogonal set chosen depends on the symmetries or near symmetries involved. To recall the general properties of orthogonal functions and expansions in terms of them, we consider an interval (a, b) in a variable ξ with a set of real or complex functions $U_n(\xi)$, $n = 1, 2, \ldots$, square integrable and orthogonal on the interval (a, b). The orthogonality condition on the functions $U_n(\xi)$ is expressed by

$$\int_a^b U_n^*(\xi)U_m(\xi)\, d\xi = 0, \qquad m \neq n \tag{2.28}$$

If $n = m$, the integral is nonzero. We assume that the functions are normalized so that the integral is unity. Then the functions are said to be *orthonormal*, and they satisfy

$$\int_a^b U_n^*(\xi)U_m(\xi)\, d\xi = \delta_{nm} \tag{2.29}$$

An arbitrary function $f(\xi)$, square integrable on the interval (a, b), can be expanded in a series of the orthonormal functions $U_n(\xi)$. If the number of terms in the series is finite (say N),

$$f(\xi) \leftrightarrow \sum_{n=1}^{N} a_n U_n(\xi) \tag{2.30}$$

then we can ask for the "best" choice of coefficients a_n so that we get the "best" representation of the function $f(\xi)$. If "best" is defined as minimizing the mean square error M_N:

$$M_N = \int_a^b \left| f(\xi) - \sum_{n=1}^{N} a_n U_n(\xi) \right|^2 d\xi \tag{2.31}$$

it is easy to show that the coefficients are given by

$$a_n = \int_a^b U_n^*(\xi) f(\xi)\, d\xi \tag{2.32}$$

where the orthonormality condition (2.29) has been used. This is the standard result for the coefficients in an orthonormal function expansion.

If the number of terms N in series (2.30) is taken larger and larger, we intuitively expect that our series representation of $f(\xi)$ is "better" and "better." Our intuition will be correct provided the set of orthonormal functions is *complete*, completeness being defined by the requirement that there exist a finite number N_0 such that for $N > N_0$ the mean square error M_N can be made smaller than any arbitrarily small positive quantity. Then the series representation

$$\sum_{n=1}^{\infty} a_n U_n(\xi) = f(\xi) \tag{2.33}$$

with a_n given by (2.32) is said to *converge in the mean* to $f(\xi)$. Physicists generally leave the difficult job of proving completeness of a given set of functions to the mathematicians. All orthonormal sets of functions normally occurring in mathematical physics have been proven to be complete.

Series (2.33) can be rewritten with the explicit form (2.32) for the coefficients a_n:

$$f(\xi) = \int_a^b \left\{ \sum_{n=1}^{\infty} U_n^*(\xi') U_n(\xi) \right\} f(\xi')\, d\xi' \tag{2.34}$$

Since this represents any function $f(\xi)$ on the interval (a, b), it is clear that the sum of bilinear terms $U_n^*(\xi') U_n(\xi)$ must exist only in the neighborhood of $\xi' = \xi$. In fact, it must be true that

$$\sum_{n=1}^{\infty} U_n^*(\xi') U_n(\xi) = \delta(\xi' - \xi) \tag{2.35}$$

This is the so-called *completeness* or *closure relation*. It is analogous to the orthonormality condition (2.29), except that the roles of the continuous variable ξ and the discrete index n have been interchanged.

The most famous orthogonal functions are the sines and cosines, an expansion in terms of them being a *Fourier series*. If the interval in x is $(-a/2, a/2)$, the orthonormal functions are

$$\sqrt{\frac{2}{a}} \sin\left(\frac{2\pi m x}{a}\right), \qquad \sqrt{\frac{2}{a}} \cos\left(\frac{2\pi m x}{a}\right)$$

where m is a non-negative integer and for $m = 0$ the cosine function is $1/\sqrt{a}$. The series equivalent to (2.33) is customarily written in the form:

$$f(x) = \tfrac{1}{2} A_0 + \sum_{m=1}^{\infty} \left[A_m \cos\left(\frac{2\pi m x}{a}\right) + B_m \sin\left(\frac{2\pi m x}{a}\right) \right] \tag{2.36}$$

where

$$\begin{aligned} A_m &= \frac{2}{a} \int_{-a/2}^{a/2} f(x) \cos\left(\frac{2\pi m x}{a}\right) dx \\ B_m &= \frac{2}{a} \int_{-a/2}^{a/2} f(x) \sin\left(\frac{2\pi m x}{a}\right) dx \end{aligned} \tag{2.37}$$

If the interval spanned by the orthonormal set has more than one dimension, formulas (2.28)–(2.33) have obvious generalizations. Suppose that the space is two-dimensional, and the variable ξ ranges over the interval (a, b) while the variable η has the interval (c, d). The orthonormal functions in each dimension are $U_n(\xi)$ and $V_m(\eta)$. Then the expansion of an arbitrary function $f(\xi, \eta)$ is

$$f(\xi, \eta) = \sum_n \sum_m a_{nm} U_n(\xi) V_m(\eta) \tag{2.38}$$

where

$$a_{nm} = \int_a^b d\xi \int_c^d d\eta U_n^*(\xi) V_m^*(\eta) f(\xi, \eta) \tag{2.39}$$

If the interval (a, b) becomes infinite, the set of orthogonal functions $U_n(\xi)$ may become a continuum of functions, rather than a denumerable set. Then the Kronecker delta symbol in (2.29) becomes a Dirac delta function. An important example is the *Fourier integral.* Start with the orthonormal set of complex exponentials,

$$U_m(x) = \frac{1}{\sqrt{a}} e^{i(2\pi m x/a)} \tag{2.40}$$

$m = 0, \pm 1, \pm 2, \ldots$, on the interval $(-a/2, a/2)$, with the expansion:

$$f(x) = \frac{1}{\sqrt{a}} \sum_{m=-\infty}^{\infty} A_m e^{i(2\pi m x/a)} \tag{2.41}$$

where

$$A_m = \frac{1}{\sqrt{a}} \int_{-a/2}^{a/2} e^{-i(2\pi m x'/a)} f(x')\, dx' \tag{2.42}$$

Then let the interval become infinite ($a \to \infty$), at the same time transforming

$$\left.\begin{aligned} &\frac{2\pi m}{a} \to k \\ &\sum_m \to \int_{-\infty}^{\infty} dm = \frac{a}{2\pi} \int_{-\infty}^{\infty} dk \\ &A_m \to \sqrt{\frac{2\pi}{a}}\, A(k) \end{aligned}\right\} \tag{2.43}$$

The resulting expansion, equivalent to (2.41), is the *Fourier integral*,

$$f(x) = \frac{1}{\sqrt{2\pi}} \int_{-\infty}^{\infty} A(k) e^{ikx}\, dk \tag{2.44}$$

where

$$A(k) = \frac{1}{\sqrt{2\pi}} \int_{-\infty}^{\infty} e^{-ikx} f(x)\, dx \tag{2.45}$$

The orthogonality condition is

$$\frac{1}{2\pi} \int_{-\infty}^{\infty} e^{i(k-k')x}\, dx = \delta(k - k') \tag{2.46}$$

while the completeness relation is

$$\frac{1}{2\pi}\int_{-\infty}^{\infty} e^{ik(x-x')}\,dk = \delta(x - x') \tag{2.47}$$

These last integrals serve as convenient representations of a delta function. We note in (2.44)–(2.47) the complete equivalence of the two continuous variables x and k.

2.9 *Separation of Variables; Laplace Equation in Rectangular Coordinates*

The partial differential equations of mathematical physics are often solved conveniently by a method called *separation of variables*. In the process, one often generates orthogonal sets of functions that are useful in their own right. Equations involving the three-dimensional Laplacian operator are known to be separable in eleven different coordinate systems (see *Morse and Feshbach*, pp. 509, 655). We discuss only three of these in any detail—rectangular, spherical, and cylindrical—beginning with the simplest, rectangular coordinates.

The Laplace equation in rectangular coordinates is

$$\frac{\partial^2\Phi}{\partial x^2} + \frac{\partial^2\Phi}{\partial y^2} + \frac{\partial^2\Phi}{\partial z^2} = 0 \tag{2.48}$$

A solution of this *partial* differential equation can be found in terms of three *ordinary* differential equations, all of the same form, by the assumption that the potential can be represented by a product of three functions, one for each coordinate:

$$\Phi(x, y, z) = X(x)Y(y)Z(z) \tag{2.49}$$

Substitution into (2.48) and division of the result by (2.49) yields

$$\frac{1}{X(x)}\frac{d^2X}{dx^2} + \frac{1}{Y(y)}\frac{d^2Y}{dy^2} + \frac{1}{Z(z)}\frac{d^2Z}{dz^2} = 0 \tag{2.50}$$

where total derivatives have replaced partial derivatives, since each term involves a function of one variable only. If (2.50) is to hold for arbitrary values of the independent coordinates, each of the three terms must be separately constant:

$$\left.\begin{aligned} \frac{1}{X}\frac{d^2X}{dx^2} &= -\alpha^2 \\ \frac{1}{Y}\frac{d^2Y}{dy^2} &= -\beta^2 \\ \frac{1}{Z}\frac{d^2Z}{dz^2} &= \gamma^2 \end{aligned}\right\} \tag{2.51}$$

where

$$\alpha^2 + \beta^2 = \gamma^2$$

If we arbitrarily choose α^2 and β^2 to be positive, then the solutions of the three ordinary differential equations (2.51) are $e^{\pm i\alpha x}$, $e^{\pm i\beta y}$, $e^{\pm\sqrt{\alpha^2+\beta^2}z}$. The potential (2.49) can thus be built up from the product solutions:

$$\Phi = e^{\pm i\alpha x}e^{\pm i\beta y}e^{\pm\sqrt{\alpha^2+\beta^2}z} \tag{2.52}$$

At this stage α and β are completely arbitrary. Consequently (2.52), by linear superposition, represents a very large class of solutions to the Laplace equation.

To determine α and β it is necessary to impose specific boundary conditions on the potential. As an example, consider a rectangular box, located as shown in Fig. 2.9, with dimensions (a, b, c) in the (x, y, z) directions. All surfaces of the box are kept at zero potential, except the surface $z = c$, which is at a potential $V(x, y)$. It is required to find the potential everywhere inside the box. Starting with the requirement that $\Phi = 0$ for $x = 0$, $y = 0$, $z = 0$, it is easy to see that the required forms of X, Y, Z are

$$\left.\begin{aligned} X &= \sin \alpha x \\ Y &= \sin \beta y \\ Z &= \sinh(\sqrt{\alpha^2 + \beta^2} z) \end{aligned}\right\} \tag{2.53}$$

To have $\Phi = 0$ at $x = a$ and $y = b$, we must have $\alpha a = n\pi$ and $\beta b = m\pi$. With the definitions,

$$\left.\begin{aligned} \alpha_n &= \frac{n\pi}{a} \\ \beta_m &= \frac{m\pi}{b} \\ \gamma_{nm} &= \pi\sqrt{\frac{n^2}{a^2} + \frac{m^2}{b^2}} \end{aligned}\right\} \tag{2.54}$$

we can write the partial potential Φ_{nm}, satisfying all the boundary conditions except one,

$$\Phi_{nm} = \sin(\alpha_n x) \sin(\beta_m y) \sinh(\gamma_{nm} z) \tag{2.55}$$

The potential can be expanded in terms of these Φ_{nm} with initially arbitrary coefficients (to be chosen to satisfy the final boundary condition):

$$\Phi(x, y, z) = \sum_{n,m=1}^{\infty} A_{nm} \sin(\alpha_n x) \sin(\beta_m y) \sinh(\gamma_{nm} z) \tag{2.56}$$

There remains only the boundary condition $\Phi = V(x, y)$ at $z = c$:

$$V(x, y) = \sum_{n,m=1}^{\infty} A_{nm} \sin(\alpha_n x) \sin(\beta_m y) \sinh(\gamma_{nm} c) \tag{2.57}$$

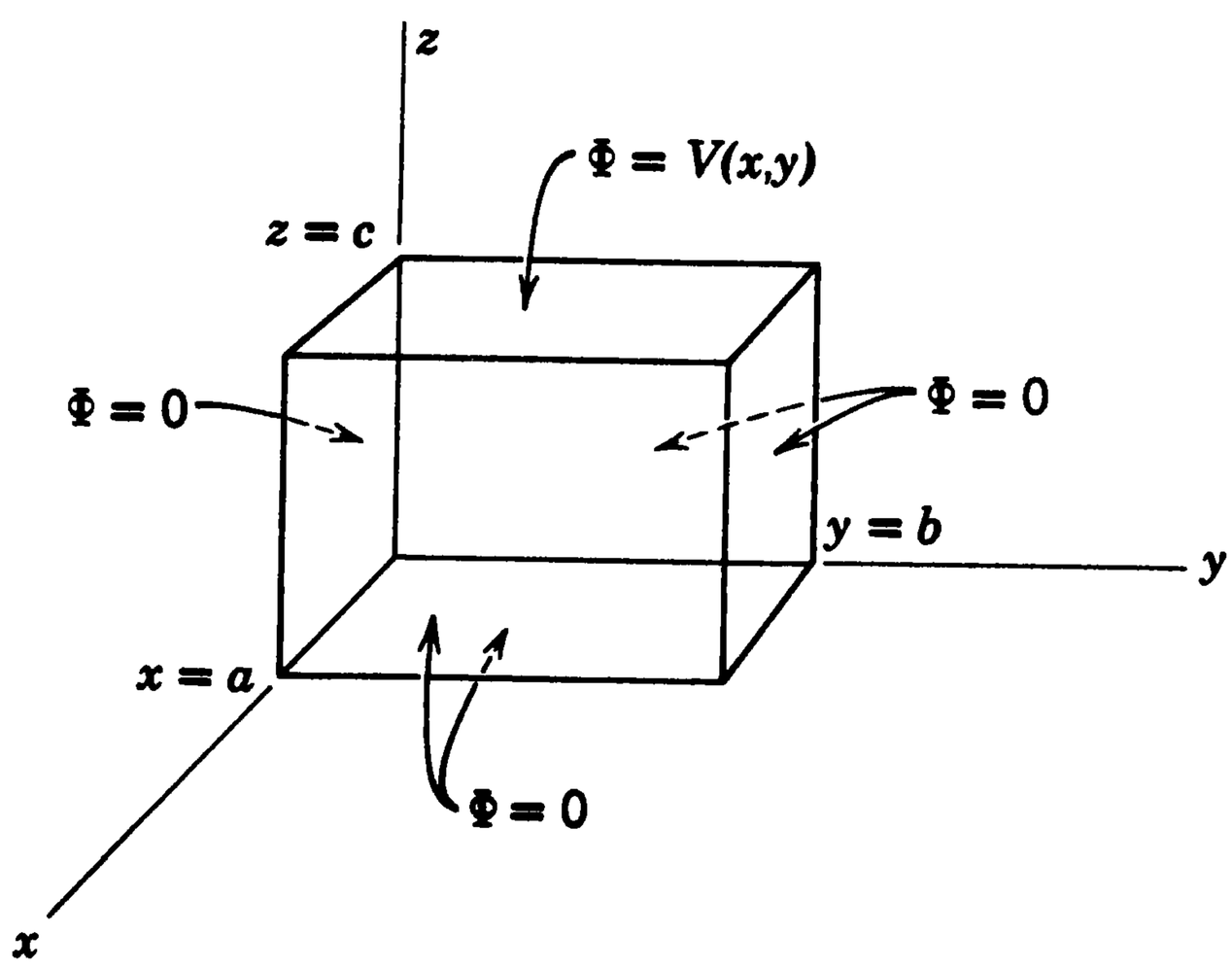

Figure 2.9 Hollow, rectangular box with five sides at zero potential, while the sixth ($z = c$) has the specified potential $\Phi = V(x, y)$.

This is just a double Fourier series for the function $V(x, y)$. Consequently the coefficients A_{nm} are given by:

$$A_{nm} = \frac{4}{ab \sinh(\gamma_{nm}c)} \int_0^a dx \int_0^b dy\ V(x, y) \sin(\alpha_n x) \sin(\beta_m y) \tag{2.58}$$

If the rectangular box has potentials different from zero on all six sides, the required solution for the potential inside the box can be obtained by a linear superposition of six solutions, one for each side, equivalent to (2.56) and (2.58). The problem of the solution of the Poisson equation, that is, the potential inside the box with a charge distribution inside, as well as prescribed boundary conditions on the surface, requires the construction of the appropriate Green function, according to (1.43) and (1.44). Discussion of this topic will be deferred until we have treated the Laplace equation in spherical and cylindrical coordinates. For the moment, we merely note that the solution given by (2.56) and (2.58) is equivalent to the surface integral in the Green function solution (1.44).

2.10 A Two-Dimensional Potential Problem; Summation of a Fourier Series

We now consider briefly the solution by separation of variables of the two-dimensional Laplace equation in Cartesian coordinates. By two-dimensional problems we mean those in which the potential can be assumed to be independent of one of the coordinates, say, z. This is usually only an approximation, but may hold true to high accuracy, as in a long uniform transmission line. If the potential is independent of z, the basic solutions of the previous section reduce to the products

$$e^{\pm i\alpha x} e^{\pm \alpha y}$$

where α is any real or complex constant. The imposition of boundary conditions on the potential will determine what values of α are permitted and the form of the linear superposition of different solutions required.

A simple problem that can be used to demonstrate the separation of variables technique and also to establish connection with the use of complex variables is indicated in Fig. 2.10. The potential in the region, $0 \le x \le a$, $y \le 0$, is desired, subject to the boundary conditions that $\Phi = 0$ at $x = 0$ and $x = a$, while $\Phi = V$ at $y = 0$ for $0 \le x \le a$ and $\Phi \to 0$ for large y. Inspection of the basic solutions shows that α is real and that, to have the potential vanish at $x = 0$ and $x = a$ for all y and as $y \to \infty$, the proper linear combinations are $e^{-\alpha y} \sin(\alpha x)$ with $\alpha = n\pi/a$. The linear combination of solutions satisfying the boundary conditions on three of the four boundary surfaces is thus

$$\Phi(x, y) = \sum_{n=1}^{\infty} A_n \exp(-n\pi y/a) \sin(n\pi x/a) \tag{2.59}$$

The coefficients A_n are determined by the requirement that $\Phi = V$ for $y = 0$, $0 \le x \le a$. As discussed in Section 2.8, the Fourier coefficients are

$$A_n = \frac{2}{a} \int_0^a \Phi(x, 0) \sin(n\pi x/a)\, dx \tag{2.60}$$

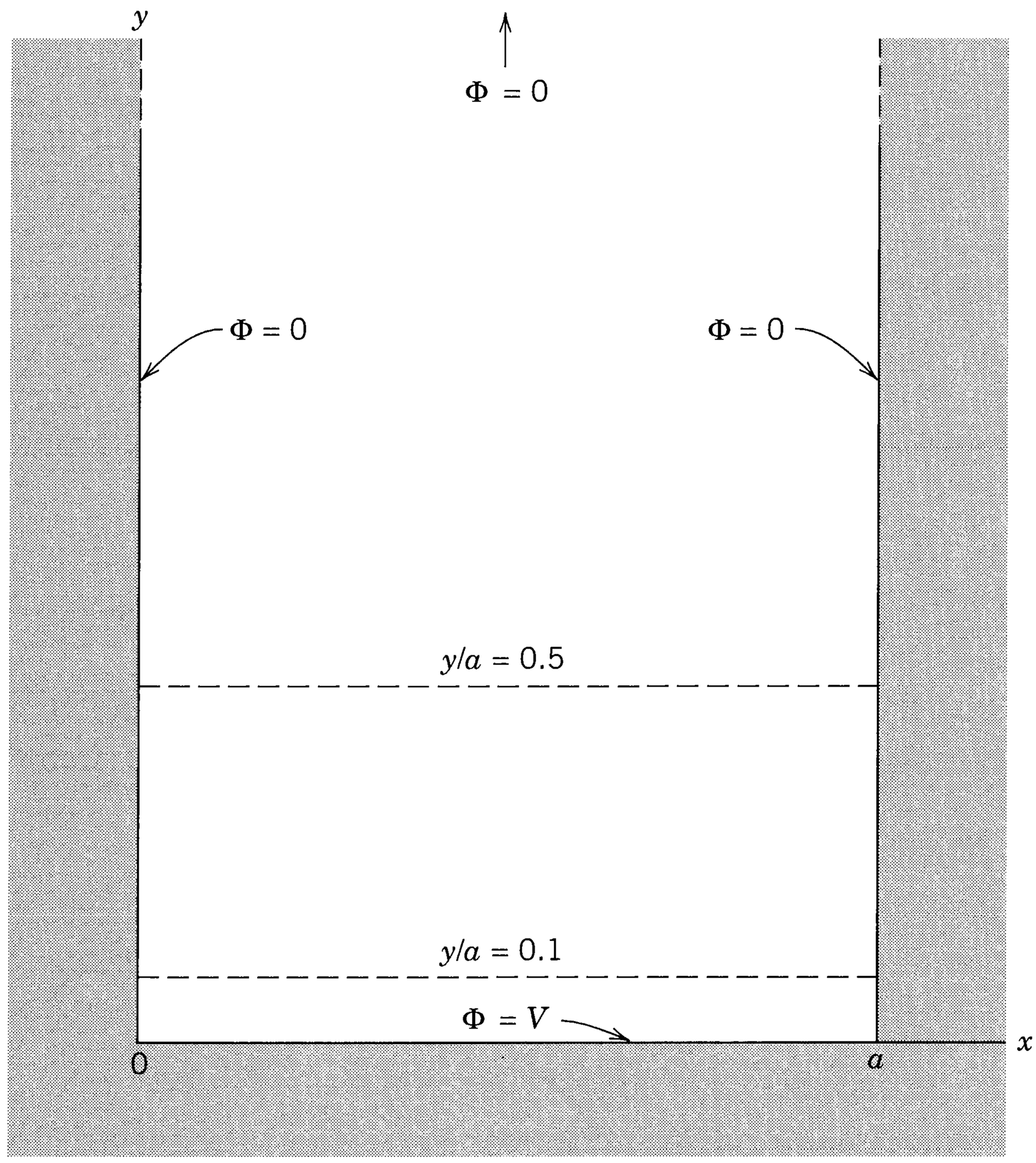

Figure 2.10 Two-dimensional potential problem.

With $\Phi(x, 0) = V$, one finds

$$A_n = \frac{4V}{\pi n}\begin{cases} 1 & \text{for } n \text{ odd} \\ 0 & \text{for } n \text{ even} \end{cases}$$

The potential $\Phi(x, y)$ is therefore determined to be

$$\Phi(x, y) = \frac{4V}{\pi} \sum_{n \text{ odd}} \frac{1}{n} \exp(-n\pi y/a) \sin(n\pi x/a) \tag{2.61}$$

For small values of y many terms in the series are necessary to give an accurate approximation, but for $y \gtrsim a/\pi$ it is evident that only the first few terms are appreciable. The potential rapidly approaches its asymptotic form given by the first term,

$$\Phi(x, y) \to \frac{4V}{\pi} \exp(-\pi y/a) \sin(\pi x/a) \tag{2.62}$$

Parenthetically, we remark that this general behavior is characteristic of all boundary-value problems of this type, independently of whether $\Phi(x, 0)$ is a constant, provided the first term in the series is nonvanishing. The coefficient A_1 (2.60) will be different, but the smooth behavior in x of the asymptotic solution sets in for $y \gtrsim a$, regardless of the complexities of $\Phi(x, 0)$. This is shown quantitatively for the present example in Fig. 2.11 where the potential along the two dashed lines, $y/a = 0.1, 0.5$, of Fig. 2.10 is plotted. The solid curves are the exact potential, the dotted, the first term (2.62). Close to the boundary ($y/a = 0.1$) the curves differ appreciably, but for $y/a = 0.5$ the asymptotic form is already an excellent approximation.

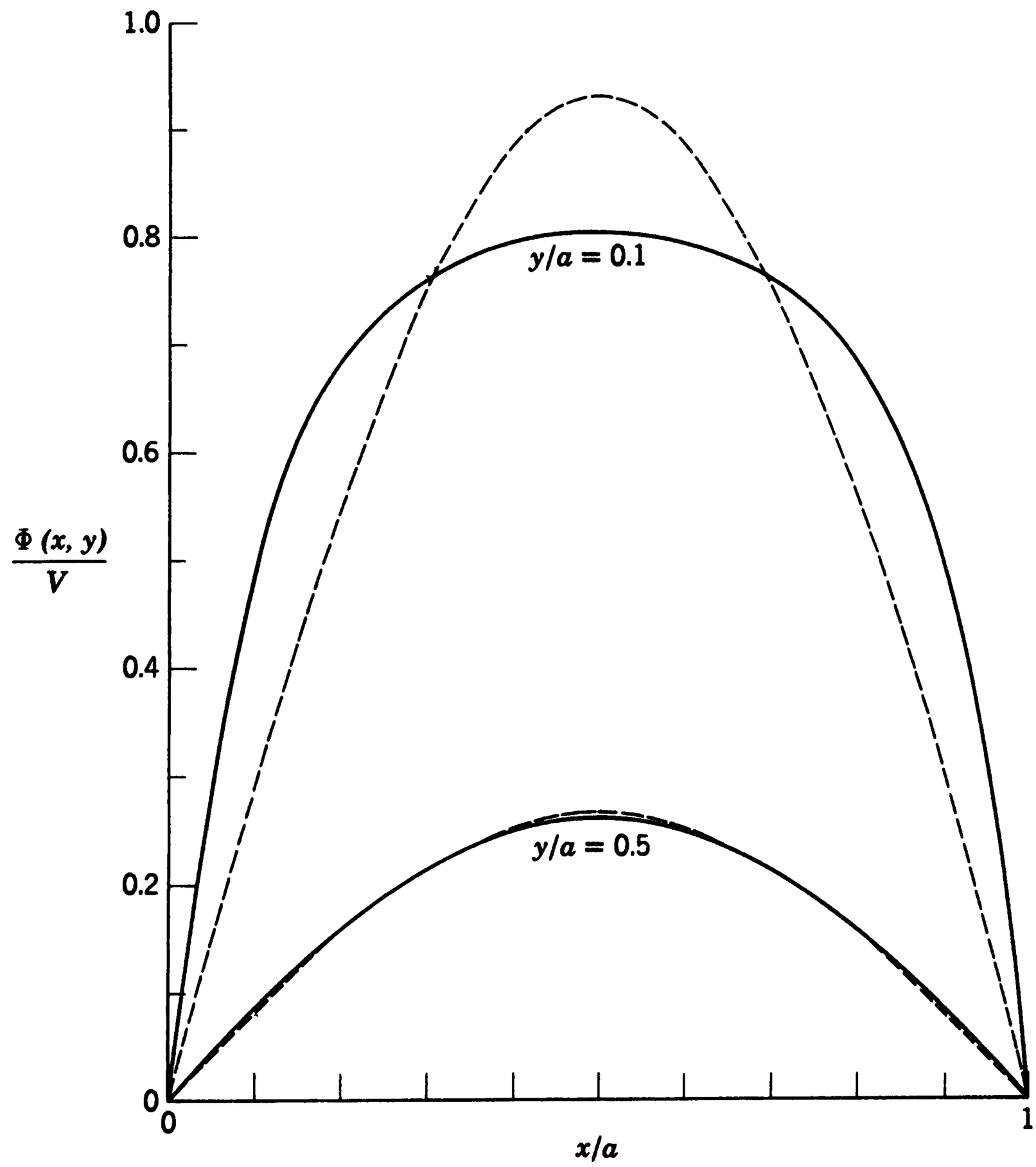

Figure 2.11 Potentials at $y/a = 0.1, 0.5$ (along the dashed lines of Fig. 2.10) as functions of x/a. The solid curves are the exact solution; the dashed curves are the first term in the series solution (2.61).

There are many Fourier series that can be summed to give an answer in closed form. The series in (2.61) is one of them. We proceed as follows. Observing that $\sin\theta = \mathrm{Im}(e^{i\theta})$, where Im stands for the imaginary part, we see that (2.61) can be written as

$$\Phi(x, y) = \frac{4V}{\pi}\,\mathrm{Im}\sum_{n\ \mathrm{odd}} \frac{1}{n}\, e^{(in\pi/a)(x+iy)}$$

With the definition,

$$Z = e^{(i\pi/a)(x+iy)} \tag{2.63}$$

this can be put in the suggestive form,

$$\Phi(x, y) = \frac{4V}{\pi}\,\mathrm{Im}\sum_{n\ \mathrm{odd}} \frac{Z^n}{n}$$

At this point we can perhaps recall the expansion,*

$$\ln(1 + Z) = Z - \tfrac{1}{2}Z^2 + \tfrac{1}{3}Z^3 - \tfrac{1}{4}Z^4 + \cdots$$

*Alternatively, we observe that $(d/dZ)(\Sigma_{n=1}^{\infty} Z^n/n) = \Sigma_{n=0}^{\infty} Z^n = 1/(1 - Z)$. Integration then gives $\Sigma_{n=1}^{\infty} Z^n/n = -\ln(1 - Z)$.

Evidently,

$$\sum_{n \text{ odd}} \frac{Z^n}{n} = \frac{1}{2} \ln\left(\frac{1 + Z}{1 - Z}\right)$$

and

$$\Phi(x, y) = \frac{2V}{\pi} \operatorname{Im}\left[\ln\left(\frac{1 + Z}{1 - Z}\right)\right] \tag{2.64}$$

Since the imaginary part of a logarithm is equal to the phase of its argument, we consider

$$\frac{1 + Z}{1 - Z} = \frac{(1 + Z)(1 - Z^*)}{|1 - Z|^2} = \frac{1 - |Z|^2 + 2i \operatorname{Im} Z}{|1 - Z|^2}$$

The phase of the argument of the logarithm is thus $\tan^{-1}[2 \operatorname{Im} Z/(1 - |Z|^2)]$. With the explicit form (2.63) of Z substituted, it is found that the potential becomes

$$\Phi(x, y) = \frac{2V}{\pi} \tan^{-1}\left(\frac{\sin \dfrac{\pi x}{a}}{\sinh \dfrac{\pi y}{a}}\right) \tag{2.65}$$

The branch of the tangent curve corresponds to the angle lying between 0 and $\pi/2$. The infinite series (2.61) has been transformed into the explicit closed form (2.65). The reader may verify that the boundary conditions are satisfied and that the asymptotic form (2.62) emerges in a simple manner.

The potential (2.64) with Z given by (2.63) is obviously related to functions of a complex variable. This connection is a direct consequence of the fact that the real or the imaginary part of an analytic function satisfies the Laplace equation in two dimensions as a result of the Cauchy–Riemann equations. As mentioned at the beginning of the chapter, we omit discussion of the complex-variable technique, not because it is unimportant but for lack of space and because completely adequate discussions exist elsewhere. Some of these sources are listed at the end of the chapter. The methods of summation of Fourier series, with many examples, are described in *Collin* (Appendix A.6).

2.11 Fields and Charge Densities in Two-Dimensional Corners and Along Edges

In many practical situations conducting surfaces come together in a way that can be approximated, on the small scale at least, as the intersection of two planes. The edges of the box shown in Fig. 2.9 are one example, the corners at $x = 0$, $y = 0$ and $x = a$, $y = 0$ in Fig. 2.10 another. It is useful therefore to have an understanding of how the potential fields, and the surface-charge densities behave in the neighborhood of such sharp "corners" or edges. To be able to look at them closely enough to have the behavior of the fields determined in functional form solely by the properties of the "corner" and not by the details of the overall configuration, we assume that the "corners" are infinitely sharp.

The general situation in two dimensions is shown in Fig. 2.12. Two conducting planes intersect at an angle β. The planes are assumed to be held at potential V. Remote from the origin and not shown in the figure are other conductors or possibly configurations of charges that specify the potential problem uniquely. Since we are interested in the functional behavior of the fields, etc. near the origin, but not in the absolute magnitudes, we leave the "far away" behavior unspecified as much as possible.

The geometry of Fig. 2.12 suggests use of polar rather than Cartesian coordinates. In terms of the polar coordinates (ρ, ϕ), the Laplace equation in two dimensions is

$$\frac{1}{\rho}\frac{\partial}{\partial\rho}\left(\rho\frac{\partial\Phi}{\partial\rho}\right) + \frac{1}{\rho^2}\frac{\partial^2\Phi}{\partial\phi^2} = 0 \tag{2.66}$$

Using the separation of variables approach, we substitute

$$\Phi(\rho, \phi) = R(\rho)\Psi(\phi)$$

This leads, upon multiplication by ρ^2/Φ, to

$$\frac{\rho}{R}\frac{d}{d\rho}\left(\rho\frac{dR}{d\rho}\right) + \frac{1}{\Psi}\frac{d^2\Psi}{d\phi^2} = 0 \tag{2.67}$$

Since the two terms are separately functions of ρ and ϕ respectively, each one must be constant:

$$\frac{\rho}{R}\frac{d}{d\rho}\left(\rho\frac{dR}{d\rho}\right) = \nu^2, \qquad \frac{1}{\Psi}\frac{d^2\Psi}{d\phi^2} = -\nu^2 \tag{2.68}$$

The solutions to these equations are

$$\left.\begin{aligned} R(\rho) &= a\rho^{\nu} + b\rho^{-\nu} \\ \Psi(\phi) &= A\cos(\nu\phi) + B\sin(\nu\phi) \end{aligned}\right\} \tag{2.69}$$

For the special circumstance of $\nu = 0$, the solutions are

$$\left.\begin{aligned} R(\rho) &= a_0 + b_0 \ln\rho \\ \Psi(\phi) &= A_0 + B_0\phi \end{aligned}\right\} \tag{2.70}$$

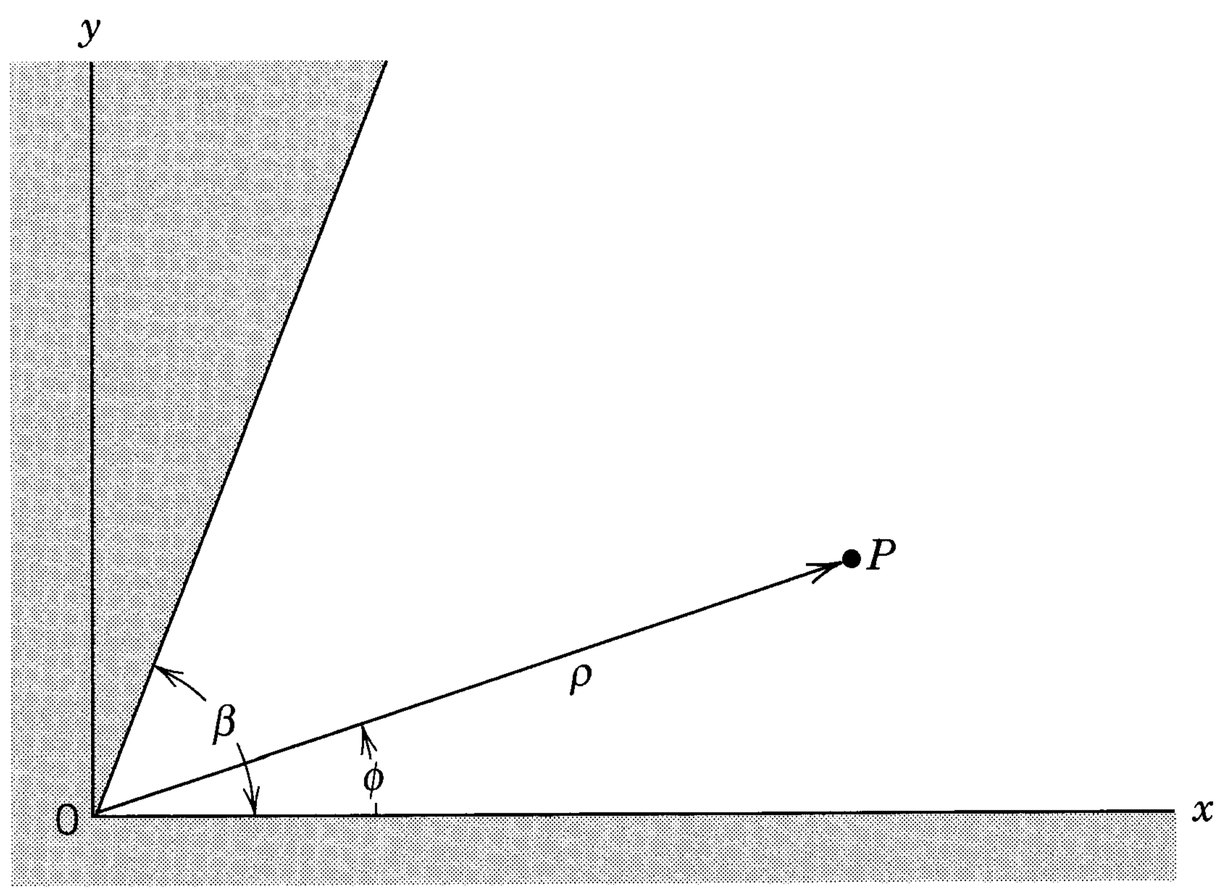

Figure 2.12 Intersection of two conducting planes defining a corner in two dimensions with opening angle β.

These are the building blocks with which we construct the potential by linear superposition.

Although not central to our present purpose, we note the general solution of the Laplace equation in two dimensions when the full azimuthal range is permitted as, for example, for the potential between two cylindrical surfaces, $\rho = a$ and $\rho = b$, on which the potential is given as a function of ϕ. If there is no restriction on ϕ, it is necessary that ν be a positive or negative integer or zero to ensure that the potential is single-valued. Furthermore, for $\nu = 0$, the constant B_0 in (2.70) must vanish for the same reason. The general solution is therefore of the form,

$$\begin{aligned}\Phi(\rho, \phi) = a_0 + b_0 \ln \rho + \sum_{n=1}^{\infty} a_n \rho^n \sin(n\phi + \alpha_n) \\ + \sum_{n=1}^{\infty} b_n \rho^{-n} \sin(n\phi + \beta_n)\end{aligned} \tag{2.71}$$

If the origin is included in the volume in which there is no charge, all the b_n are zero. Only a constant and positive powers of ρ appear. If the origin is excluded, the b_n can be different from zero. In particular, the logarithmic term is equivalent to a line charge on the axis with charge density per unit length $\lambda = -2\pi\epsilon_0 b_0$, as is well known.

For the situation of Fig. 2.12 the azimuthal angle is restricted to the range $0 \le \phi \le \beta$. The boundary conditions are that $\Phi = V$ for all $\rho \ge 0$ when $\phi = 0$ and $\phi = \beta$. This requires that $b_0 = B_0 = 0$ in (2.70) and $b = 0$ and $A = 0$ in (2.69). Furthermore, it requires that ν be chosen to make $\sin(\nu\beta) = 0$. Hence

$$\nu = \frac{m\pi}{\beta}, \qquad m = 1, 2, \ldots$$

and the general solution becomes

$$\Phi(\rho, \phi) = V + \sum_{m=1}^{\infty} a_m \rho^{m\pi/\beta} \sin(m\pi\phi/\beta) \tag{2.72}$$

The still undetermined coefficients a_m depend on the potential remote from the corner at $\rho = 0$. Since the series involves positive powers of $\rho^{\pi/\beta}$, for small enough ρ only the first term in the series will be important.* Thus, *near* $\rho = 0$, the potential is approximately

$$\Phi(\rho, \phi) \simeq V + a_1 \rho^{\pi/\beta} \sin(\pi\phi/\beta) \tag{2.73}$$

The electric field components are

$$\left.\begin{aligned} E_\rho(\rho, \phi) &= -\frac{\partial \Phi}{\partial \rho} \simeq -\frac{\pi a_1}{\beta} \rho^{(\pi/\beta)-1} \sin(\pi\phi/\beta) \\ E_\phi(\rho, \phi) &= -\frac{1}{\rho}\frac{\partial \Phi}{\partial \phi} \simeq -\frac{\pi a_1}{\beta} \rho^{(\pi/\beta)-1} \cos(\pi\phi/\beta) \end{aligned}\right\} \tag{2.74}$$

*Here we make a necessary assumption about the remote boundary conditions, namely, that they are such that the coefficient a_1 is not zero. Ordinarily this is of no concern, but special symmetries might make a_1, or even a_2, etc., vanish. These unusual examples must be treated separately.

The surface-charge densities at $\phi = 0$ and $\phi = \beta$ are equal and are approximately

$$\sigma(\rho) = \epsilon_0 E_\phi(\rho, 0) \simeq -\frac{\epsilon_0 \pi a_1}{\beta} \rho^{(\pi/\beta)-1} \tag{2.75}$$

The components of the field and the surface-charge density near $\rho = 0$ all vary with distance as $\rho^{(\pi/\beta)-1}$. This dependence on ρ is shown for some special cases in Fig. 2.13. For a very deep corner (small β) the power of ρ becomes very large. Essentially no charge accumulates in such a corner. For $\beta = \pi$ (a flat surface), the field quantities become independent of ρ, as is intuitively obvious. When $\beta > \pi$, the two-dimensional corner becomes an edge and the field and the surface-charge density become singular as $\rho \to 0$. For $\beta = 2\pi$ (the edge of a thin sheet) the singularity is as $\rho^{-1/2}$. This is still integrable so that the charge within a finite distance from the edge is finite, but it implies that field strengths become very large at the edges of conducting sheets (or, in fact, for any configuration where $\beta > \pi$).

The preceding two-dimensional electrostatic considerations apply to many three-dimensional situations, even with time-varying fields. If the edge is a sharp edge of finite length, as the edge of a cube away from a corner, then sufficiently close to the edge the variation of the potential along the edge can be ignored. The two-dimensional considerations apply, although the coefficient a_1 in (2.75) may vary with distance along the edge. Similarly, the electrostatic arguments are valid even for time-varying fields. The point here is that with time dependence another length enters, namely, the wavelength. Provided one is concerned with distances away from the edge that are small compared to a wavelength, as well as other relevant distances, the behavior of the fields reduces to electrostatic or magnetostatic behavior. In the diffraction of microwaves by a hole in a thin conducting sheet, for example, the fields are singular as $\rho^{-1/2}$ as $\rho \to 0$, where ρ is the distance from the boundary of the hole, and this fact must be taken into account in any exact solution of the diffraction problem.

The singular behavior of the fields near sharp edges is the reason for the effectiveness of lightning rods. In the idealized situation discussed here the field strength increases without limit as $\rho \to 0$, but for a thin sheet of thickness d with a smoothly rounded edge it can be inferred that the field strength at the surface will be proportional to $d^{-1/2}$. For small enough d this can be very large. In absolute vacuum such field strengths are possible; in air, however, electrical breakdown and a discharge will occur if the field strength exceeds a certain value (depending on the exact shape of the electrode, its proximity to the other elec-

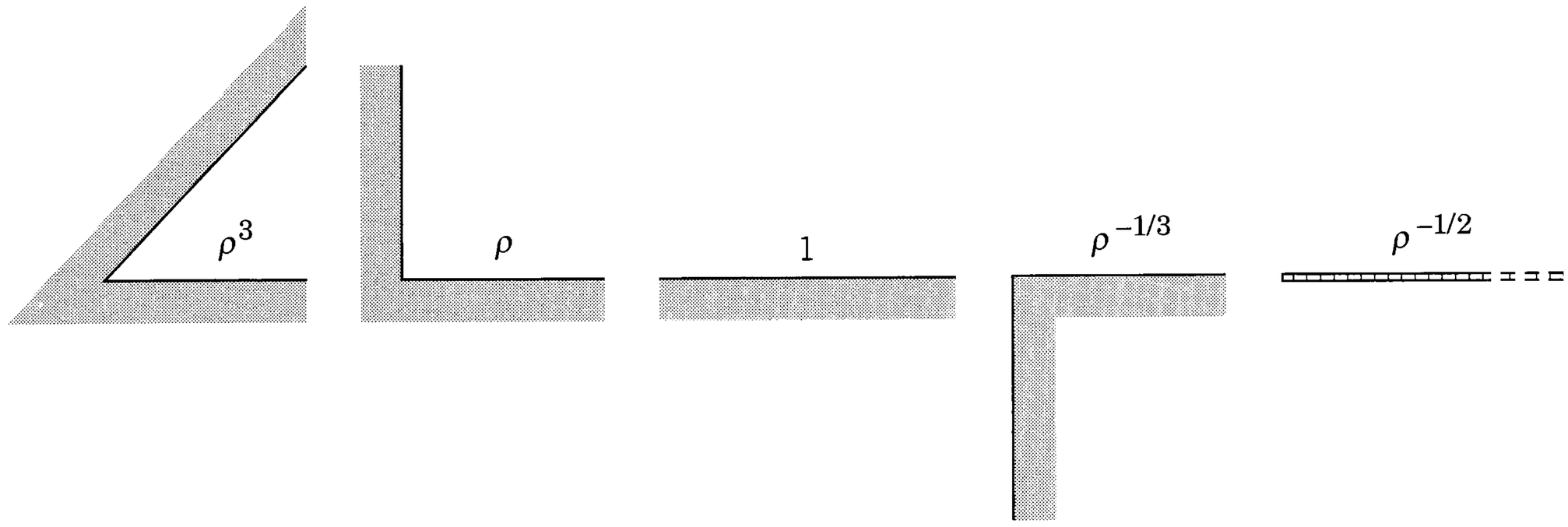

Figure 2.13 Variation of the surface-charge density (and the electric field) with distance ρ from the "corner" or edge for opening angles $\beta = \pi/4$, $\pi/2$, π, $3\pi/2$, and 2π.

trodes, etc., but greater than about 2.5×10^6 V/m for air at normal temperature and pressure (NTP), sometimes by a factor of 4). In thunderstorms, with large potential differences between the ground and the thunderclouds, a grounded sharp conducting edge, or better, a point (see Section 3.4), will have breakdown occur around it first and will then provide one end of the jagged conducting path through the air along which the lightning discharge travels.

2.12 *Introduction to Finite Element Analysis for Electrostatics*

Finite element analysis (FEA) encompasses a variety of numerical approaches for the solution of boundary-value problems in physics and engineering. Here we sketch only an introduction to the essential ideas, using Galerkin's method for two-dimensional electrostatics as an illustration. The generalization to three dimensions is mentioned briefly at the end. The reader who wishes a deeper introduction may consult *Binns, Lawrenson, and Trowbridge, Ida and Bastos, Sadiku, Strang*, or *Zhou.*

Consider the Poisson equation, $\nabla^2\psi = -g$ in a two-dimensional region R, with Dirichlet boundary conditions on the boundary curve C. We construct the vanishing integral,

$$\int_R [\phi\, \nabla^2\psi + g\phi]\, dx\, dy = 0 \tag{2.76}$$

where $\phi(x, y)$ is a test function specified for the moment only as piecewise continuous in R and vanishing on C. Use of Green's first identity on the first term above leads to

$$\int_R [\nabla\phi \cdot \nabla\psi - g\phi]\, dx\, dy = 0 \tag{2.77}$$

The surface integral vanishes because ϕ vanishes on C. Galerkin's method consists first of approximating the desired solution $\psi(x, y)$ by a finite expansion in terms of a set of localized, linearly independent functions, $\phi_{ij}(x, y)$, with support only in a finite neighborhood of $x = x_i$, $y = y_j$. For definiteness, we imagine the region R spanned by a square lattice with lattice spacing h. Then a possible choice for $\phi_{ij}(x, y)$ is,

$$\phi_{ij}(x, y) = (1 - |x - x_i|/h)(1 - |y - y_j|/h) \tag{2.78}$$

for $|x - x_i| \le h$, $|y - y_j| \le h$; otherwise, $\phi_{ij}(x, y) = 0$. The sum of all the ϕ_{ij} over the square lattice is unity. Other choices of the localized functions are possible, of course. Whatever the choice, if the number of lattice sites, including the boundary, is N_0, the expansion of $\psi(x, y)$ takes the form

$$\psi(x, y) \approx \sum_{k,l}^{(N_0)} \Psi_{kl}\phi_{kl}(x, y) \tag{2.79}$$

Apart from the known values at sites on the boundary, the constant coefficients Ψ_{kl} may be thought of as the approximate values of $\psi(x_k, y_l)$. If the lattice spacing h is small enough, the expansion (2.79) will be a reasonable approximate to the true ψ, provided the coefficients are chosen properly.

The second step in Galerkin's method is to choose the test function ϕ in (2.77) to be the $(i, j)^{\text{th}}$ function on the expansion set, with i and j running suc-

cessively over all N *internal* sites of the lattice. The typical equation derived from (2.77) is

$$\sum_{k,l}^{(N_0)} \Psi_{kl} \int_R \nabla\phi_{ij}(x, y) \cdot \nabla\phi_{kl}(x, y)\, dx\, dy = g(x_i, y_j) \int_R \phi_{ij}(x, y)\, dx\, dy \tag{2.80}$$

While the integrals are indicated as being over the whole region R, ϕ_{ij} has support only in a small region around the site (x_i, y_j). In (2.80) it is assumed that $g(x, y)$ varies slowly enough on the scale of the cell size to be approximated in the integral on the right by its value at the lattice site. Once the integrals have been performed, (2.80) becomes one of N coupled inhomogeneous linear algebraic equations for the N unknowns, Ψ_{kl}. The coupling among the Ψ_{kl} is confined to a small number of sites near (x_i, y_j), as indicated in Fig. 2.14 for the localized function (2.78). It is left as a problem to show that the needed integrals for the functions (2.78) are

$$\begin{gathered} \int_R \phi_{ij}(x, y) dx\, dy = h^2 \\ \int_R \nabla\phi_{ij}(x, y) \cdot \nabla\phi_{kl}(x, y) dx\, dy = \begin{Bmatrix} 8/3 \\ -1/3 \end{Bmatrix} \text{ for } \begin{Bmatrix} k = i, & l = j \\ k = i \pm 1, & l = j \\ k = i, & l = j \pm 1 \\ k = i \pm 1, & l = j \pm 1 \end{Bmatrix} \end{gathered} \tag{2.81}$$

When the site (i, j) is adjacent to the boundary, there are three or more terms on the left-hand side of (2.80) that are $(-1/3)$ times known boundary values of

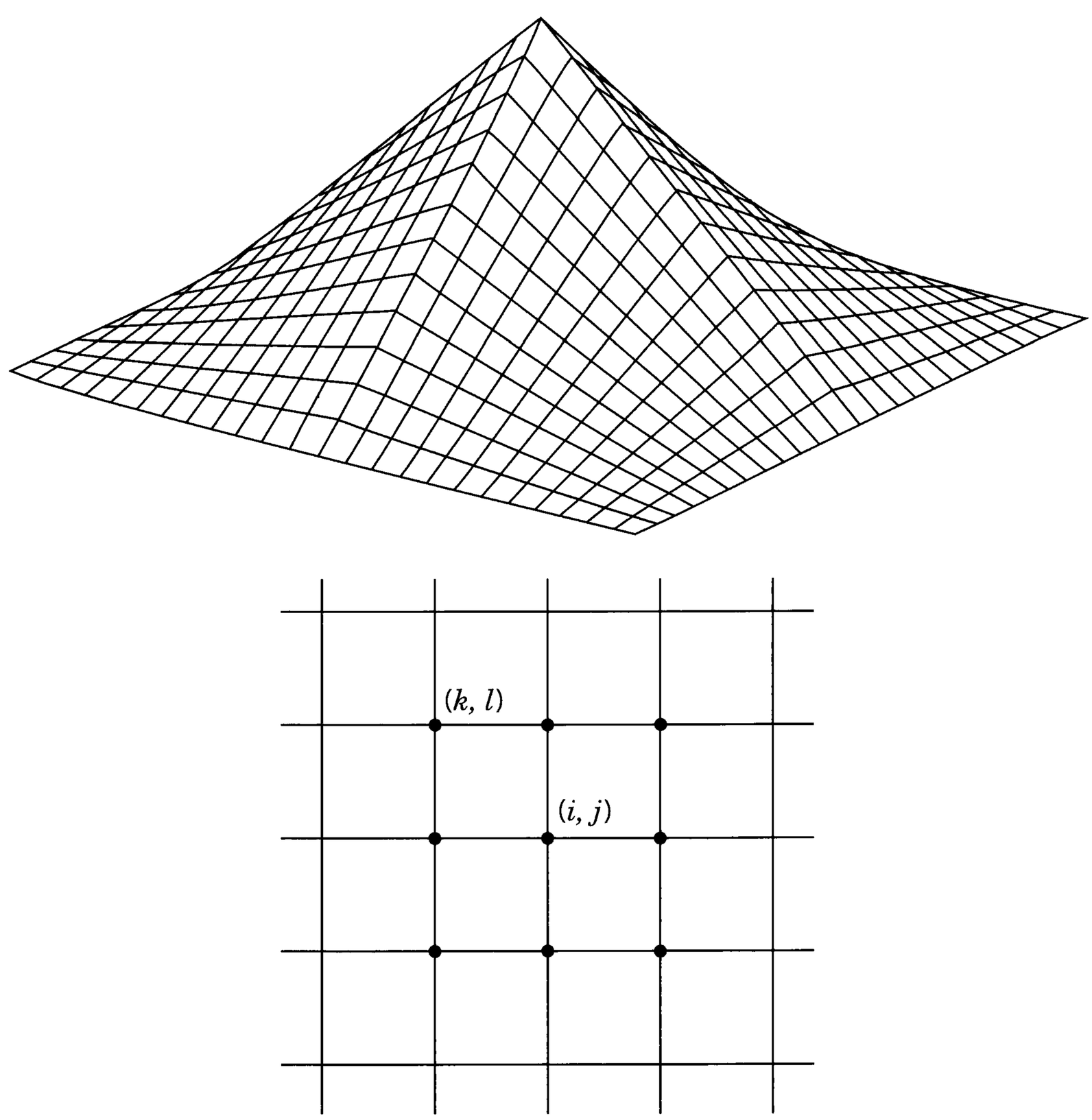

Figure 2.14 Sketch of the $\phi_{ij}(x, y)$ in (2.78). The sites marked with a dot in the lattice (bottom) are those coupled by the integrals on the left in (2.80) for the localized function (2.78).

ψ. These can be moved to the right-hand side as part of the inhomogeneity. If we write (2.80) in matrix form, $\mathbf{K\Psi} = \mathbf{G}$, with $\mathbf{K}$ an $N \times N$ square matrix and $\mathbf{\Psi}$ and $\mathbf{G}$ N-column vectors, the matrix $\mathbf{K}$ is a "sparse" matrix, with only a few nonvanishing elements in any row or column. The solution of the matrix operator equation by inversion of such a sparse matrix can be accomplished rapidly by special numerical techniques (see *Press et al.*). Concrete illustration of this approach is left to the problems at the end of the chapter.

A square lattice is not optimal in many problems because the solution may change more rapidly in some parts of the domain of interest than in other parts. In such regions one wishes to have a finer mesh. An FEA method with a standard generic shape, but permitting different sizes, will be more flexible and therefore superior. We describe the popular triangle as the basic unit in two dimensions.

The triangular element is assumed to be small enough that the field variable changes little over the element and may be approximated by a linear form in each direction. The basic triangular element $e(1, 2, 3)$ is shown in Fig. 2.15. Within this region, we approximate the field variable $\psi(x, y) \approx \psi_e(x, y) = A + Bx + Cy$. The three values (ψ_1, ψ_2, ψ_3) at the nodes or vertices determine the coefficients (A, B, C). It is useful, however, to systematize the procedure for numerical computation by defining three shape functions $N_j^{(e)}(x, y)$, one for each vertex, such that $N_j^{(e)} = 1$ when $x = x_j$, $y = y_j$ and $N_j^{(e)} = 0$ at the other vertices. The shape functions for the element e vanish outside that triangular domain.

Consider $N_1^{(e)} = a_1 + b_1x + c_1y$. Demand that

$$\begin{aligned} a_1 + b_1x_1 + c_1y_1 &= 1 \\ a_1 + b_1x_2 + c_1y_2 &= 0 \\ a_1 + b_1x_3 + c_1y_3 &= 0 \end{aligned}$$

The determinant D of the coefficients on the left is

$$D = \begin{vmatrix} 1 & x_1 & y_1 \\ 1 & x_2 & y_2 \\ 1 & x_3 & y_3 \end{vmatrix} = (x_2 - x_1)(y_3 - y_1) - (x_3 - x_1)(y_2 - y_1)$$

The determinant D is invariant under rotations of the triangle; in fact, $D = 2S_e$, where S_e is the area of the triangle. The coefficients (a_1, b_1, c_1) are

$$\begin{aligned} a_1 &= \frac{1}{2S_e}(x_2y_3 - x_3y_2) \\ b_1 &= \frac{1}{2S_e}(y_2 - y_3) \\ c_1 &= \frac{-1}{2S_e}(x_2 - x_3) \end{aligned}$$

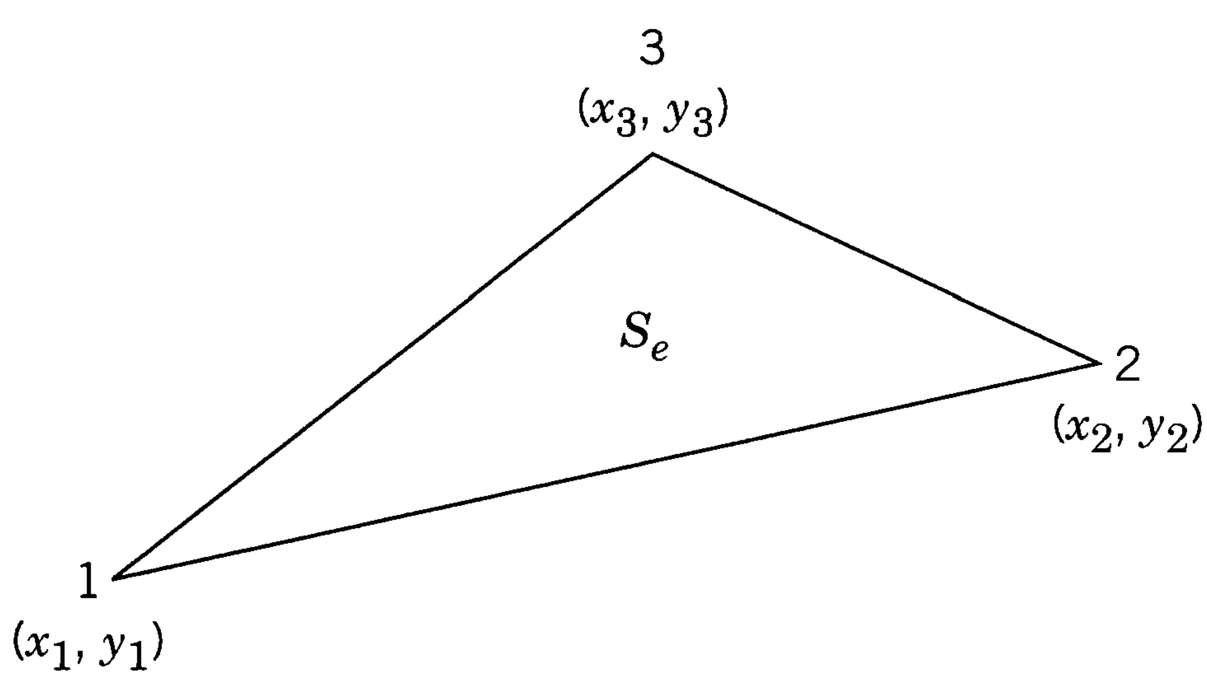

Figure 2.15 Basic triangular element $e(1, 2, 3)$ with area S_e for FEA in two dimensions.

The other $N_j^{(e)}$ can be written down by cyclic permutation of indices. The N_j and their coefficients obey the following relations:

$$\sum_{i=1}^{3} N_i^{(e)}(x, y) = 1; \quad \sum_{i=1}^{3} a_i = 1; \quad \sum_{i=1}^{3} b_i = 0; \quad \sum_{i=1}^{3} c_i = 0;$$

$$a_j + b_j\overline{x_e} + c_j\overline{y_e} = \frac{1}{3} \qquad (j = 1, 2, 3)$$

Here $\overline{x}_e = (x_1 + x_2 + x_3)/3$ and $\overline{y}_e = (y_1 + y_2 + y_3)/3$ are the coordinates of the center of gravity of the triangular element e.

The shape functions for the triangular elements spanning the region R can be used in the Galerkin method as the localized linearly independent expansion set. The field variable $\psi(x, y)$ has the expansion,

$$\psi(x, y) \approx \sum_{f,j} \Psi_j^{(f)} N_j^{(f)}(x, y) \tag{2.82}$$

where the sum goes over all the triangles f and over the vertices of each triangle. The constants $\Psi_j^{(f)}$ are the desired values of the field at the vertices. (There is redundant labeling here because adjacent triangles have some vertices in common.) It is worth noting that despite the shift from one set of shape functions to another as the point (x, y) crosses from one triangle to one adjacent to it, the function defined by the right-hand side of (2.82) is continuous. Because of the linearity of the shape functions, the value of (2.82) along the common side of the two triangles from either representation is the same weighted average of the values at each end, with no contributions from the shape functions for the vertices not in common.

We return to the Poisson equation with Dirichlet boundary conditions and the vanishing integral (2.77). With the expansion (2.82) for $\psi(x, y)$, we choose the test function $\phi(x, y) = N_i^{(e)}(x, y)$ for some particular element e and vertex i (only avoiding vertices on the boundary because we require $\phi = 0$ on C). The choice reduces the integral [and the sum in (2.82)] to one over the particular element chosen, just as did the choice of the localized function in (2.80). The integral, with the inhomogeneity transferred to the right-hand side, is

$$\sum_{j=1}^{3} \Psi_j^{(e)} \int_e \nabla N_i^{(e)} \cdot \nabla N_j^{(e)}\, dx\, dy = \int_e g N_i^{(e)}\, dx\, dy \tag{2.83}$$

If $g(x, y)$ changes very little over the element e, it can be approximated by its value $g_e \equiv g(\overline{x}_e, \overline{y}_e)$ at the center of gravity of the triangle and factored out of the right-hand integral. The remaining integral is

$$\int_e N_i^{(e)}\, dx\, dy = S_e(a_i + b_i\overline{x_e} + c_i\overline{y_e}) = \tfrac{1}{3}S_e \tag{2.84}$$

For the left-hand integral in (2.83), the linearity of the shape functions means that the integrand is a constant. We note that $\partial N_i^{(e)}/\partial x = b_i$, $\partial N_i^{(e)}/\partial y = c_i$, and define

$$k_{ij}^{(e)} = S_e(b_i b_j + c_i c_j) \tag{2.85}$$

The coefficients $k_{ij}^{(e)}$ form an array of dimensionless coupling coefficients for the triangle e. It is straightforward to show that they depend on the shape of the

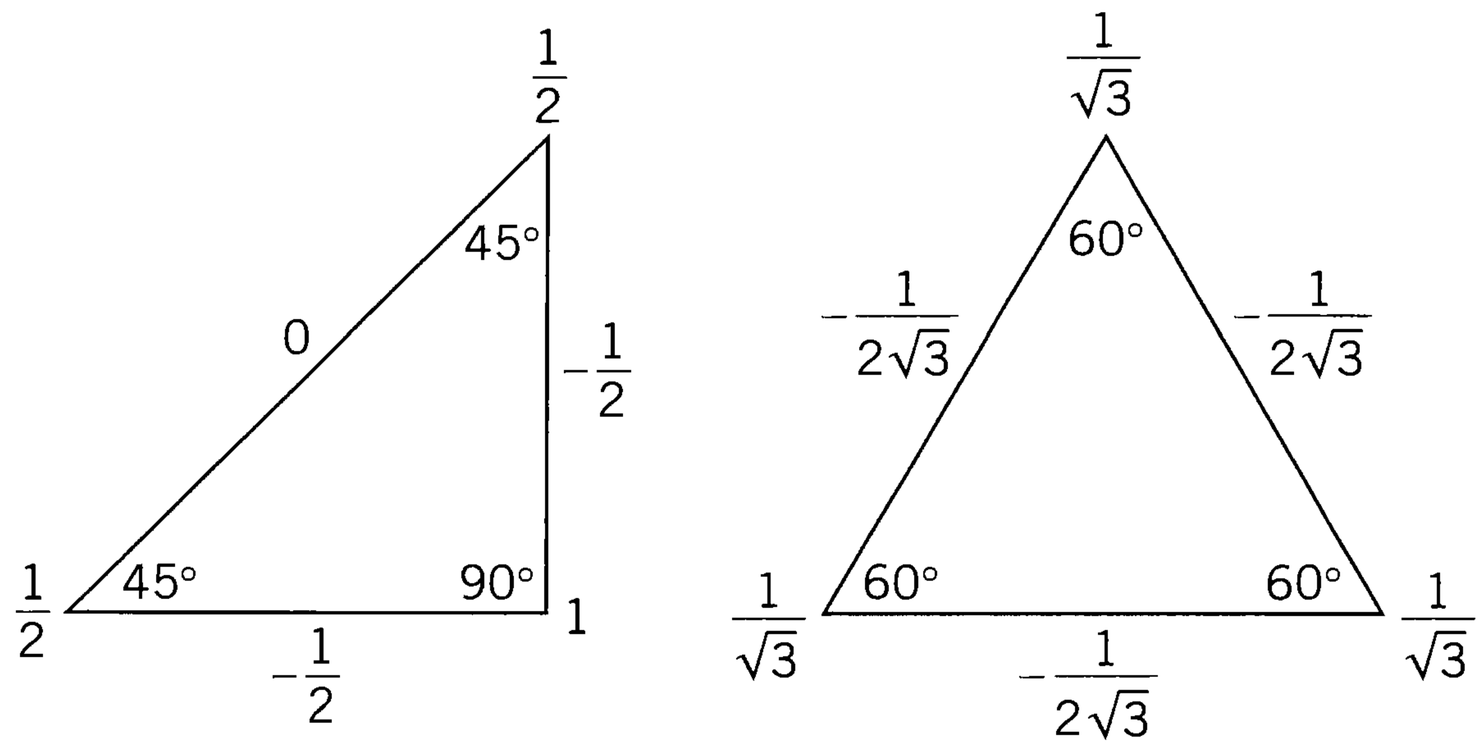

Figure 2.16 Examples of the triangular coupling coefficients. The "diagonal" coefficients are at the corners (vertices) and the "off-diagonal" coefficients along the sides, between vertices.

triangle, but not its orientation or size. Two examples are shown in Fig. 2.16, where the diagonal elements $k_{ii}^{(e)}$ are located at the corresponding vertices (i) and the off-diagonal elements $k_{ij}^{(e)}$ along the line connecting vertex i with vertex j.

With the definition (2.85) of the coupling coefficients, (2.83) becomes

$$\sum_{j=1}^{3} k_{ij}^{(e)}\Psi_j^{(e)} = \frac{S_e}{3} g_e \qquad (i = 1, 2, 3) \tag{2.86}$$

For each element e there are three algebraic equations, except when the side(s) of the triangle form part of the boundary. The three coupled equations can be written in matrix form, $\mathbf{k}^{(e)}\boldsymbol{\Psi}^{(e)} = \mathbf{G}^{(e)}$.

The result for one element must now be generalized to include all the triangular elements spanning R. Let the number of interior vertices or nodes be N and the total number of vertices, including the boundary, be N_0. Label the internal nodes with $j = 1, 2, 3, \ldots, N$, and the boundary nodes by $j = N + 1, N + 2, \ldots, N_0$. Now enlarge and rearrange the matrix $\mathbf{k}^{(e)} \to \mathbf{K}$, where $\mathbf{K}$ is an $N \times N$ matrix with rows and columns labeled by the node index. Similarly, define the N-column vectors, $\boldsymbol{\Psi}$ and $\mathbf{G}$. For each triangular element in turn, add the elements of $k_{ij}^{(e)}$ and $S_e g_e/3$ to the appropriate rows and columns of $\mathbf{K}$ and $\mathbf{G}$. The end result is the matrix equation

$$\mathbf{K}\boldsymbol{\Psi} = \mathbf{G} \tag{2.87}$$

where

$$\begin{gathered} \mathbf{K} = (k_{ij}) \qquad \text{with } k_{ii} = \sum_T k_{ii}^{(e)} \qquad \text{and} \qquad k_{ij} = \sum_E k_{ij}^{(e)}, \qquad i \neq j \\ G_i = \frac{1}{3}\sum_T S_e g_e - \sum_{j=N+1}^{N_0} k_{ij}^{(e)}\Psi_j^{(e)} \end{gathered} \tag{2.88}$$

The summation over T means over all the triangles connected to the internal node i; the summation over E means a sum over all the triangles with a side from internal node i to internal node j. The final sum in G_i contains, for nodes connected directly to the boundary nodes, the known boundary values of ψ there and the corresponding $k_{ij}^{(e)}$ values (not present in the matrix $\mathbf{K}$). The reader may ponder Fig. 2.17 to be convinced of the correctness of (2.88). Just as for the square lattice, the $N \times N$ matrix $\mathbf{K}$ is a symmetric sparse matrix, with positive diagonal elements. As mentioned earlier, there are special efficient methods of inverting such matrices, even if very large.

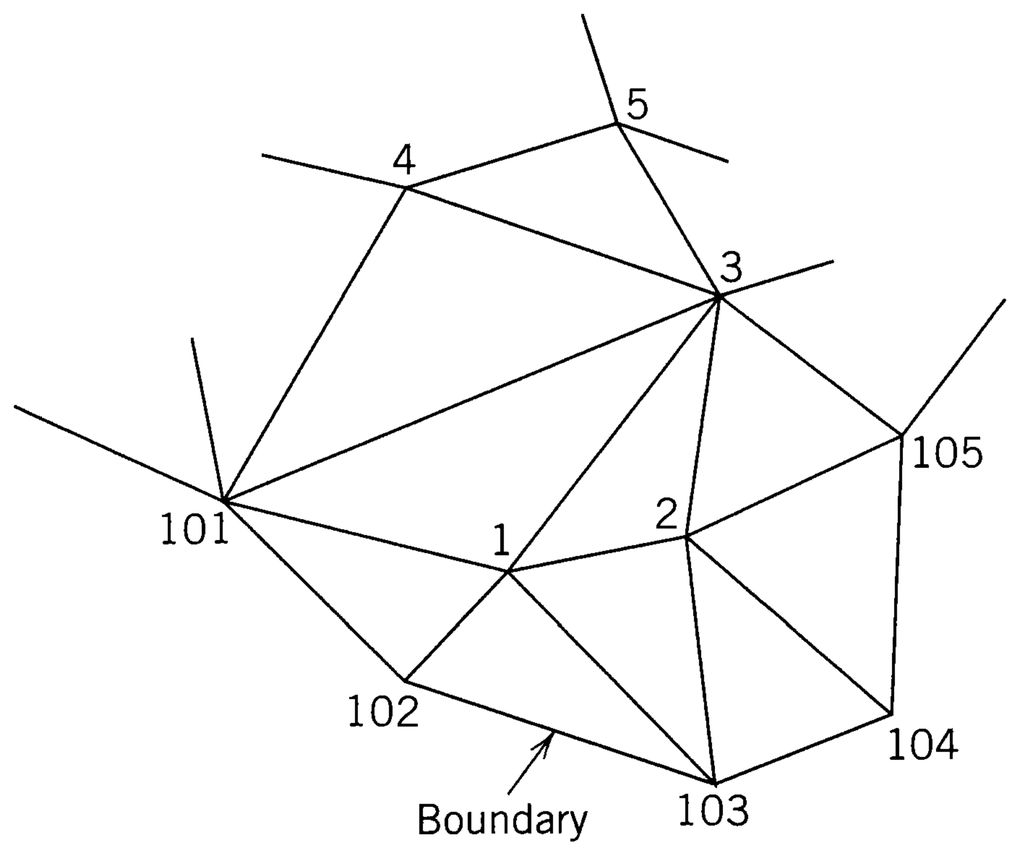

Figure 2.17 A part of the array of triangular elements spanning the region R, assumed to have 100 internal nodes.

The obvious generalization of the triangle to three-dimensional FEA is to add another vertex out of the plane to make a tetrahedron the basic element of volume. Now four shape functions, $N_j^{(e)}(x, y, z)$, are used to give an approximation to the field variable within the tetrahedron. The algebra is more involved, but the concept is the same.

Our discussion is a bare introduction to finite element analysis. Many variants exist in every branch of physics and engineering. National laboratories and commercial companies have "canned" FEA packages: POISSON is one such package, developed at the Lawrence Berkeley National Laboratory jointly with Livermore National Laboratory; TOSCA and CARMEN are two developed at the Rutherford–Appleton Laboratory in Britain.

References and Suggested Reading

The method of images and the related technique of inversion are treated in many books; among the better or more extensive discussions are those by

Jeans, Chapter VIII
Maxwell, Vol. 1, Chapter XI
Smythe, Chapters IV and V

The classic use of inversion by Lord Kelvin in 1847 to obtain the charge distribution on the inside and outside surfaces of a thin, charged, conducting spherical bowl is discussed in

Kelvin, p. 186
Jeans, pp. 250–251

A truly encyclopedic source of examples of all sorts with numerous diagrams is the book by Durand, especially Chapters III and IV. Durand discusses inversion on pp. 107–114.

Complex variables and conformal mapping techniques for the solution of two-dimensional potential problems are discussed by

Durand, Chapter X
Jeans, Chapter VIII, Sections 306–337
Maxwell, Vol. I, Chapter XII
Morse and Feshbach, pp. 443–453, 1215–1252
Smythe, Chapter IV, Sections 4.09–4.31
Thomson, Chapter 3

A useful little mathematics book on conformal mapping is

Bieberbach

There are, in addition, many engineering books devoted to the subject, e.g.,

Gibbs

Rothe, Ollendorff, and Polhausen

Elementary, but clear, discussions of the mathematical theory of Fourier series and integrals, and orthogonal expansions, can be found in

Churchill

Hildebrand, Chapter 5

A somewhat old-fashioned treatment of Fourier series and integrals, but with many examples and problems, is given by

Byerly

The literature on numerical methods is vast and growing. A good guidepost to pertinent literature is

Paul L. DeVries, Resource Letter CP-1: Computational Physics, *Am. J. Phys.* **64**, 364–368 (1996)

In addition to the books cited at the beginning of Section 2.12, two others are

P. Hammond and J. K. Sykulski, *Engineering Electromagnetism, Physical Processes and Computation*, Oxford University Press, New York (1994).

C. W. Steele, *Numerical Computation of Electric and Magnetic Fields*, Van Nostrand, New York (1987).

The first of these has a brief but clear discussion of FEA in Chapter 7; the second treats FEA and related topics in greater depth.

Problems

2.1 A point charge q is brought to a position a distance d away from an infinite plane conductor held at zero potential. Using the method of images, find:

(a) the surface-charge density induced on the plane, and plot it;

(b) the force between the plane and the charge by using Coulomb's law for the force between the charge and its image;

(c) the total force acting on the plane by integrating $\sigma^2/2\epsilon_0$ over the whole plane;

(d) the work necessary to remove the charge q from its position to infinity;

(e) the potential energy between the charge q and its image [compare the answer to part d and discuss].

(f) Find the answer to part d in electron volts for an electron originally one angstrom from the surface.

2.2 Using the method of images, discuss the problem of a point charge q *inside* a hollow, grounded, conducting sphere of inner radius a. Find

(a) the potential inside the sphere;

(b) the induced surface-charge density;

(c) the magnitude and direction of the force acting on q.

(d) Is there any change in the solution if the sphere is kept at a fixed potential V? If the sphere has a total charge Q on its inner and outer surfaces?

2.3 A straight-line charge with constant linear charge density λ is located perpendicular to the x-y plane in the first quadrant at (x_0, y_0). The intersecting planes $x = 0$, $y \geq 0$ and $y = 0$, $x \geq 0$ are conducting boundary surfaces held at zero potential. Consider the potential, fields, and surface charges in the first quadrant.

(a) The well-known potential for an isolated line charge at (x_0, y_0) is $\Phi(x, y) = (\lambda/4\pi\epsilon_0)\ln(R^2/r^2)$, where $r^2 = (x - x_0)^2 + (y - y_0)^2$ and R is a constant. Determine the expression for the potential of the line charge in the presence of the intersecting planes. Verify explicitly that the potential and the tangential electric field vanish on the boundary surfaces.

(b) Determine the surface charge density σ on the plane $y = 0$, $x \geq 0$. Plot σ/λ versus x for $(x_0 = 2, y_0 = 1)$, $(x_0 = 1, y_0 = 1)$, and $(x_0 = 1, y_0 = 2)$.

(c) Show that the total charge (per unit length in z) on the plane $y = 0$, $x \geq 0$ is

$$Q_x = -\frac{2}{\pi}\lambda \tan^{-1}\left(\frac{x_0}{y_0}\right)$$

What is the total charge on the plane $x = 0$?

(d) Show that far from the origin $[\rho \gg \rho_0$, where $\rho = \sqrt{(x^2 + y^2)}$ and $\rho_0 = \sqrt{(x_0^2 + y_0^2)}]$ the leading term in the potential is

$$\Phi \to \Phi_{\text{asym}} = \frac{4\lambda}{\pi\epsilon_0}\frac{(x_0 y_0)(xy)}{\rho^4}$$

Interpret.

2.4 A point charge is placed a distance $d > R$ from the center of an equally charged, isolated, conducting sphere of radius R.

(a) Inside of what distance from the surface of the sphere is the point charge attracted rather than repelled by the charged sphere?

(b) What is the limiting value of the force of attraction when the point charge is located a distance a $(= d - R)$ from the surface of the sphere, if $a \ll R$?

(c) What are the results for parts a and b if the charge on the sphere is twice (half) as large as the point charge, but still the same sign?

[Answers: **(a)** $d/R - 1 = 0.6178$, **(b)** $F = -q^2/(16\pi\epsilon_0 a^2)$, i.e., image force, **(c)** for $Q = 2q$, $d/R - 1 = 0.4276$; for $Q = q/2$, $d/R - 1 = 0.8823$. The answer for part b is the same.]

2.5 **(a)** Show that the work done to remove the charge q from a distance $r > a$ to infinity against the force, Eq. (2.6), of a grounded conducting sphere is

$$W = \frac{q^2 a}{8\pi\epsilon_0(r^2 - a^2)}$$

Relate this result to the electrostatic potential, Eq. (2.3), and the energy discussion of Section 1.11.

(b) Repeat the calculation of the work done to remove the charge q against the force, Eq. (2.9), of an isolated charged conducting sphere. Show that the work done is

$$W = \frac{1}{4\pi\epsilon_0}\left[\frac{q^2 a}{2(r^2 - a^2)} - \frac{q^2 a}{2r^2} - \frac{qQ}{r}\right]$$

Relate the work to the electrostatic potential, Eq. (2.8), and the energy discussion of Section 1.11.

2.6 The electrostatic problem of a point charge q outside an isolated, charged conducting sphere is equivalent to that of three charges, the original and two others, one located at the center of the sphere and another ("the image charge") inside the now imaginary sphere, on the line joining the center and the original charge.

If the point charge and sphere are replaced by two conducting spheres of radii r_a and r_b, carrying total charges Q_a and Q_b, respectively, with centers separated by a distance $d > r_a + r_b$, there is an equivalence with an infinite set of charges within each sphere, one at the center and a set of images along the line joining the centers. The charges and their locations can be determined iteratively, starting with a charge $q_a(1)$ at the center of the first sphere and $q_b(1)$ correspondingly for the second sphere. The charge $q_b(1)$ has its image $q_a(2)$ within the first sphere and vice versa. Then the image charge within the first sphere induces another image within the second sphere, and so on. The sum of all the charges within each sphere must be scaled to be equal to Q_a or Q_b.

The electrostatic potential outside the spheres, the force between the spheres, etc. can be found by summing the contributions from all the charges.

(a) Show that the charges and their positions are determined iteratively by the relations,

$$q_a(j) = -r_a q_b(j-1)/d_b(j-1), \qquad x_a(j) = r_a^2/d_b(j-1), \qquad d_a(j) = d - x_a(j)$$
$$q_b(j) = -r_b q_a(j-1)/d_a(j-1), \qquad x_b(j) = r_b^2/d_a(j-1), \qquad d_b(j) = d - x_b(j)$$

for $j = 2, 3, 4, \ldots$, with $d_a(1) = d_b(1) = d$, and $x_a(1) = x_b(1) = 0$.

(b) Find the image charges and their locations as well as the potentials on the spheres and force between them by means of a suitable computer program. [In computing the potential on each sphere, evaluate it in different places: e.g., in the equatorial plane and at the pole opposite the other sphere. This permits a check on the equipotential of the conductor and on the accuracy of computation.]

(c) As an example, show that for two equally charged spheres of the same radius R, the force between them when almost in contact is 0.6189 times the value that would be obtained if all the charge on each sphere were concentrated at its center. Show numerically and by explicit summation of the series that the capacitance of two identical conducting spheres in contact is $C/4\pi\epsilon_0 R = 1.3863\cdots$ [$= \ln 4$].

Reference: J. A. Soules, *Am. J. Phys.* **58**, 1195 (1990).

2.7 Consider a potential problem in the half-space defined by $z \geq 0$, with Dirichlet boundary conditions on the plane $z = 0$ (and at infinity).

(a) Write down the appropriate Green function $G(\mathbf{x}, \mathbf{x}')$.

(b) If the potential on the plane $z = 0$ is specified to be $\Phi = V$ inside a circle of radius a centered at the origin, and $\Phi = 0$ outside that circle, find an integral expression for the potential at the point P specified in terms of cylindrical coordinates (ρ, ϕ, z).

(c) Show that, along the axis of the circle ($\rho = 0$), the potential is given by

$$\Phi = V\left(1 - \frac{z}{\sqrt{a^2 + z^2}}\right)$$

(d) Show that at large distances ($\rho^2 + z^2 \gg a^2$) the potential can be expanded in a power series in $(\rho^2 + z^2)^{-1}$, and that the leading terms are

$$\Phi = \frac{Va^2}{2}\frac{z}{(\rho^2 + z^2)^{3/2}}\left[1 - \frac{3a^2}{4(\rho^2 + z^2)} + \frac{5(3\rho^2 a^2 + a^4)}{8(\rho^2 + z^2)^2} + \cdots\right]$$

Verify that the results of parts c and d are consistent with each other in their common range of validity.

2.8 A two-dimensional potential problem is defined by two straight parallel line charges separated by a distance R with equal and opposite linear charge densities λ and $-\lambda$.

(a) Show by direct construction that the surface of constant potential V is a circular cylinder (circle in the transverse dimensions) and find the coordinates of the axis of the cylinder and its radius in terms of R, λ, and V.

(b) Use the results of part a to show that the capacitance per unit length C of two right-circular cylindrical conductors, with radii a and b, separated by a distance $d > a + b$, is

$$C = \frac{2\pi\epsilon_0}{\cosh^{-1}\left(\dfrac{d^2 - a^2 - b^2}{2ab}\right)}$$

(c) Verify that the result for C agrees with the answer in Problem 1.7 in the appropriate limit and determine the next nonvanishing order correction in powers of a/d and b/d.

(d) Repeat the calculation of the capacitance per unit length for two cylinders inside each other ($d < |b - a|$). Check the result for concentric cylinders ($d = 0$).

2.9 An insulated, spherical, conducting shell of radius a is in a uniform electric field E_0. If the sphere is cut into two hemispheres by a plane perpendicular to the field, find the force required to prevent the hemispheres from separating

(a) if the shell is uncharged;

(b) if the total charge on the shell is Q.

2.10 A large parallel plate capacitor is made up of two plane conducting sheets with separation D, one of which has a small hemispherical boss of radius a on its inner surface ($D \gg a$). The conductor with the boss is kept at zero potential, and the other conductor is at a potential such that far from the boss the electric field between the plates is E_0.

(a) Calculate the surface-charge densities at an arbitrary point on the plane and on the boss, and sketch their behavior as a function of distance (or angle).

(b) Show that the total charge on the boss has the magnitude $3\pi\epsilon_0 E_0 a^2$.

(c) If, instead of the other conducting sheet at a different potential, a point charge q is placed directly above the hemispherical boss at a distance d from its center, show that the charge induced on the boss is

$$q' = -q\left[1 - \frac{d^2 - a^2}{d\sqrt{d^2 + a^2}}\right]$$

2.11 A line charge with linear charge density τ is placed parallel to, and a distance R away from, the axis of a conducting cylinder of radius b held at fixed voltage such that the potential vanishes at infinity. Find

(a) the magnitude and position of the image charge(s);

(b) the potential at any point (expressed in polar coordinates with the origin at the axis of the cylinder and the direction from the origin to the line charge as the x axis), including the asymptotic form far from the cylinder;

(c) the induced surface-charge density, and plot it as a function of angle for $R/b = 2, 4$ in units of $\tau/2\pi b$;

(d) the force per unit length on the line charge.

2.12 Starting with the series solution (2.71) for the two-dimensional potential problem with the potential specified on the surface of a cylinder of radius b, evaluate the coefficients formally, substitute them into the series, and sum it to obtain the potential *inside* the cylinder in the form of Poisson's integral:

$$\Phi(\rho, \phi) = \frac{1}{2\pi} \int_0^{2\pi} \Phi(b, \phi') \frac{b^2 - \rho^2}{b^2 + \rho^2 - 2b\rho \cos(\phi' - \phi)} \, d\phi'$$

What modification is necessary if the potential is desired in the region of space bounded by the cylinder and infinity?

2.13 **(a)** Two halves of a long hollow conducting cylinder of inner radius b are separated by small lengthwise gaps on each side, and are kept at different potentials V_1 and V_2. Show that the potential inside is given by

$$\Phi(\rho, \phi) = \frac{V_1 + V_2}{2} + \frac{V_1 - V_2}{\pi} \tan^{-1}\left(\frac{2b\rho}{b^2 - \rho^2} \cos \phi\right)$$

where ϕ is measured from a plane perpendicular to the plane through the gap.

(b) Calculate the surface-charge density on each half of the cylinder.

2.14 A variant of the preceding two-dimensional problem is a long hollow conducting cylinder of radius b that is divided into equal quarters, alternate segments being held at potential $+V$ and $-V$.

(a) Solve by means of the series solution (2.71) and show that the potential inside the cylinder is

$$\Phi(\rho, \phi) = \frac{4V}{\pi} \sum_{n=0}^{\infty} \left(\frac{\rho}{b}\right)^{4n+2} \frac{\sin[(4n + 2)\phi]}{2n + 1}$$

(b) Sum the series and show that

$$\Phi(\rho, \phi) = \frac{2V}{\pi} \tan^{-1}\left(\frac{2\rho^2 b^2 \sin 2\phi}{b^4 - \rho^4}\right)$$

(c) Sketch the field lines and equipotentials.

2.15 **(a)** Show that the Green function $G(x, y; x', y')$ appropriate for Dirichlet boundary conditions for a square two-dimensional region, $0 \le x \le 1$, $0 \le y \le 1$, has an expansion

$$G(x, y; x', y') = 2 \sum_{n=1}^{\infty} g_n(y, y') \sin(n\pi x) \sin(n\pi x')$$

where $g_n(y, y')$ satisfies

$$\left(\frac{\partial^2}{\partial y'^2} - n^2\pi^2\right) g_n(y, y') = -4\pi\delta(y' - y) \quad \text{and} \quad g_n(y, 0) = g_n(y, 1) = 0$$

(b) Taking for $g_n(y, y')$ appropriate linear combinations of $\sinh(n\pi y')$ and $\cosh(n\pi y')$ in the two regions, $y' < y$ and $y' > y$, in accord with the boundary conditions and the discontinuity in slope required by the source delta function, show that the explicit form of G is

$$G(x, y; x', y') = 8 \sum_{n=1}^{\infty} \frac{1}{n \sinh(n\pi)} \sin(n\pi x) \sin(n\pi x') \sinh(n\pi y_<) \sinh[n\pi(1 - y_>)]$$

where $y_<(y_>)$ is the smaller (larger) of y and y'.

2.16 A two-dimensional potential exists on a unit square area ($0 \le x \le 1$, $0 \le y \le 1$) bounded by "surfaces" held at zero potential. Over the entire square there is a uniform charge density of unit strength (per unit length in z). Using the Green function of Problem 2.15, show that the solution can be written as

$$\Phi(x, y) = \frac{4}{\pi^3 \epsilon_0} \sum_{m=0}^{\infty} \frac{\sin[(2m+1)\pi x]}{(2m+1)^3} \left\{ 1 - \frac{\cosh[(2m+1)\pi(y - \frac{1}{2})]}{\cosh[(2m+1)\pi/2]} \right\}$$

2.17 **(a)** Construct the free-space Green function $G(x, y; x', y')$ for two-dimensional electrostatics by integrating $1/R$ with respect to $(z' - z)$ between the limits $\pm Z$, where Z is taken to be very large. Show that apart from an inessential constant, the Green function can be written alternately as

$$\begin{aligned} G(x, y; x', y') &= -\ln[(x - x')^2 + (y - y')^2] \\ &= -\ln[\rho^2 + \rho'^2 - 2\rho\rho' \cos(\phi - \phi')] \end{aligned}$$

(b) Show explicitly by separation of variables in polar coordinates that the Green function can be expressed as a Fourier series in the azimuthal coordinate,

$$G = \frac{1}{2\pi} \sum_{-\infty}^{\infty} e^{im(\phi - \phi')} g_m(\rho, \rho')$$

where the radial Green functions satisfy

$$\frac{1}{\rho'} \frac{\partial}{\partial \rho'} \left(\rho' \frac{\partial g_m}{\partial \rho'} \right) - \frac{m^2}{\rho'^2} g_m = -4\pi \frac{\delta(\rho - \rho')}{\rho}$$

Note that $g_m(\rho, \rho')$ for fixed ρ is a different linear combination of the solutions of the homogeneous radial equation (2.68) for $\rho' < \rho$ and for $\rho' > \rho$, with a discontinuity of slope at $\rho' = \rho$ determined by the source delta function.

(c) Complete the solution and show that the free-space Green function has the expansion

$$G(\rho, \phi; \rho', \phi') = -\ln(\rho_>^2) + 2 \sum_{m=1}^{\infty} \frac{1}{m} \left(\frac{\rho_<}{\rho_>} \right)^m \cdot \cos[m(\phi - \phi')]$$

where $\rho_<(\rho_>)$ is the smaller (larger) of ρ and ρ'.

2.18 **(a)** By finding appropriate solutions of the radial equation in part b of Problem 2.17, find the Green function for the interior Dirichlet problem of a cylinder of radius b [$g_m(\rho, \rho' = b) = 0$. See (1.40)]. First find the series expansion akin to the free-space Green function of Problem 2.17. Then show that it can be written in closed form as

$$G = \ln\left[\frac{\rho^2 \rho'^2 + b^4 - 2\rho\rho' b^2 \cos(\phi - \phi')}{b^2(\rho^2 + \rho'^2 - 2\rho\rho' \cos(\phi - \phi'))} \right]$$

or

$$G = \ln\left[\frac{(b^2 - \rho^2)(b^2 - \rho'^2) + b^2 |\boldsymbol{\rho} - \boldsymbol{\rho}'|^2}{b^2 |\boldsymbol{\rho} - \boldsymbol{\rho}'|^2} \right]$$

(b) Show that the solution of the Laplace equation with the potential given as $\Phi(b, \phi)$ on the cylinder can be expressed as Poisson's integral of Problem 2.12.

(c) What changes are necessary for the Green function for the *exterior* problem ($b < \rho < \infty$), for both the Fourier expansion and the closed form? [Note that the exterior Green function is not rigorously correct because it does not vanish

for ρ or $\rho' \to \infty$. For situations in which the potential falls off fast enough as $\rho \to \infty$, no mistake is made in its use.]

2.19 Show that the two-dimensional Green function for Dirichlet boundary conditions for the annular region, $b \le \rho \le c$ (concentric cylinders) has the expansion

$$G = \frac{\ln(\rho_<^2/b^2)\,\ln(c^2/\rho_>^2)}{\ln(c^2/b^2)} + 2\sum_{m=1}^{\infty} \frac{\cos[m(\phi - \phi')]}{m[1 - (b/c)^{2m}]}\,(\rho_<^m - b^{2m}/\rho_<^m)(1/\rho_>^m - \rho_>^m/c^{2m})$$

2.20 Two-dimensional electric quadrupole focusing fields for particle accelerators can be modeled by a set of four symmetrically placed line charges, with linear charge densities $\pm\lambda$, as shown in the left-hand figure (the right-hand figure shows the electric field lines).

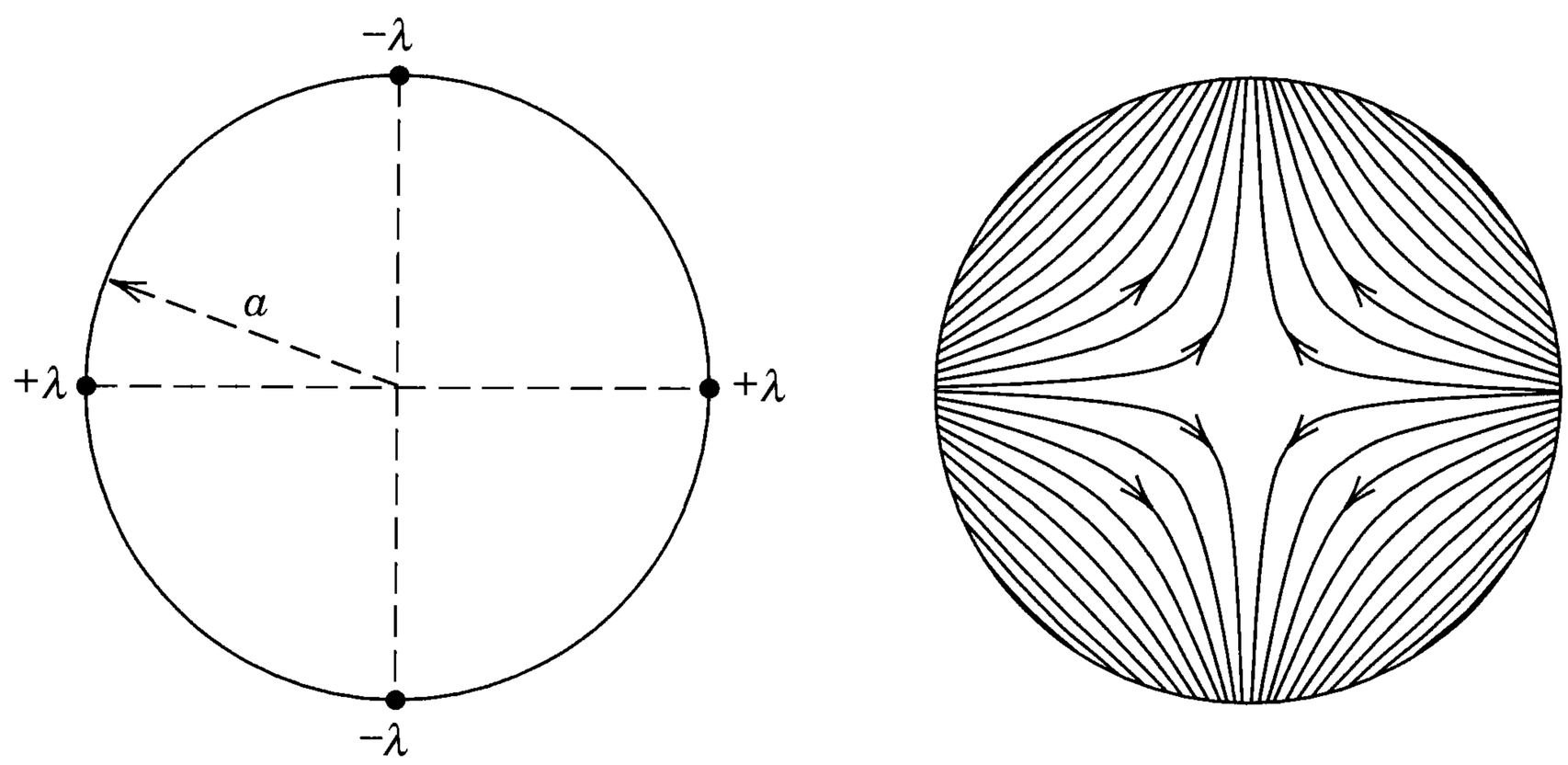

Problem 2.20

The charge density in two dimensions can be expressed as

$$\sigma(\rho, \phi) = \frac{\lambda}{a}\sum_{n=0}^{3} (-1)^n\,\delta(\rho - a)\,\delta(\phi - n\pi/2)$$

(a) Using the Green function expansion from Problem 2.17c, show that the electrostatic potential is

$$\Phi(\rho, \phi) = \frac{\lambda}{\pi\epsilon_0}\sum_{k=0}^{\infty} \frac{1}{2k+1}\left(\frac{\rho_<}{\rho_>}\right)^{4k+2} \cos[(4k+2)\,\phi]$$

(b) Relate the solution of part a to the real part of the complex function

$$w(z) = \frac{2\lambda}{4\pi\epsilon_0}\ln\left[\frac{(z - ia)(z + ia)}{(z - a)(z + a)}\right]$$

where $z = x + iy = \rho e^{i\phi}$. Comment on the connection to Problem 2.3.

(c) Find expressions for the Cartesian components of the electric field near the origin, expressed in terms of x and y. Keep the $k = 0$ and $k = 1$ terms in the expansion. For $y = 0$ what is the relative magnitude of the $k = 1$ (2^6-pole) contribution to E_x compared to the $k = 0$ (2^2-pole or quadrupole) term?

2.21 Use Cauchy's theorem to derive the Poisson integral solution. Cauchy's theorem states that if $F(z)$ is analytic in a region R bounded by a closed curve C, then

$$\frac{1}{2\pi i}\oint_C \frac{F(z')\,dz'}{z' - z} = \begin{cases} F(z) & \text{if } z \text{ is inside } R \\ 0 & \text{if } z \text{ is outside } R \end{cases}$$

Hint: You may wish to add an integral that vanishes (associated with the image point) to the integral for the point inside the circle.

2.22 **(a)** For the example of oppositely charged conducting hemispherical shells separated by a tiny gap, as shown in Figure 2.8, show that the interior potential ($r < a$) on the z axis is

$$\Phi_{\text{in}}(z) = V\frac{a}{z}\left[1 - \frac{(a^2 - z^2)}{a\sqrt{a^2 + z^2}}\right]$$

Find the first few terms of the expansion in powers of z and show that they agree with (2.27) with the appropriate substitutions.

(b) From the result of part a and (2.22), show that the radial electric field on the positive z axis is

$$E_r(z) = \frac{Va^2}{(z^2 + a^2)^{3/2}}\left(3 + \frac{a^2}{z^2}\right)$$

for $z > a$, and

$$E_r(z) = -\frac{V}{a}\left[\frac{3 + (a/z)^2}{(1 + (z/a)^2)^{3/2}} - \frac{a^2}{z^2}\right]$$

for $|z| < a$. Show that the second form is well behaved at the origin, with the value, $E_r(0) = -3V/2a$. Show that at $z = a$ (north pole inside) it has the value $-(\sqrt{2} - 1)V/a$. Show that the radial field at the north pole outside has the value $\sqrt{2}\,V/a$.

(c) Make a sketch of the electric field lines, both inside and outside the conducting hemispheres, with directions indicated. Make a *plot* of the radial electric field along the z axis from $z = -2a$ to $z = +2a$.

2.23 A hollow cube has conducting walls defined by six planes $x = 0$, $y = 0$, $z = 0$, and $x = a$, $y = a$, $z = a$. The walls $z = 0$ and $z = a$ are held at a constant potential V. The other four sides are at zero potential.

(a) Find the potential $\Phi(x, y, z)$ at any point inside the cube.

(b) Evaluate the potential at the center of the cube numerically, accurate to three significant figures. How many terms in the series is it necessary to keep in order to attain this accuracy? Compare your numerical result with the average value of the potential on the walls. See Problem 2.28.

(c) Find the surface-charge density on the surface $z = a$.

2.24 In the two-dimensional region shown in Fig. 2.12, the angular functions appropriate for Dirichlet boundary conditions at $\phi = 0$ and $\phi = \beta$ are $\Phi(\phi) = A_m \sin(m\pi\phi/\beta)$. Show that the completeness relation for these functions is

$$\delta(\phi - \phi') = \frac{2}{\beta}\sum_{m=1}^{\infty} \sin(m\pi\phi/\beta)\sin(m\pi\phi'/\beta) \qquad \text{for } 0 < \phi, \phi' < \beta$$

2.25 Two conducting planes at zero potential meet along the z axis, making an angle β between them, as in Fig. 2.12. A unit line charge parallel to the z axis is located between the planes at position (ρ', ϕ').

(a) Show that $(4\pi\epsilon_0)$ times the potential in the space between the planes, that is, the Dirichlet Green function $G(\rho, \phi; \rho', \phi')$, is given by the infinite series

$$G(\rho, \phi; \rho', \phi') = 4\sum_{m=1}^{\infty} \frac{1}{m}\rho_<^{m\pi/\beta}\rho_>^{-m\pi/\beta}\sin(m\pi\phi/\beta)\sin(m\pi\phi'/\beta)$$

(b) By means of complex-variable techniques or other means, show that the series can be summed to give a closed form,

$$G(\rho, \phi; \rho', \phi') = \ln\left\{\frac{(\rho)^{2\pi/\beta} + (\rho')^{2\pi/\beta} - 2(\rho\rho')^{\pi/\beta}\cos[\pi(\phi + \phi')/\beta]}{(\rho)^{2\pi/\beta} + (\rho')^{2\pi/\beta} - 2(\rho\rho')^{\pi/\beta}\cos[\pi(\phi - \phi'/\beta]}\right\}$$

(c) Verify that you obtain the familiar results when $\beta = \pi$ and $\beta = \pi/2$.

2.26 The two-dimensional region, $\rho \geq a$, $0 \leq \phi \leq \beta$, is bounded by conducting surfaces at $\phi = 0$, $\rho = a$, and $\phi = \beta$ held at zero potential, as indicated in the sketch. At large ρ the potential is determined by some configuration of charges and/or conductors at fixed potentials.

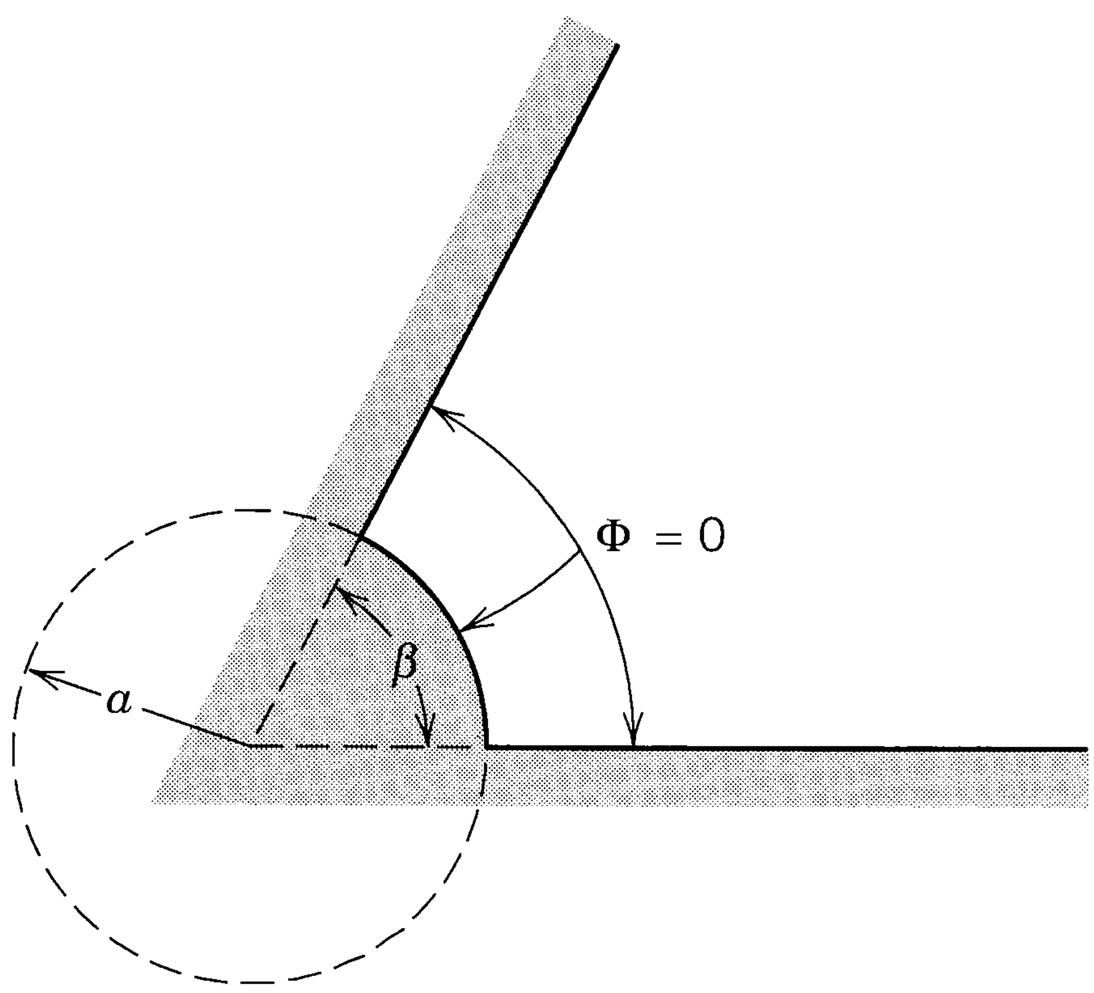

Problem 2.26

(a) Write down a solution for the potential $\Phi(\rho, \phi)$ that satisfies the boundary conditions for finite ρ.

(b) Keeping only the lowest nonvanishing terms, calculate the electric field components E_ρ and E_ϕ and also the surface-charge densities $\sigma(\rho, 0)$, $\sigma(\rho, \beta)$, and $\sigma(a, \phi)$ on the three boundary surfaces.

(c) Consider $\beta = \pi$ (a plane conductor with a half-cylinder of radius a on it). Show that far from the half-cylinder the lowest order terms of part b give a uniform electric field normal to the plane. Sketch the charge density on and in the neighborhood of the half-cylinder. For fixed electric field strength far from the plane, show that the total charge on the half-cylinder (actually charge per unit length in the z direction) is twice as large as would reside on a strip of width $2a$ in its absence. Show that the extra portion is drawn from regions of the plane nearby, so that the total charge on a strip of width large compared to a is the same whether the half-cylinder is there or not.

2.27 Consider the two-dimensional wedge-shaped region of Problem 2.26, with $\beta = 2\pi$. This corresponds to a semi-infinite thin sheet of conductor on the positive x axis from $x = a$ to infinity with a conducting cylinder of radius a fastened to its edge.

(a) Sketch the surface-charge densities on the cylinder and on the top and bottom of the sheet, using the lowest order solution.

(b) Calculate the total charge on the cylinder and compare with the total deficiency of charge on the sheet near the cylinder, that is, the total difference in charge for a finite compared with $a = 0$, assuming that the charge density far from the cylinder is the same.

2.28 A closed volume is bounded by conducting surfaces that are the n sides of a regular polyhedron ($n = 4, 6, 8, 12, 20$). The n surfaces are at different potentials V_i, $i = 1, 2, \ldots, n$. Prove in the simplest way you can that the potential at the center of the polyhedron is the average of the potential on the n sides. This problem bears on Problem 2.23b, and has an interesting similarity to the result of Problem 1.10.

2.29 For the Galerkin method on a two-dimensional square lattice with lattice spacing h, verify the relations (2.81) for the localized "pyramid" basis functions, $\phi_{ij}(x, y) = (1 - |x|/h)(1 - |y|/h)$, $|x| < h$, $|y| < h$, where x and y are measured from the site (i, j). In particular,

$$\int dx \int dy\ \phi_{i,j}(x, y) = h^2; \qquad \int dx \int dy\ \nabla\phi_{i,j} \cdot \nabla\phi_{i,j} = \frac{8}{3};$$

$$\int dx \int dy\ \nabla\phi_{i+1,j} \cdot \nabla\phi_{i,j} = -\frac{1}{3}; \qquad \int dx \int dy\ \nabla\phi_{i,j+1} \cdot \nabla\phi_{i,j} = -\frac{1}{3};$$

$$\int dx \int dy\ \nabla\phi_{i+1,j+1} \cdot \nabla\phi_{i,j} = -\frac{1}{3}$$

2.30 Using the results of Problem 2.29, apply the Galerkin method to the integral equivalent of the Poisson equation with zero potential on the boundary,

$$\int_V dx\ dy[\nabla\phi_{i,j} \cdot \nabla\psi - 4\pi\rho\phi_{i,j}] = 0 \text{ with } \psi(x, y) = \sum_{i',j'=1}^{N} \psi_{i',j'}\phi_{i',j'}(x, y)$$

for the lattice of Problem 1.24, with its three independent lattice sites. Show that you get three coupled equations for the $\psi_{i,j}$ values (ψ_1, ψ_2, ψ_3) and solve to find the "Galerkin" approximations for the potential at these sites. Compare with the exact values and the results of the various iterations of Problem 1.24c. Comment.

$$[\psi = 4\pi\epsilon_0\Phi].$$