# CHAPTER 3

# *Boundary-Value Problems in Electrostatics: II*

In this chapter the discussion of boundary-value problems is continued. Spherical and cylindrical geometries are first considered, and solutions of the Laplace equation are represented by expansions in series of the appropriate orthonormal functions. Only an outline is given of the solution of the various ordinary differential equations obtained from the Laplace equation by separation of variables, but the properties of the different functions are summarized.

The problem of construction of Green functions in terms of orthonormal functions arises naturally in the attempt to solve the Poisson equation in the various geometries. Explicit examples of Green functions are obtained and applied to specific problems, and the equivalence of the various approaches to potential problems is discussed.

## *3.1 Laplace Equation in Spherical Coordinates*

In spherical coordinates $(r, \theta, \phi)$, shown in Fig. 3.1, the Laplace equation can be written in the form:

$$\frac{1}{r}\frac{\partial^2}{\partial r^2}(r\Phi) + \frac{1}{r^2 \sin\theta}\frac{\partial}{\partial\theta}\left(\sin\theta\frac{\partial\Phi}{\partial\theta}\right) + \frac{1}{r^2\sin^2\theta}\frac{\partial^2\Phi}{\partial\phi^2} = 0 \tag{3.1}$$

If a product form for the potential is assumed, then it can be written:

$$\Phi = \frac{U(r)}{r}P(\theta)Q(\phi) \tag{3.2}$$

When this is substituted into (3.1), there results the equation:

$$PQ\frac{d^2U}{dr^2} + \frac{UQ}{r^2\sin\theta}\frac{d}{d\theta}\left(\sin\theta\frac{dP}{d\theta}\right) + \frac{UP}{r^2\sin^2\theta}\frac{d^2Q}{d\phi^2} = 0$$

If we multiply by $r^2\sin^2\theta/UPQ$, we obtain:

$$r^2\sin^2\theta\left[\frac{1}{U}\frac{d^2U}{dr^2} + \frac{1}{Pr^2\sin\theta}\frac{d}{d\theta}\left(\sin\theta\frac{dP}{d\theta}\right)\right] + \frac{1}{Q}\frac{d^2Q}{d\phi^2} = 0 \tag{3.3}$$

The $\phi$ dependence of the equation has now been isolated in the last term. Consequently that term must be a constant which we call $(-m^2)$:

$$\frac{1}{Q}\frac{d^2Q}{d\phi^2} = -m^2 \tag{3.4}$$

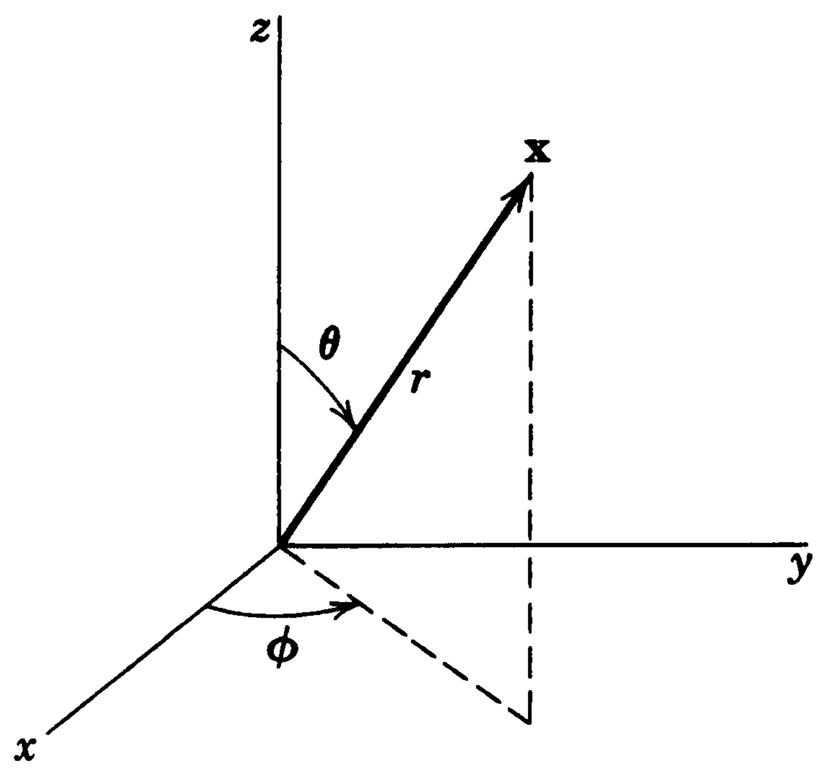


**Figure 3.1**

This has solutions

$$Q = e^{\pm im\phi} \tag{3.5}$$

For $Q$ to be single valued, $m$ must be an integer if the full azimuthal range is allowed. By similar considerations we find separate equations for $P(\theta)$ and $U(r)$:

$$\frac{1}{\sin\theta}\frac{d}{d\theta}\left(\sin\theta\frac{dP}{d\theta}\right) + \left[l(l+1) - \frac{m^2}{\sin^2\theta}\right]P = 0 \tag{3.6}$$

$$\frac{d^2U}{dr^2} - \frac{l(l+1)}{r^2}U = 0 \tag{3.7}$$

where $l(l+1)$ is another real constant.

From the form of the radial equation it is apparent that a single power of $r$ (rather than a power series) will satisfy it. The solution is found to be:

$$U = Ar^{l+1} + Br^{-l} \tag{3.8}$$

but $l$ is as yet undetermined.

## 3.2 *Legendre Equation and Legendre Polynomials*

The $\theta$ equation for $P(\theta)$ is customarily expressed in terms of $x = \cos\theta$, instead of $\theta$ itself. Then it takes the form:

$$\frac{d}{dx}\left[(1-x^2)\frac{dP}{dx}\right] + \left[l(l+1) - \frac{m^2}{1-x^2}\right]P = 0 \tag{3.9}$$

This equation is called the generalized Legendre equation, and its solutions are the associated Legendre functions. Before considering (3.9) we outline the solution by power series of the ordinary Legendre differential equation with $m^2 = 0$;

$$\frac{d}{dx}\left[(1-x^2)\frac{dP}{dx}\right] + l(l+1)P = 0 \tag{3.10}$$

We assume that the whole range of $\cos\theta$, including the north and south poles, is in the region of interest. The desired solution should then be single valued, finite, and continuous on the interval $-1 \le x \le 1$ in order that it represent a physical

potential. The solution will be assumed to be represented by a power series of the form:

$$P(x) = x^{\alpha} \sum_{j=0}^{\infty} a_j x^j \tag{3.11}$$

where $\alpha$ is a parameter to be determined. When this is substituted into (3.10), there results the series:

$$\sum_{j=0}^{\infty} \{(\alpha + j)(\alpha + j - 1)a_j x^{\alpha+j-2} - [(\alpha + j)(\alpha + j + 1) - l(l + 1)]a_j x^{\alpha+j}\} = 0 \tag{3.12}$$

In this expansion the coefficient of each power of $x$ must vanish separately. For $j = 0, 1$ we find that

$$\left.\begin{aligned} &\text{if } a_0 \neq 0, \text{ then } \alpha(\alpha - 1) = 0 \\ &\text{if } a_1 \neq 0, \text{ then } \alpha(\alpha + 1) = 0 \end{aligned}\right\} \tag{3.13}$$

while for a general $j$ value

$$a_{j+2} = \left[\frac{(\alpha + j)(\alpha + j + 1) - l(l + 1)}{(\alpha + j + 1)(\alpha + j + 2)}\right] a_j \tag{3.14}$$

A moment's thought shows that the two relations (3.13) are equivalent and that it is sufficient to choose *either* $a_0$ or $a_1$ different from zero, but not both. Making the former choice, we have $\alpha = 0$ or $\alpha = 1$. From (3.14) we see that the power series has only even powers of $x$ ($\alpha = 0$) or only odd powers of $x$ ($\alpha = 1$).

For either of the series $\alpha = 0$ or $\alpha = 1$ it is possible to prove the following properties:

the series converges for $x^2 < 1$, regardless of the value of $l$;

the series diverges at $x = \pm 1$, unless it terminates.

Since we want a solution that is finite at $x = \pm 1$, as well as for $x^2 < 1$, we demand that the series terminate. Since $\alpha$ and $j$ are positive integers or zero, the recurrence relation (3.14) will terminate only if *$l$ is zero or a positive integer*. Even then only one of the two series converges at $x = \pm 1$. If $l$ is even (odd), then only the $\alpha = 0$ ($\alpha = 1$) series terminates.* The polynomials in each case have $x^l$ as their highest power of $x$, the next highest being $x^{l-2}$, and so on, down to $x^0(x)$ for $l$ even (odd). By convention these polynomials are normalized to have the value unity at $x = +1$ and are called the *Legendre polynomials* of order $l$, $P_l(x)$. The first few Legendre polynomials are:

$$\left.\begin{aligned} P_0(x) &= 1 \\ P_1(x) &= x \\ P_2(x) &= \tfrac{1}{2}(3x^2 - 1) \\ P_3(x) &= \tfrac{1}{2}(5x^3 - 3x) \\ P_4(x) &= \tfrac{1}{8}(35x^4 - 30x^2 + 3) \end{aligned}\right\} \tag{3.15}$$

*For example, if $l = 0$ the $\alpha = 1$ series has a general coefficient $a_j = a_0/(j + 1)$ for $j = 0, 2, 4, \ldots$. Thus the series is $a_0(x + \frac{1}{3}x^3 + \frac{1}{5}x^5 + \cdots)$. This is just $a_0$ times the power series expansion of a function $Q_0(x) = \frac{1}{2}\ln(1 + x)/(1 - x)$, which clearly diverges at $x = \pm 1$. For each $l$ value there is a similar function $Q_l(x)$ with logarithms in it as the partner to the well-behaved polynomial solution. See *Magnus et al.* (pp. 151 ff). *Whittaker and Watson* (Chapter XV) give a treatment using analytic functions.

By manipulation of the power series solutions (3.11) and (3.14) it is possible to obtain a compact representation of the Legendre polynomials, known as *Rodrigues' formula*:

$$P_l(x) = \frac{1}{2^l l!} \frac{d^l}{dx^l} (x^2 - 1)^l \tag{3.16}$$

[See, for example, *Arfken*.]

The Legendre polynomials form a complete orthogonal set of functions on the interval $-1 \leq x \leq 1$. To prove the orthogonality we can appeal directly to the differential equation (3.10). We write down the differential equation for $P_l(x)$, multiply by $P_{l'}(x)$, and then integrate over the interval:

$$\int_{-1}^{1} P_{l'}(x) \left\{ \frac{d}{dx} \left[ (1 - x^2) \frac{dP_l}{dx} \right] + l(l + 1)P_l(x) \right\} dx = 0 \tag{3.17}$$

Integrating the first term by parts, we obtain

$$\int_{-1}^{1} \left[ (x^2 - 1) \frac{dP_l}{dx} \frac{dP_{l'}}{dx} + l(l + 1)(P_{l'}(x)P_l(x) \right] dx = 0 \tag{3.18}$$

If we now write down (3.18) with $l$ and $l'$ interchanged and subtract it from (3.18), the result is the orthogonality condition:

$$[l(l + 1) - l'(l' + 1)] \int_{-1}^{1} P_{l'}(x)P_l(x)\, dx = 0 \tag{3.19}$$

For $l \neq l'$, the integral must vanish. For $l = l'$, the integral is finite. To determine its value it is necessary to use an explicit representation of the Legendre polynomials, e.g., Rodrigues' formula. Then the integral is explicitly:

$$N_l \equiv \int_{-1}^{1} [P_l(x)]^2\, dx = \frac{1}{2^{2l}(l!)^2} \int_{-1}^{1} \frac{d^l}{dx^l} (x^2 - 1)^l \frac{d^l}{dx^l} (x^2 - 1)^l\, dx$$

Integration by parts $l$ times yields the result:

$$N_l = \frac{(-1)^l}{2^{2l}(l!)^2} \int_{-1}^{1} (x^2 - 1)^l \frac{d^{2l}}{dx^{2l}} (x^2 - 1)^l\, dx$$

The differentiation $2l$ times of $(x^2 - 1)^l$ yields the constant $(2l)!$, so that

$$N_l = \frac{(2l)!}{2^{2l}(l!)^2} \int_{-1}^{1} (1 - x^2)^l\, dx$$

The remaining integral can be done by brute force, but also by induction. We write the integrand as

$$(1 - x^2)^l = (1 - x^2)(1 - x^2)^{l-1} = (1 - x^2)^{l-1} + \frac{x}{2l} \frac{d}{dx} (1 - x^2)^l$$

Thus we have

$$N_l = \left( \frac{2l - 1}{2l} \right) N_{l-1} + \frac{(2l - 1)!}{2^{2l}(l!)^2} \int_{-1}^{1} x\, d[(1 - x^2)^l]$$

Integration by parts in the last integral yields

$$N_l = \left(\frac{2l - 1}{2l}\right) N_{l-1} - \frac{1}{2l} N_l$$

or

$$(2l + 1)N_l = (2l - 1)N_{l-1} \tag{3.20}$$

This shows that $(2l + 1)N_l$ is independent of $l$. For $l = 0$, with $P_0(x) = 1$, we have $N_0 = 2$. Thus $N_l = 2/(2l + 1)$ and the orthogonality condition can be written:

$$\int_{-1}^{1} P_{l'}(x)P_l(x)\, dx = \frac{2}{2l + 1}\, \delta_{l'l} \tag{3.21}$$

and the orthonormal functions in the sense of Section 2.8 are

$$U_l(x) = \sqrt{\frac{2l + 1}{2}}\, P_l(x) \tag{3.22}$$

Since the Legendre polynomials form a complete set of orthogonal functions, any function $f(x)$ on the interval $-1 \le x \le 1$ can be expanded in terms of them. The Legendre series representation is:

$$f(x) = \sum_{l=0}^{\infty} A_l P_l(x) \tag{3.23}$$

where

$$A_l = \frac{2l + 1}{2} \int_{-1}^{1} f(x)P_l(x)\, dx \tag{3.24}$$

As an example, consider the function shown in Fig. 3.2:

$$\begin{aligned} f(x) &= +1 \qquad \text{for } x > 0 \\ &= -1 \qquad \text{for } x < 0 \end{aligned}$$

Then

$$A_l = \frac{2l + 1}{2} \left[ \int_0^1 P_l(x)\, dx - \int_{-1}^{0} P_l(x)\, dx \right]$$

Since $P_l(x)$ is odd (even) about $x = 0$ if $l$ is odd (even), only the odd $l$ coefficients are different from zero. Thus, for $l$ odd,

$$A_l = (2l + 1) \int_0^1 P_l(x)\, dx \tag{3.25}$$

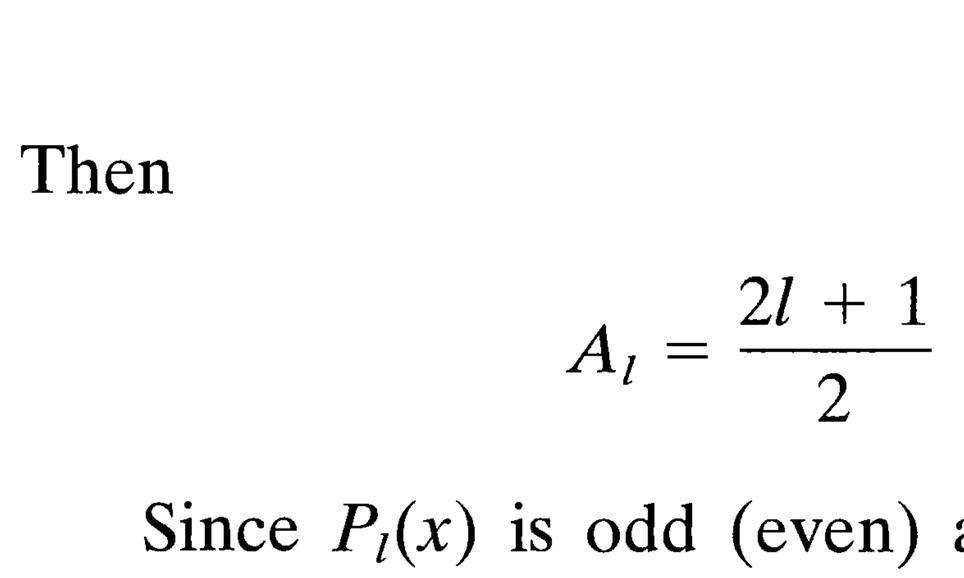


**Figure 3.2**

By means of Rodrigues' formula the integral can be evaluated, yielding

$$A_l = (-\tfrac{1}{2})^{(l-1)/2} \frac{(2l+1)(l-2)!!}{2\left(\dfrac{l+1}{2}\right)!} \tag{3.26}$$

where $(2n+1)!! \equiv (2n+1)(2n-1)(2n-3)\cdots \times 5 \times 3 \times 1$. Thus the series for $f(x)$ is:

$$f(x) = \tfrac{3}{2}P_1(x) - \tfrac{7}{8}P_3(x) + \tfrac{11}{16}P_5(x) - \cdots \tag{3.27}$$

Certain recurrence relations among Legendre polynomials of different order are useful in evaluating integrals, generating higher order polynomials from lower order ones, etc. From Rodrigues' formula it is a straightforward matter to show that

$$\frac{dP_{l+1}}{dx} - \frac{dP_{l-1}}{dx} - (2l+1)P_l = 0 \tag{3.28}$$

This result, combined with differential equation (3.10), can be made to yield various recurrence formulas, some of which are:

$$\begin{gathered}(l+1)P_{l+1} - (2l+1)xP_l + lP_{l-1} = 0 \\ \frac{dP_{l+1}}{dx} - x\frac{dP_l}{dx} - (l+1)P_l = 0 \\ (x^2-1)\frac{dP_l}{dx} - lxP_l + lP_{l-1} = 0\end{gathered} \tag{3.29}$$

As an illustration of the use of these recurrence formulas, consider the evaluation of the integral:

$$I_1 = \int_{-1}^{1} xP_l(x)P_{l'}(x)\,dx \tag{3.30}$$

From the first of the recurrence formulas (3.29) we obtain an expression for $xP_l(x)$. Therefore (3.30) becomes

$$I_1 = \frac{1}{2l+1}\int_{-1}^{1} P_{l'}(x)[(l+1)P_{l+1}(x) + lP_{l-1}(x)]\,dx$$

The orthogonality integral (3.21) can now be employed to show that the integral vanishes unless $l' = l \pm 1$, and that, for those values,

$$\int_{-1}^{1} xP_l(x)P_{l'}(x)\,dx = \begin{cases} \dfrac{2(l+1)}{(2l+1)(2l+3)}, & l' = l+1 \\[2ex] \dfrac{2l}{(2l-1)(2l+1)}, & l' = l-1 \end{cases} \tag{3.31}$$

These are really the same result with the roles of $l$ and $l'$ interchanged. In a similar manner it is easy to show that

$$\int_{-1}^{1} x^2 P_l(x) P_{l'}(x)\, dx = \begin{cases} \dfrac{2(l+1)(l+2)}{(2l+1)(2l+3)(2l+5)}, & l' = l+2 \\ \dfrac{2(2l^2+2l-1)}{(2l-1)(2l+1)(2l+3)}, & l' = l \end{cases} \tag{3.32}$$

where it is assumed that $l' \geq l$.

## 3.3 Boundary-Value Problems with Azimuthal Symmetry

From the form of the solution of the Laplace equation in spherical coordinates (3.2), it will be seen that for a problem possessing azimuthal symmetry $m = 0$ in (3.5). This means that the general solution for such a problem is:

$$\Phi(r, \theta) = \sum_{l=0}^{\infty} [A_l r^l + B_l r^{-(l+1)}] P_l(\cos\theta) \tag{3.33}$$

The coefficients $A_l$ and $B_l$ can be determined from the boundary conditions. Suppose that the potential is specified to be $V(\theta)$ on the surface of a sphere of radius $a$, and it is required to find the potential inside the sphere. If there are no charges at the origin, the potential must be finite there. Consequently $B_l = 0$ for all $l$. The coefficients $A_l$ are found by evaluating (3.33) on the surface of the sphere:

$$V(\theta) = \sum_{l=0}^{\infty} A_l a^l P_l(\cos\theta) \tag{3.34}$$

This is just a Legendre series of the form (3.23), so that the coefficients $A_l$ are:

$$A_l = \frac{2l+1}{2a^l} \int_0^{\pi} V(\theta) P_l(\cos\theta) \sin\theta\, d\theta \tag{3.35}$$

If, for example, $V(\theta)$ is that of Section 2.7, with two hemispheres at equal and opposite potentials,

$$V(\theta) = \begin{cases} +V, & (0 \leq \theta < \pi/2) \\ -V, & (\pi/2 < \theta \leq \pi) \end{cases}$$

then the coefficients are proportional to those in (3.27). Thus the potential inside the sphere is

$$\Phi(r, \theta) = V\left[\frac{3}{2}\frac{r}{a} P_1(\cos\theta) - \frac{7}{8}\left(\frac{r}{a}\right)^3 P_3(\cos\theta) + \frac{11}{16}\left(\frac{r}{a}\right)^5 P_5(\cos\theta) \cdots\right] \tag{3.36}$$

To find the potential outside the sphere we merely replace $(r/a)^l$ by $(a/r)^{l+1}$. The resulting potential can be seen to be the same as (2.27), obtained by another means.

Series (3.33), with its coefficients determined by the boundary conditions, is a unique expansion of the potential. This uniqueness provides a means of ob-

taining the solution of potential problems from a knowledge of the potential in a limited domain, namely on the symmetry axis. On the symmetry axis (3.33) becomes (with $z = r$):

$$\Phi(z = r) = \sum_{l=0}^{\infty} [A_l r^l + B_l r^{-(l+1)}] \tag{3.37}$$

valid for positive $z$. For negative $z$ each term must be multiplied by $(-1)^l$. Suppose that, by some means, we can evaluate the potential $\Phi(z)$ on the symmetry axis. If this potential function can be expanded in a power series in $z = r$ of the form (3.37), with known coefficients, then the solution for the potential at any point in space is obtained by multiplying each power of $r^l$ and $r^{-(l+1)}$ by $P_l(\cos\theta)$.

At the risk of boring the reader, we return to the problem of the hemispheres at equal and opposite potentials. We have already obtained the series solution in two different ways, (2.27) and (3.36). The method just stated gives a third way. For a point on the axis we have found the closed form (2.22):

$$\Phi(z = r) = V\left[1 - \frac{r^2 - a^2}{r\sqrt{r^2 + a^2}}\right]$$

This can be expanded in powers of $a^2/r^2$:

$$\Phi(z = r) = \frac{V}{\sqrt{\pi}} \sum_{j=1}^{\infty} (-1)^{j-1} \frac{(2j - \frac{1}{2})\Gamma(j - \frac{1}{2})}{j!} \left(\frac{a}{r}\right)^{2j}$$

Comparison with expansion (3.37) shows that only odd $l$ values ($l = 2j - 1$) enter. The solution, valid for all points outside the sphere, is consequently:

$$\Phi(r, \theta) = \frac{V}{\sqrt{\pi}} \sum_{j=1}^{\infty} (-1)^{j-1} \frac{(2j - \frac{1}{2})\Gamma(j - \frac{1}{2})}{j!} \left(\frac{a}{r}\right)^{2j} P_{2j-1}(\cos\theta)$$

This is the same solution as already obtained, (2.27) and (3.36).

An important expansion is that of the potential at $\mathbf{x}$ due to a unit point charge at $\mathbf{x}'$:

$$\frac{1}{|\mathbf{x} - \mathbf{x}'|} = \sum_{l=0}^{\infty} \frac{r_<^l}{r_>^{l+1}} P_l(\cos\gamma) \tag{3.38}$$

where $r_<$ ($r_>$) is the smaller (larger) of $|\mathbf{x}|$ and $|\mathbf{x}'|$, and $\gamma$ is the angle between $\mathbf{x}$ and $\mathbf{x}'$, as shown in Fig. 3.3. This can be proved by rotating axes so that $\mathbf{x}'$ lies

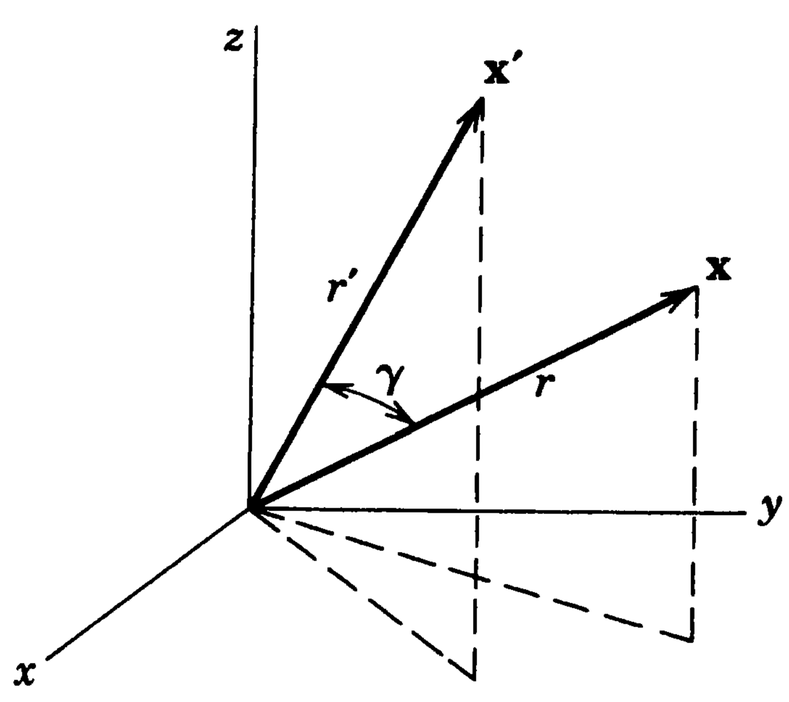


**Figure 3.3**

along the $z$ axis. Then the potential satisfies the Laplace equation, possesses azimuthal symmetry, and can be expanded according to (3.33), except at the point $\mathbf{x} = \mathbf{x}'$:

$$\frac{1}{|\mathbf{x} - \mathbf{x}'|} = \sum_{l=0}^{\infty} (A_l r^l + B_l r^{-(l+1)}) P_l(\cos\gamma)$$

If the point $\mathbf{x}$ is on the $z$ axis. the right-hand side reduces to (3.37), while the left-hand side becomes:

$$\frac{1}{|\mathbf{x} - \mathbf{x}'|} \equiv \frac{1}{(r^2 + r'^2 - 2rr'\cos\gamma)^{1/2}} \rightarrow \frac{1}{|r - r'|}$$

Expanding, we find, for $\mathbf{x}$ on axis,

$$\frac{1}{|\mathbf{x} - \mathbf{x}'|} = \frac{1}{r_>} \sum_{l=0}^{\infty} \left(\frac{r_<}{r_>}\right)^l$$

For points off the axis it is only necessary, according to (3.33) and (3.37), to multiply each term by $P_l(\cos\gamma)$. This proves the general result (3.38).

Another example is the potential due to a total charge $q$ uniformly distributed around a circular ring of radius $a$, located as shown in Fig. 3.4, with its axis the $z$ axis and its center at $z = b$. The potential at a point $P$ on the axis of symmetry with $z = r$ is just $q/4\pi\epsilon_0$ divided by the distance $AP$:

$$\Phi(z = r) = \frac{1}{4\pi\epsilon_0} \frac{q}{(r^2 + c^2 - 2cr\cos\alpha)^{1/2}}$$

where $c^2 = a^2 + b^2$ and $\alpha = \tan^{-1}(a/b)$. The inverse distance $AP$ can be expanded using (3.38). Thus, for $r > c$,

$$\Phi(z = r) = \frac{q}{4\pi\epsilon_0} \sum_{l=0}^{\infty} \frac{c^l}{r^{l+1}} P_l(\cos\alpha)$$

For $r < c$, the corresponding form is:

$$\Phi(z = r) = \frac{q}{4\pi\epsilon_0} \sum_{l=0}^{\infty} \frac{r^l}{c^{l+1}} P_l(\cos\alpha)$$

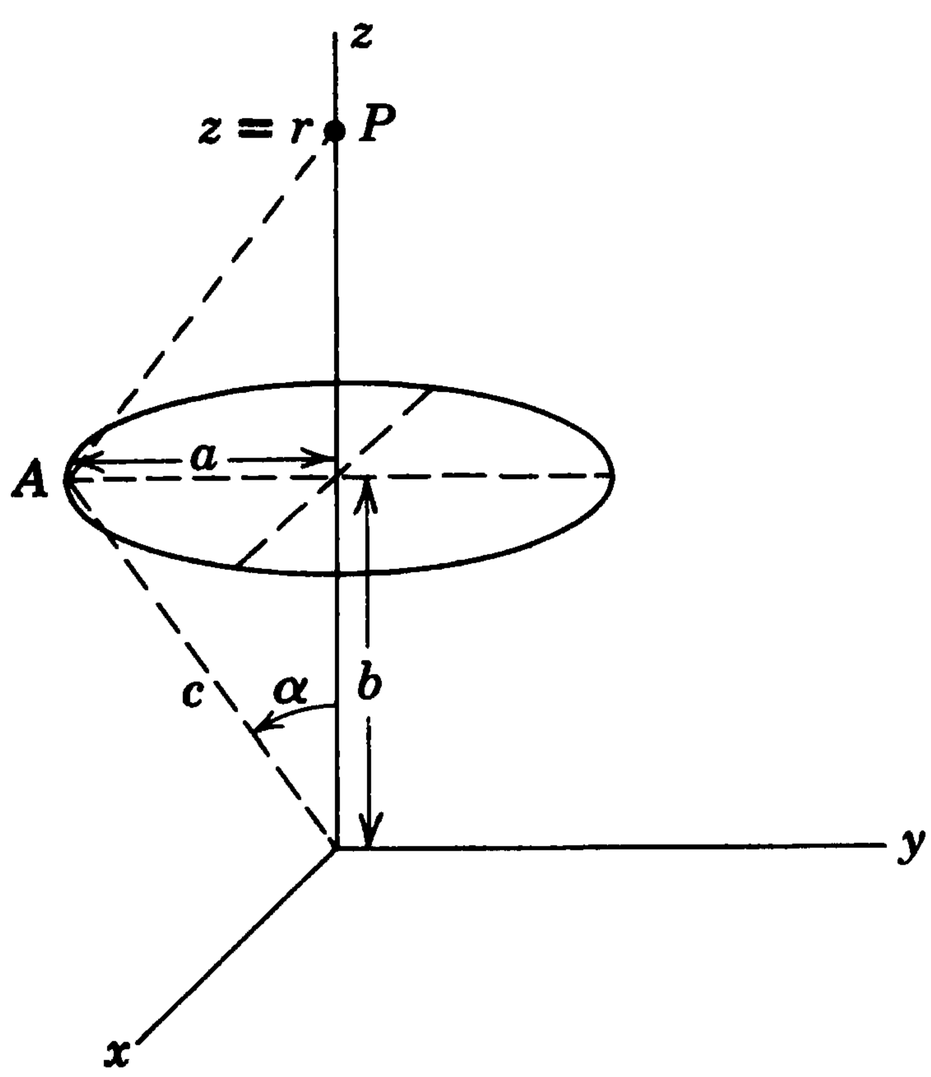


**Figure 3.4** Ring of charge of radius $a$ and total charge $q$ located on the $z$ axis with center at $z = b$.

The potential at *any point* in space is now obtained by multiplying each member of these series by $P_l(\cos\theta)$:

$$\Phi(r, \theta) = \frac{q}{4\pi\epsilon_0} \sum_{l=0}^{\infty} \frac{r_<^l}{r_>^{l+1}} P_l(\cos\alpha) P_l(\cos\theta)$$

where $r_<$ ($r_>$) is the smaller (larger) of $r$ and $c$.

## 3.4 *Behavior of Fields in a Conical Hole or Near a Sharp Point*

Before turning to more complicated boundary-value problems, we consider one with azimuthal symmetry, but with only a limited range of $\theta$. This is a three-dimensional analog of the situation discussed in Section 2.11. Suppose that the limited angular region, $0 \le \theta \le \beta$, $0 \le \phi \le 2\pi$, is bounded by a conical conducting surface, as indicated in Fig. 3.5. For $\beta < \pi/2$, the region can be thought of as a deep conical hole bored in a conductor. For $\beta > \pi/2$, the region of space is that surrounding a pointed conical conductor.

The treatment of Section 3.2 for the Legendre differential equation needs modification. With the assumption of azimuth symmetry, (3.10) is still applicable, but we now seek solutions finite and single-valued on the range of $x = \cos\theta$ of $\cos\beta \le x \le 1$. Furthermore, since the conducting surface $\theta = \beta$ is at fixed potential, which we can take to be zero, the solution in $\cos\theta$ must vanish at $\theta = \beta$ to satisfy the boundary conditions. Since we demand regularity at $x = 1$ it is convenient to make a series expansion around $x = 1$ instead of $x = 0$, as was done with (3.11). With the introduction of the variable

$$\xi = \tfrac{1}{2}(1 - x)$$

the Legendre equation (3.10) becomes

$$\frac{d}{d\xi}\left[\xi(1 - \xi)\frac{dP}{d\xi}\right] + \nu(\nu + 1)P = 0 \tag{3.39}$$

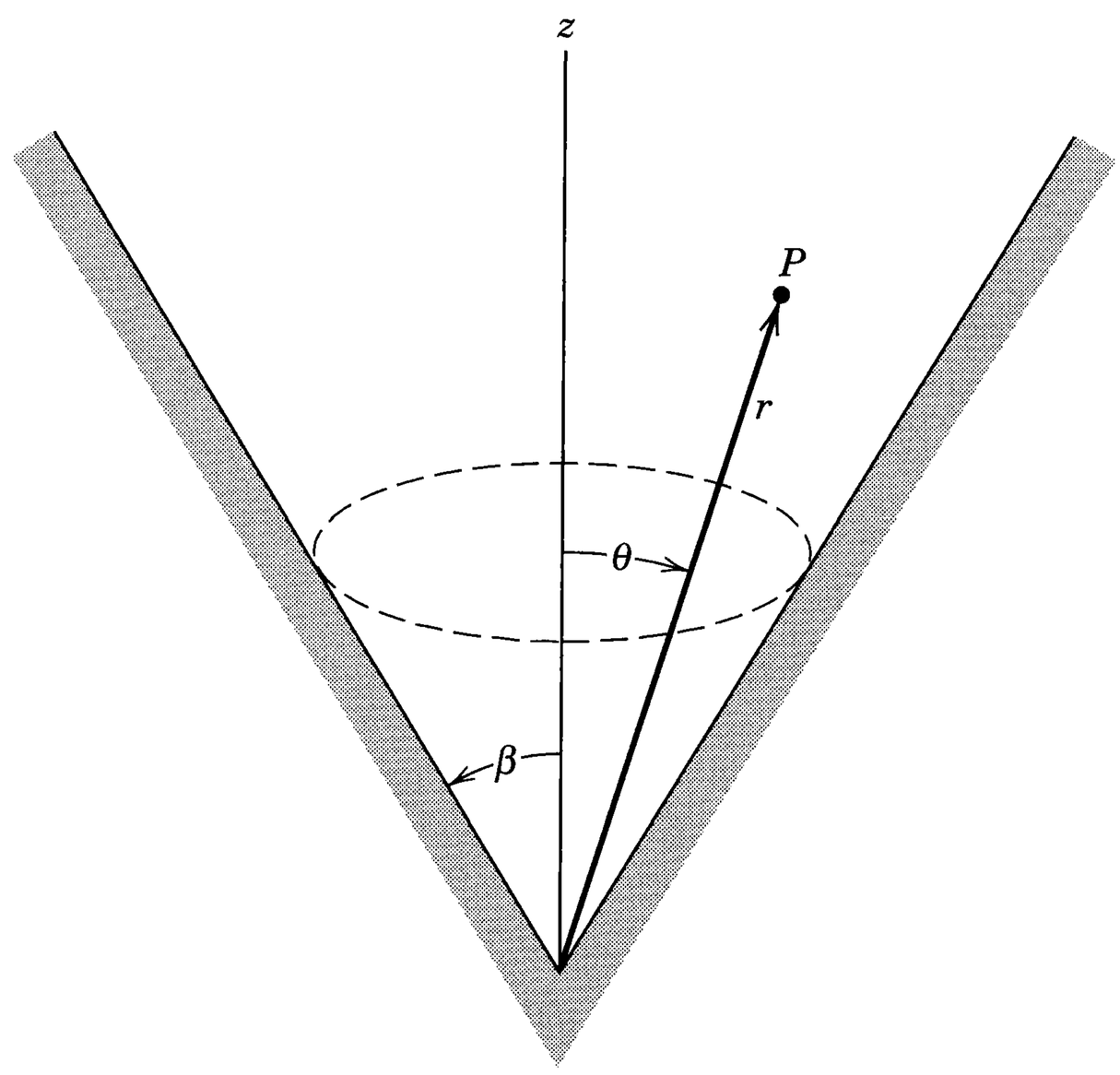


**Figure 3.5**

where $l$ has been replaced by $\nu$ to avoid confusion. The corresponding radial solutions for $U(r)/r$ in (3.2) are $r^\nu$ and $r^{-\nu-1}$. With a power series solution,

$$P(\xi) = \xi^\alpha \sum_{j=0}^{\infty} a_j \xi^j$$

substituted into (3.39), the vanishing of the coefficient of the lowest power of $\xi$ requires $\alpha = 0$. The recursion relation between successive coefficients in the series is then

$$\frac{a_{j+1}}{a_j} = \frac{(j - \nu)(j + \nu + 1)}{(j + 1)^2} \tag{3.40}$$

Choosing $a_0 = 1$ to normalize the solution to unity at $\xi = 0$ ($\cos\theta = 1$), we have the series representation

$$P_\nu(\xi) = 1 + \frac{(-\nu)(\nu + 1)}{1!\ 1!}\xi + \frac{(-\nu)(-\nu + 1)(\nu + 1)(\nu + 2)}{2!\ 2!}\xi^2 + \cdots \tag{3.41}$$

We first observe that if $\nu$ is zero or a positive integer the series terminates. The reader can verify that for $\nu = l = 0, 1, 2, \ldots$, the series (3.41) is exactly the Legendre *polynomials* (3.15). For $\nu$ not equal to an integer, (3.41) represents a generalization and is called a *Legendre function of the first kind and order* $\nu$. The series (3.41) is an example of a hypergeometric function ${}_2F_1(a, b; c; z)$ whose series expansion is

$${}_2F_1(a, b; c; z) = 1 + \frac{ab}{c}\frac{z}{1!} + \frac{a(a + 1)b(b + 1)}{c(c + 1)}\frac{z^2}{2!} + \cdots$$

Comparison with (3.41) shows that the Legendre function can be written

$$P_\nu(x) = {}_2F_1\left(-\nu, \nu + 1; 1; \frac{1 - x}{2}\right) \tag{3.42}$$

Here we have returned to our customary variable $x = \cos\theta$. The properties of the hypergeometric functions are well known (see *Morse and Feshbach*, Chapter 5, *Dennery and Krzywicki*, Sections IV.16–18, *Whittaker and Watson*, Chapter XIV). The Legendre function $P_\nu(x)$ is regular at $x = 1$ and for $|x| < 1$, but is singular at $x = -1$ unless $\nu$ is an integer. Depending on the value of $\nu$, it has a certain number of zeros on the range $|x| < 1$. Since the polynomial $P_l(x)$ has $l$ zeros for $|x| < 1$, we anticipate that for real $\nu$ more and more zeros occur as $\nu$ gets larger and larger. Furthermore, the zeros are distributed more or less uniformly on the interval. In particular, the first zero moves closer and closer to $x = 1$ as $\nu$ increases.

The basic solution to the Laplace boundary-value problem of Fig. 3.5 is

$$Ar^\nu P_\nu(\cos\theta)$$

where $\nu > 0$ is required for a finite potential at the origin. Since the potential must vanish at $\theta = \beta$ for all $r$, it is necessary that

$$P_\nu(\cos\beta) = 0 \tag{3.43}$$

This is an eigenvalue condition on $\nu$. From what was just stated about the zeros of $P_\nu$ it is evident that (3.43) has an infinite number of solutions, $\nu = \nu_k$

($k = 1, 2, \ldots$), which we arrange in order of increasing magnitude. For $\nu = \nu_1$, $x = \cos\beta$ is the first zero of $P_{\nu_1}(x)$. For $\nu = \nu_2$, $x = \cos\beta$ is the second zero of $P_{\nu_2}(x)$, and so on. The complete solution for the azimuthally symmetric potential in the region $0 \le \theta \le \beta$ is*

$$\Phi(r, \theta) = \sum_{k=1}^{\infty} A_k r^{\nu_k} P_{\nu_k}(\cos\theta) \tag{3.44}$$

In the spirit of Section 2.11 we are interested in the general behavior of the potential and fields in the neighborhood of $r = 0$ and not in the full solution with specific boundary conditions imposed at large $r$. Thus we approximate the behavior of the potential near $r = 0$ by the first term in (3.44) and write

$$\Phi(r, \theta) \simeq A r^{\nu} P_{\nu}(\cos\theta) \tag{3.45}$$

where now $\nu$ is the *smallest root* of (3.43). The components of electric field and the surface-charge density on the conical conductor are

$$\left.\begin{aligned} E_r &= -\frac{\partial\Phi}{\partial r} \simeq -\nu A r^{\nu-1} P_{\nu}(\cos\theta) \\ E_\theta &= -\frac{1}{r}\frac{\partial\Phi}{\partial\theta} \simeq A r^{\nu-1} \sin\theta P'_{\nu}(\cos\theta) \\ \sigma(r) &= -\frac{1}{4\pi} E_\theta\big|_{\theta=\beta} \simeq -\frac{A}{4\pi} r^{\nu-1} \sin\beta P'_{\nu}(\cos\beta) \end{aligned}\right\} \tag{3.46}$$

Here the prime on $P_\nu$ denotes differential with respect to its argument. The fields and charge density all vary as $r^{\nu-1}$ as $r \to 0$.

The order $\nu$ for the first zero of $P_\nu(\cos\beta)$ is plotted as a function of $\beta$ in Fig. 3.6. Obviously, for $\beta \ll 1$, $\nu \gg 1$. An approximate expression for $\nu$ in this domain can be obtained from the Bessel function approximation,†

$$P_\nu(\cos\theta) \simeq J_0\left((2\nu + 1)\sin\frac{\theta}{2}\right) \tag{3.47}$$

valid for large $\nu$ and $\theta < 1$. The first zero of $J_0(x)$ is at $x = 2.405$. This gives

$$\nu \simeq \frac{2.405}{\beta} - \frac{1}{2} \tag{3.48a}$$

Since $|\mathbf{E}|$ and $\sigma$ vary as $r^{\nu-1}$ there are evidently very small fields and very little charge deep in a conical hole as $\beta \to 0$. For $\beta = \pi/2$, the conical conductor becomes a plane. There $\nu = 1$ and $\sigma \propto 1$, as expected. For $\beta > \pi/2$, the geometry is that of a conical point. Then $\nu < 1$ and the field is singular at $r = 0$. For $\beta \to \pi$, $\nu \to 0$, but rather slowly. An approximation for $(\pi - \beta)$ small is

$$\nu \simeq \left[2\ln\left(\frac{2}{\pi - \beta}\right)\right]^{-1} \tag{3.48b}$$

This shows that for $(\pi - \beta) \simeq 10°$, $\nu \simeq 0.2$ and even for $(\pi - \beta) \simeq 1°$, $\nu \simeq 0.1$. In any event, for a narrow conical point the fields near the point vary as $r^{-1+\epsilon}$

*The orthogonality of the functions $P_{\nu_k}(\cos\theta)$ on the interval $\cos\beta \le x \le 1$ can be shown in the same way as for $P_l(\cos\theta)$—see (3.17)–(3.19). Completeness can also be shown.

†Bessel functions are discussed in Section 3.7.

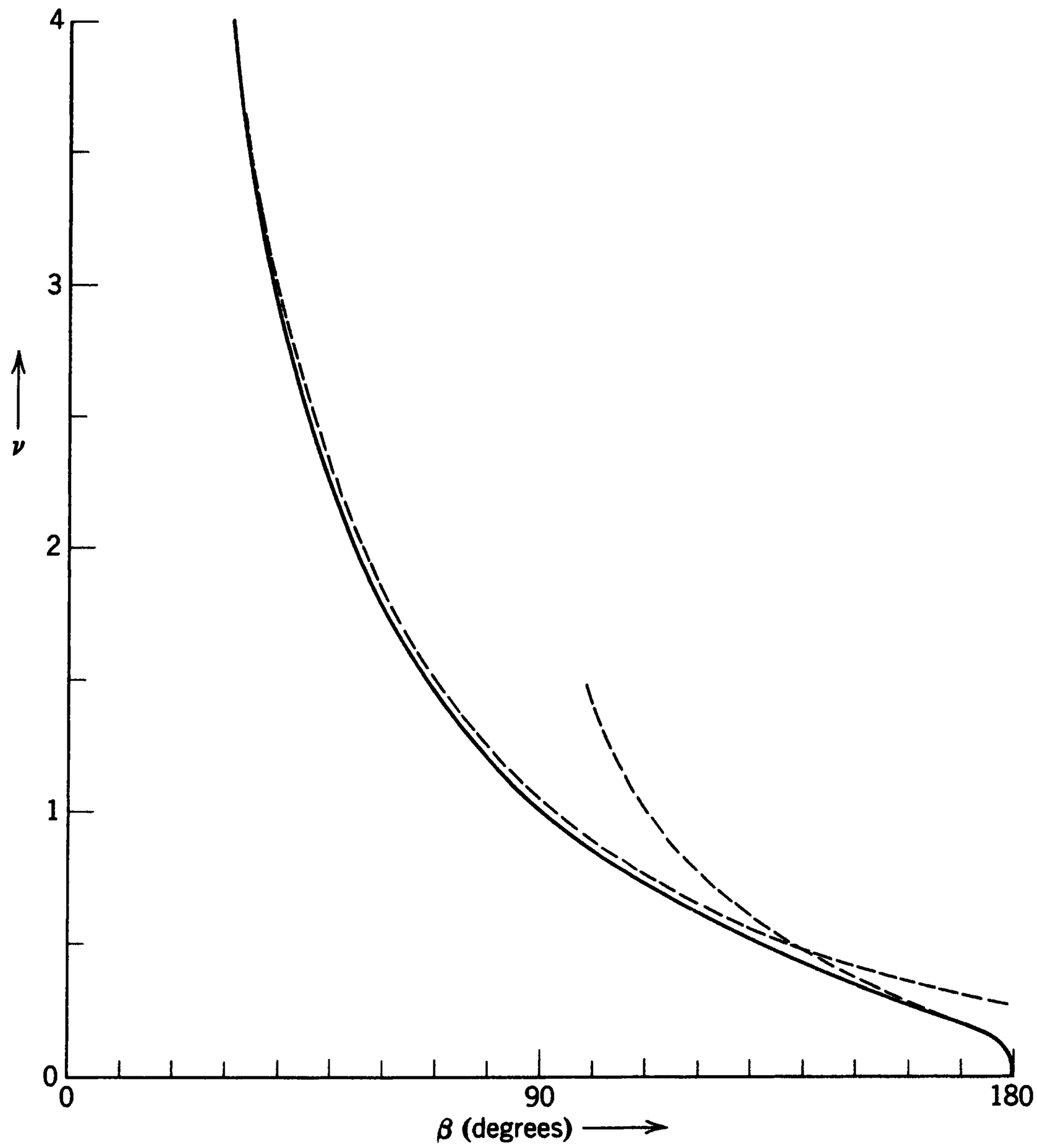


**Figure 3.6** The order parameter $\nu$ for the first zero of $P_\nu(\cos\beta)$ versus $\beta$. The range $0 < \beta < 90°$ corresponds to a conical hole, while $90° < \beta < 180°$ represents a conical point. Near $r = 0$ the fields and surface-charge density are proportional to $r^{\nu-1}$. The dashed curves are the approximate expressions, (3.48a) and (3.48b).

where $\epsilon \ll 1$. Very high fields exist around the point. The efficacy of such points in lightning rods is discussed in Section 2.11.

An extended discussion of potential problems of this general kind by R. N. Hall [*J. Appl. Phys.* **20,** 925 (1949)] includes graphs for a number of the roots $\nu_k$ of (3.43) as functions of $\beta$.

## *3.5 Associated Legendre Functions and the Spherical Harmonics $Y_{lm}(\theta, \phi)$*

So far we have dealt with potential problems possessing azimuthal symmetry with solutions of the form (3.33). Unless the range in $\theta$ is restricted, as in Section 3.4, these involve only ordinary Legendre polynomials. The general potential problem can, however, have azimuthal variations so that $m \neq 0$ in (3.5) and (3.9). Then we need the generalization of $P_l(\cos\theta)$, namely, the solution of (3.9) with $l$ and $m$ both arbitrary. In essentially the same manner as for the ordinary Legendre functions it can be shown that to have finite solutions on the interval $-1 \leq x \leq 1$, the parameter $l$ *must be zero or a positive integer* and the *integer* $m$ can take on only the values $-l, -(l-1), \ldots, 0, \ldots, (l-1), l$. The solution

having these properties is called an associated Legendre function $P_l^m(x)$. For positive $m$ it is defined by the formula*:

$$P_l^m(x) = (-1)^m(1 - x^2)^{m/2} \frac{d^m}{dx^m} P_l(x) \tag{3.49}$$

If Rodrigues' formula is used to represent $P_l(x)$, a definition valid for both positive and negative $m$ is obtained:

$$P_l^m(x) = \frac{(-1)^m}{2^l l!} (1 - x^2)^{m/2} \frac{d^{l+m}}{dx^{l+m}} (x^2 - 1)^l \tag{3.50}$$

$P_l^{-m}(x)$ and $P_l^m(x)$ are proportional, since the differential equation (3.9) depends only on $m^2$ and $m$ is an integer. It can be shown that

$$P_l^{-m}(x) = (-1)^m \frac{(l - m)!}{(l + m)!} P_l^m(x) \tag{3.51}$$

For fixed $m$ the functions $P_l^m(x)$ form an orthogonal set in the index $l$ on the interval $-1 \leq x \leq 1$. By the same means as for the Legendre functions the orthogonality relation can be obtained:

$$\int_{-1}^{1} P_{l'}^m(x) P_l^m(x)\, dx = \frac{2}{2l + 1} \frac{(l + m)!}{(l - m)!} \delta_{l'l} \tag{3.52}$$

The solution of the Laplace equation was decomposed into a product of factors for the three variables $r$, $\theta$, and $\phi$. It is convenient to combine the angular factors and construct orthonormal functions over the unit sphere. We will call these functions *spherical harmonics*, although this terminology is often reserved for solutions of the generalized Legendre equation (3.9). Our spherical harmonics are sometimes called "tesseral harmonics" in older books. The functions $Q_m(\phi) = e^{im\phi}$ form a complete set of orthogonal functions in the index $m$ on the interval $0 \leq \phi \leq 2\pi$. The functions $P_l^m(\cos\theta)$ form a similar set in the index $l$ for each $m$ value on the interval $-1 \leq \cos\theta \leq 1$. Therefore their product $P_l^m Q_m$ will form a complete orthogonal set on the surface of the unit sphere in the two indices $l$, $m$. From the normalization condition (3.52) it is clear that the suitably normalized functions, denoted by $Y_{lm}(\theta, \phi)$, are

$$Y_{lm}(\theta, \phi) = \sqrt{\frac{2l + 1}{4\pi} \frac{(l - m)!}{(l + m)!}}\, P_l^m(\cos\theta) e^{im\phi} \tag{3.53}$$

From (3.51) it can be seen that

$$Y_{l,-m}(\theta, \phi) = (-1)^m Y_{lm}^*(\theta, \phi) \tag{3.54}$$

The normalization and orthogonality conditions are

$$\int_0^{2\pi} d\phi \int_0^{\pi} \sin\theta\, d\theta\, Y_{l'm'}^*(\theta, \phi) Y_{lm}(\theta, \phi) = \delta_{l'l}\delta_{m'm} \tag{3.55}$$

The completeness relation, equivalent to (2.35), is

$$\sum_{l=0}^{\infty} \sum_{m=-l}^{l} Y_{lm}^*(\theta', \phi') Y_{lm}(\theta, \phi) = \delta(\phi - \phi')\delta(\cos\theta - \cos\theta') \tag{3.56}$$

*The choice of phase for $P_l^m(x)$ is that of *Magnus et al.* and E. U. Condon and G. H. Shortley in *Theory of Atomic Spectra*, Cambridge University Press (1953). For explicit expressions and recursion formulas, see *Magnus et al.*, Section 4.3.

For a few small $l$ values and $m \geq 0$ the list below shows the explicit form of the $Y_{lm}(\theta, \phi)$. For negative $m$ values (3.54) can be used.

SPHERICAL HARMONICS $Y_{lm}(\theta, \phi)$

$$l = 0 \qquad Y_{00} = \frac{1}{\sqrt{4\pi}}$$

$$l = 1 \quad \begin{cases} Y_{11} = -\sqrt{\dfrac{3}{8\pi}} \sin\theta e^{i\phi} \\ Y_{10} = \sqrt{\dfrac{3}{4\pi}} \cos\theta \end{cases}$$

$$l = 2 \quad \begin{cases} Y_{22} = \dfrac{1}{4}\sqrt{\dfrac{15}{2\pi}} \sin^2\theta e^{2i\phi} \\ Y_{21} = -\sqrt{\dfrac{15}{8\pi}} \sin\theta \cos\theta e^{i\phi} \\ Y_{20} = \sqrt{\dfrac{5}{4\pi}} (\tfrac{3}{2}\cos^2\theta - \tfrac{1}{2}) \end{cases}$$

$$l = 3 \quad \begin{cases} Y_{33} = -\dfrac{1}{4}\sqrt{\dfrac{35}{4\pi}} \sin^3\theta e^{3i\phi} \\ Y_{32} = \dfrac{1}{4}\sqrt{\dfrac{105}{2\pi}} \sin^2\theta \cos\theta e^{2i\phi} \\ Y_{31} = -\dfrac{1}{4}\sqrt{\dfrac{21}{4\pi}} \sin\theta\,(5\cos^2\theta - 1) e^{i\phi} \\ Y_{30} = \sqrt{\dfrac{7}{4\pi}} (\tfrac{5}{2}\cos^3\theta - \tfrac{3}{2}\cos\theta) \end{cases}$$

Note that, for $m = 0$,

$$Y_{l0}(\theta, \phi) = \sqrt{\frac{2l+1}{4\pi}}\, P_l(\cos\theta) \tag{3.57}$$

An arbitrary function $g(\theta, \phi)$ can be expanded in spherical harmonics:

$$g(\theta, \phi) = \sum_{l=0}^{\infty} \sum_{m=-l}^{l} A_{lm} Y_{lm}(\theta, \phi) \tag{3.58}$$

where the coefficients are

$$A_{lm} = \int d\Omega\, Y^*_{lm}(\theta, \phi) g(\theta, \phi)$$

A point of interest to us in the next section is the form of the expansion for $\theta = 0$. With definition (3.57), we find:

$$[g(\theta, \phi)]_{\theta=0} = \sum_{l=0}^{\infty} \sqrt{\frac{2l+1}{4\pi}}\, A_{l0} \tag{3.59}$$

where

$$A_{l0} = \sqrt{\frac{2l+1}{4\pi}} \int d\Omega\, P_l(\cos\theta) g(\theta, \phi) \tag{3.60}$$

All terms in the series with $m \neq 0$ vanish at $\theta = 0$.

The general solution for a boundary-value problem in spherical coordinates can be written in terms of spherical harmonics and powers of $r$ in a generalization of (3.33):

$$\Phi(r, \theta, \phi) = \sum_{l=0}^{\infty} \sum_{m=-l}^{l} [A_{lm} r^l + B_{lm} r^{-(l+1)}] Y_{lm}(\theta, \phi) \tag{3.61}$$

If the potential is specified on a spherical surface, the coefficients can be determined by evaluating (3.61) on the surface and using (3.58).

## 3.6 *Addition Theorem for Spherical Harmonics*

A mathematical result of considerable interest and use is called the *addition theorem* for spherical harmonics. Two coordinate vectors $\mathbf{x}$ and $\mathbf{x}'$, with spherical coordinates $(r, \theta, \phi)$ and $(r', \theta', \phi')$, respectively, have an angle $\gamma$ between them, as shown in Fig. 3.7. The addition theorem expresses a Legendre polynomial of order $l$ in the angle $\gamma$ in terms of products of the spherical harmonics of the angles $\theta$, $\phi$ and $\theta'$, $\phi'$:

$$P_l(\cos\gamma) = \frac{4\pi}{2l+1} \sum_{m=-l}^{l} Y^*_{lm}(\theta', \phi') Y_{lm}(\theta, \phi) \tag{3.62}$$

where $\cos\gamma = \cos\theta\cos\theta' + \sin\theta\sin\theta'\cos(\phi - \phi')$. To prove this theorem we consider the vector $\mathbf{x}'$ as fixed in space. Then $P_l(\cos\gamma)$ is a function of the angles $\theta$, $\phi$, with the angles $\theta'$, $\phi'$ as parameters. It may be expanded in a series (3.58):

$$P_l(\cos\gamma) = \sum_{l'=0}^{\infty} \sum_{m=-l'}^{l'} A_{l'm}(\theta', \phi') Y_{l'm}(\theta, \phi) \tag{3.63}$$

Comparison with (3.62) shows that only terms with $l' = l$ appear. To see why this is so, note that if coordinate axes are chosen so that $\mathbf{x}'$ is on the $z$ axis, then $\gamma$ becomes the usual polar angle and $P_l(\cos\gamma)$ satisfies the equation:

$$\nabla'^2 P_l(\cos\gamma) + \frac{l(l+1)}{r^2} P_l(\cos\gamma) = 0 \tag{3.64}$$

where $\nabla'^2$ is the Laplacian referred to these new axes. If the axes are now rotated to the position shown in Fig. 3.7, $\nabla'^2 = \nabla^2$ and $r$ is unchanged.* Consequently $P_l(\cos\gamma)$ still satisfies an equation of the form (3.64); i.e., it is a spherical harmonic of order $l$. This means that it is a linear combination of $Y_{lm}$'s of that order only:

$$P_l(\cos\gamma) = \sum_{m=-l}^{l} A_m(\theta', \phi') Y_{lm}(\theta, \phi) \tag{3.65}$$

The coefficients $A_m(\theta', \phi')$ are given by

$$A_m(\theta', \phi') = \int Y^*_{lm}(\theta, \phi) P_l(\cos\gamma)\, d\Omega \tag{3.66}$$

*The proof that $\nabla'^2 = \nabla^2$ under rotations follows most easily from noting that $\nabla^2\psi = \nabla \cdot \nabla\psi$ is an operator scalar product and that all scalar products are invariant under rotations.

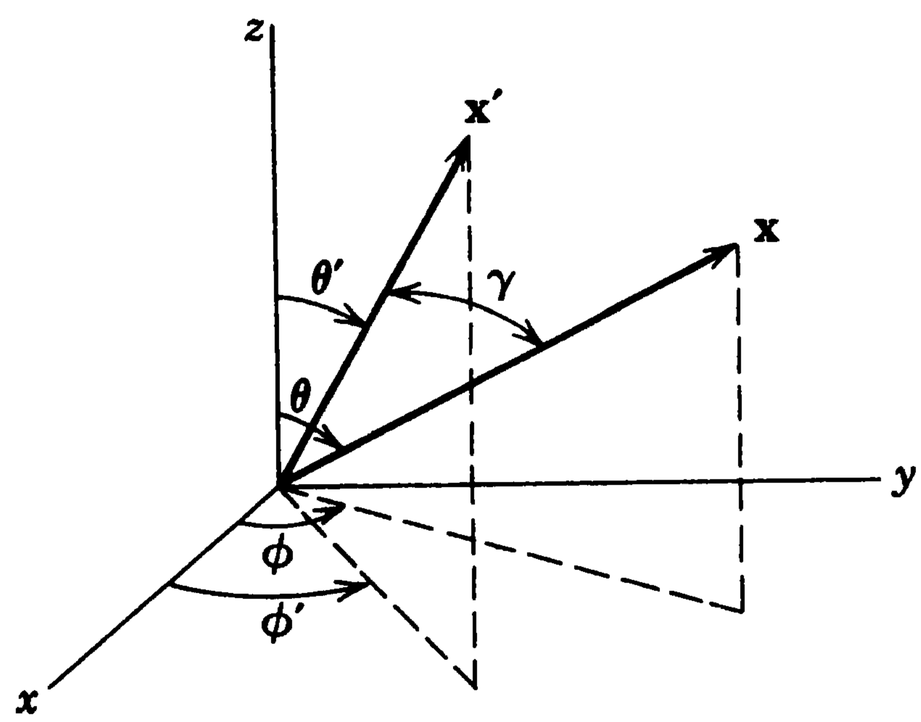


Figure 3.7

To evaluate this coefficient we note that it may be viewed, according to (3.60), as the $m' = 0$ coefficient in an expansion of the function $\sqrt{4\pi/(2l+1)}\, Y^*_{lm}(\theta, \phi)$ in a series of $Y_{lm'}(\gamma, \beta)$ referred to the primed axis of (3.64). From (3.59) it is then found that, since only one $l$ value is present, coefficient (3.66) is

$$A_m(\theta', \phi') = \frac{4\pi}{2l+1} \{Y^*_{lm}[\theta(\gamma, \beta), \phi(\gamma, \beta)]\}_{\gamma=0} \tag{3.67}$$

In the limit $\gamma \to 0$, the angles $(\theta, \phi)$, as functions of $(\gamma, \beta)$, go over into $(\theta', \phi')$. Thus addition theorem (3.62) is proved. Sometimes the theorem is written in terms of $P_l^m(\cos\theta)$ rather than $Y_{lm}$. Then it has the form:

$$\begin{aligned} P_l(\cos\gamma) = {} & P_l(\cos\theta)P_l(\cos\theta') \\ & + 2\sum_{m=1}^{l} \frac{(l-m)!}{(l+m)!} P_l^m(\cos\theta)P_l^m(\cos\theta') \cos[m(\phi - \phi')] \end{aligned} \tag{3.68}$$

If the angle $\gamma$ goes to zero, there results a "sum rule" for the squares of $Y_{lm}$'s:

$$\sum_{m=-l}^{l} |Y_{lm}(\theta, \phi)|^2 = \frac{2l+1}{4\pi} \tag{3.69}$$

The addition theorem can be used to put expansion (3.38) of the potential at $\mathbf{x}$ due to a unit charge at $\mathbf{x}'$ into its most explicit form. Substituting (3.62) for $P_l(\cos\gamma)$ into (3.38), we obtain

$$\frac{1}{|\mathbf{x} - \mathbf{x}'|} = 4\pi \sum_{l=0}^{\infty} \sum_{m=-l}^{l} \frac{1}{2l+1} \frac{r_<^l}{r_>^{l+1}} Y^*_{lm}(\theta', \phi') Y_{lm}(\theta, \phi) \tag{3.70}$$

Equation (3.70) gives the potential in a completely factorized form in the coordinates $\mathbf{x}$ and $\mathbf{x}'$. This is useful in any integrations over charge densities, etc., where one variable is the variable of integration and the other is the coordinate of the observation point. The price paid is that there is a double sum rather than a single term.

## 3.7 *Laplace Equation in Cylindrical Coordinates; Bessel Functions*

In cylindrical coordinates $(\rho, \phi, z)$, as shown in Fig. 3.8, the Laplace equation takes the form:

$$\frac{\partial^2\Phi}{\partial\rho^2} + \frac{1}{\rho}\frac{\partial\Phi}{\partial\rho} + \frac{1}{\rho^2}\frac{\partial^2\Phi}{\partial\phi^2} + \frac{\partial^2\Phi}{\partial z^2} = 0 \tag{3.71}$$

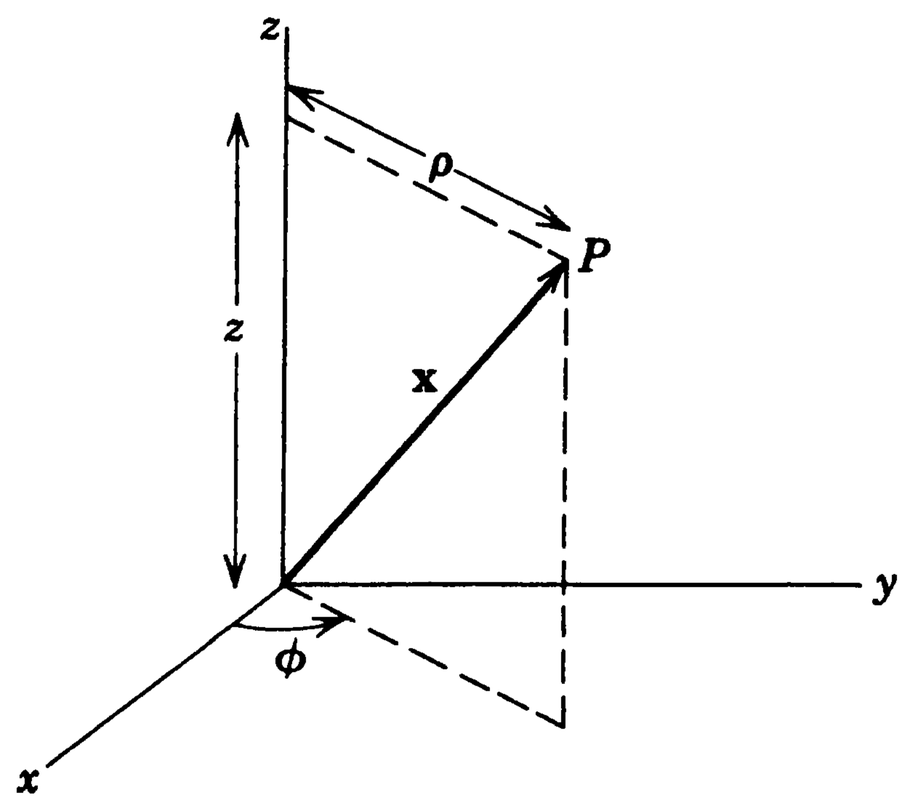


**Figure 3.8**

The separation of variables is accomplished by the substitution:

$$\Phi(\rho, \phi, z) = R(\rho)Q(\phi)Z(z) \tag{3.72}$$

In the usual way this leads to the three ordinary differential equations:

$$\frac{d^2Z}{dz^2} - k^2Z = 0 \tag{3.73}$$

$$\frac{d^2Q}{d\phi^2} + \nu^2Q = 0 \tag{3.74}$$

$$\frac{d^2R}{d\rho^2} + \frac{1}{\rho}\frac{dR}{d\rho} + \left(k^2 - \frac{\nu^2}{\rho^2}\right)R = 0 \tag{3.75}$$

The solutions of the first two equations are elementary:

$$\begin{aligned} Z(z) &= e^{\pm kz} \\ Q(\phi) &= e^{\pm i\nu\phi} \end{aligned} \tag{3.76}$$

For the potential to be single-valued when the full azimuth is allowed, $\nu$ must be an integer. But barring some boundary-condition requirement in the $z$ direction, the parameter $k$ is arbitrary. For the present we assume that $k$ is real and positive.

The radial equation can be put in a standard form by the change of variable $x = k\rho$. Then it becomes

$$\frac{d^2R}{dx^2} + \frac{1}{x}\frac{dR}{dx} + \left(1 - \frac{\nu^2}{x^2}\right)R = 0 \tag{3.77}$$

This is the Bessel equation, and the solutions are called *Bessel functions* of order $\nu$. If a power series solution of the form

$$R(x) = x^\alpha \sum_{j=0}^{\infty} a_j x^j \tag{3.78}$$

is assumed, then it is found that

$$\alpha = \pm\nu \tag{3.79}$$

and

$$a_{2j} = -\frac{1}{4j(j + \alpha)} a_{2j-2} \tag{3.80}$$

for $j = 1, 2, 3, \ldots$. All odd powers of $x^j$ have vanishing coefficients. The recursion formula can be iterated to obtain

$$a_{2j} = \frac{(-1)^j \Gamma(\alpha + 1)}{2^{2j} j!\, \Gamma(j + \alpha + 1)} a_0 \tag{3.81}$$

It is conventional to choose the constant $a_0 = [2^\alpha \Gamma(\alpha + 1)]^{-1}$. Then the two solutions are

$$J_\nu(x) = \left(\frac{x}{2}\right)^\nu \sum_{j=0}^{\infty} \frac{(-1)^j}{j!\, \Gamma(j + \nu + 1)} \left(\frac{x}{2}\right)^{2j} \tag{3.82}$$

$$J_{-\nu}(x) = \left(\frac{x}{2}\right)^{-\nu} \sum_{j=0}^{\infty} \frac{(-1)^j}{j!\, \Gamma(j - \nu + 1)} \left(\frac{x}{2}\right)^{2j} \tag{3.83}$$

These solutions are called Bessel functions of the first kind of order $\pm\nu$. The series converge for all finite values of $x$. If $\nu$ *is not an integer*, these two solutions $J_{\pm\nu}(x)$ form a pair of linearly independent solutions to the second-order Bessel equation. However, if $\nu$ is an integer, it is well known that the solutions are linearly dependent. In fact, for $\nu = m$, an integer, it can be seen from the series representation that

$$J_{-m}(x) = (-1)^m J_m(x) \tag{3.84}$$

Consequently it is necessary to find another linearly independent solution when $\nu$ is an integer. It is customary, even if $\nu$ is not an integer, to replace the pair $J_{\pm\nu}(x)$ by $J_\nu(x)$ and $N_\nu(x)$, the Neumann function (or Bessel function of the second kind):

$$N_\nu(x) = \frac{J_\nu(x) \cos \nu\pi - J_{-\nu}(x)}{\sin \nu\pi} \tag{3.85}$$

For $\nu$ not an integer, $N_\nu(x)$ is clearly linearly independent of $J_\nu(x)$. In the limit $\nu \to$ integer, it can be shown that $N_\nu(x)$ is still linearly independent of $J_\nu(x)$. As expected, it involves $\log x$. Its series representation is given in the reference books.

The Bessel functions of the third kind, called *Hankel functions*, are defined as linear combinations of $J_\nu(x)$ and $N_\nu(x)$:

$$\left.\begin{aligned} H_\nu^{(1)}(x) &= J_\nu(x) + iN_\nu(x) \\ H_\nu^{(2)}(x) &= J_\nu(x) - iN_\nu(x) \end{aligned}\right\} \tag{3.86}$$

The Hankel functions form a fundamental set of solutions to the Bessel equation, just as do $J_\nu(x)$ and $N_\nu(x)$.

The functions $J_\nu$, $N_\nu$, $H_\nu^{(1)}$, $H_\nu^{(2)}$ all satisfy the recursion formulas

$$\Omega_{\nu-1}(x) + \Omega_{\nu+1}(x) = \frac{2\nu}{x} \Omega_\nu(x) \tag{3.87}$$

$$\Omega_{\nu-1}(x) - \Omega_{\nu+1}(x) = 2 \frac{d\Omega_\nu(x)}{dx} \tag{3.88}$$

where $\Omega_\nu(x)$ is any one of the cylinder functions of order $\nu$. These may be verified directly from the series representation (3.82).

For reference purposes, the limiting forms of the various kinds of Bessel function are given for small and large values of their argument. For simplicity, we show only the leading terms:

$$x \ll 1 \qquad J_\nu(x) \to \frac{1}{\Gamma(\nu+1)}\left(\frac{x}{2}\right)^\nu \tag{3.89}$$

$$N_\nu(x) \to \begin{cases} \dfrac{2}{\pi}\left[\ln\left(\dfrac{x}{2}\right) + 0.5772\cdots\right], & \nu = 0 \\ -\dfrac{\Gamma(\nu)}{\pi}\left(\dfrac{2}{x}\right)^\nu & \nu \neq 0 \end{cases} \tag{3.90}$$

In these formulas $\nu$ is assumed to be real and nonnegative.

$$x \gg 1,\ \nu \qquad J_\nu(x) \to \sqrt{\frac{2}{\pi x}}\cos\left(x - \frac{\nu\pi}{2} - \frac{\pi}{4}\right) \tag{3.91}$$

$$N_\nu(x) \to \sqrt{\frac{2}{\pi x}}\sin\left(x - \frac{\nu\pi}{2} - \frac{\pi}{4}\right)$$

The transition from the small $x$ behavior to the large $x$ asymptotic form occurs in the region of $x \sim \nu$.

From the asymptotic forms (3.91) it is clear that each Bessel function has an infinite number of roots. We will be chiefly concerned with the roots of $J_\nu(x)$:

$$J_\nu(x_{\nu n}) = 0 \qquad (n = 1, 2, 3, \ldots) \tag{3.92}$$

$x_{\nu n}$ is the $n$th root of $J_\nu(x)$. For the first few integer values of $\nu$, the first three roots are:

$$\begin{aligned} \nu &= 0, & x_{0n} &= 2.405,\ 5.520,\ \ 8.654, \ldots \\ \nu &= 1, & x_{1n} &= 3.832,\ 7.016,\ 10.173, \ldots \\ \nu &= 2, & x_{2n} &= 5.136,\ 8.417,\ 11.620, \ldots \end{aligned}$$

For higher roots, the asymptotic formula

$$x_{\nu n} \simeq n\pi + (\nu - \tfrac{1}{2})\frac{\pi}{2}$$

gives adequate accuracy (to at least three figures). Tables of roots are given in *Jahnke, Emde, and Lösch* (p. 194) and *Abramowitz and Stegun* (p. 409).

Having found the solution of the radial part of the Laplace equation in terms of Bessel functions, we can now ask in what sense the Bessel functions form an orthogonal, complete set of functions. We consider only Bessel functions of the first kind, and we show that $\sqrt{\rho}\, J_\nu(x_{\nu n}\rho/a)$, for fixed $\nu \geq 0$, $n = 1, 2, \ldots$, form an orthogonal set on the interval $0 \leq \rho \leq a$. The demonstration starts with the differential equation satisfied by $J_\nu(x_{\nu n}\rho/a)$:

$$\frac{1}{\rho}\frac{d}{d\rho}\left[\rho\frac{dJ_\nu\left(x_{\nu n}\dfrac{\rho}{a}\right)}{d\rho}\right] + \left(\frac{x_{\nu n}^2}{a^2} - \frac{\nu^2}{\rho^2}\right)J_\nu\left(x_{\nu n}\frac{\rho}{a}\right) = 0 \tag{3.93}$$

If we multiply the equation by $\rho J_\nu(x_{\nu n'}\rho/a)$ and integrate from 0 to $a$, we obtain

$$\int_0^a J_\nu\left(x_{\nu n'}\frac{\rho}{a}\right)\frac{d}{d\rho}\left[\rho\frac{dJ_\nu\left(x_{\nu n}\frac{\rho}{a}\right)}{d\rho}\right]d\rho + \int_0^a\left(\frac{x_{\nu n}^2}{a^2}-\frac{\nu^2}{\rho^2}\right)\rho J_\nu\left(x_{\nu n'}\frac{\rho}{a}\right)J_\nu\left(x_{\nu n}\frac{\rho}{a}\right)d\rho = 0$$

Integration by parts, combined with the vanishing of $(\rho J_\nu J_\nu')$ at $\rho = 0$ (for $\nu \geq 0$) and $\rho = a$, leads to the result:

$$-\int_0^a \rho\frac{dJ_\nu\left(x_{\nu n'}\frac{\rho}{a}\right)}{d\rho}\frac{dJ_\nu\left(x_{\nu n}\frac{\rho}{a}\right)}{d\rho}d\rho + \int_0^a\left(\frac{x_{\nu n}^2}{a^2}-\frac{\nu^2}{\rho^2}\right)\rho J_\nu\left(x_{\nu n'}\frac{\rho}{a}\right)J_\nu\left(x_{\nu n}\frac{\rho}{a}\right)d\rho = 0$$

If we now write down the same expression, with $n$ and $n'$ interchanged, and subtract, we obtain the orthogonality condition:

$$(x_{\nu n}^2 - x_{\nu n'}^2)\int_0^a \rho J_\nu\left(x_{\nu n'}\frac{\rho}{a}\right)J_\nu\left(x_{\nu n}\frac{\rho}{a}\right)d\rho = 0 \tag{3.94}$$

Adroit use of the differential equation, and the recursion formulas (3.87) and (3.88) leads to the normalization integral:

$$\int_0^a \rho J_\nu\left(x_{\nu n'}\frac{\rho}{a}\right)J_\nu\left(x_{\nu n}\frac{\rho}{a}\right)d\rho = \frac{a^2}{2}\left[J_{\nu+1}(x_{\nu n})\right]^2\delta_{n'n} \tag{3.95}$$

Assuming that the set of Bessel functions is complete, we can expand an arbitrary function of $\rho$ on the interval $0 \leq \rho \leq a$ in a Fourier–Bessel series:

$$f(\rho) = \sum_{n=1}^{\infty} A_{\nu n}J_\nu\left(x_{\nu n}\frac{\rho}{a}\right) \tag{3.96}$$

where

$$A_{\nu n} = \frac{2}{a^2J_{\nu+1}^2(x_{\nu n})}\int_0^a \rho f(\rho)J_\nu\left(\frac{x_{\nu n}\rho}{a}\right)d\rho \tag{3.97}$$

Our derivation of (3.96) involved the restriction $\nu \geq 0$. Actually it can be proved to hold for all $\nu \geq -1$.

Expansion (3.96) and (3.97) is the conventional Fourier–Bessel series and is particularly appropriate to functions that vanish at $\rho = a$ (e.g., homogeneous Dirichlet boundary conditions on a cylinder; see the following section). But it will be noted that an alternative expansion is possible in a series of functions $\sqrt{\rho}\,J_\nu(y_{\nu n}\rho/a)$ where $y_{\nu n}$ is the $n$th root of the equation $[dJ_\nu(x)]/dx = 0$. The reason is that, in proving the orthogonality of the functions, all that is demanded is that the quantity $[\rho J_\nu(k\rho)(d/d\rho)J_\nu(k'\rho) - \rho J_\nu(k'\rho)(d/d\rho)J_\nu(k\rho)]$ vanish at the end points $\rho = 0$ and $\rho = a$. The requirement is met by $\lambda = x_{\nu n}/a$ *or* $\lambda = y_{\nu n}/a$, where $J_\nu(x_{\nu n}) = 0$ and $J_\nu'(y_{\nu n}) = 0$, or, more generally, by $\rho(d/d\rho)J_\nu(k\rho) + \lambda J_\nu(k\rho) = 0$ at the end points, with $\lambda$ a constant independent of $k$. The expansion in terms of the set $\sqrt{\rho}\,J_\nu(y_{\nu n}\rho/a)$ is especially useful for functions with vanishing slope at $\rho = a$. (See Problem 3.11.)

A Fourier–Bessel series is only one type of expansion involving Bessel functions. Some of the other possibilities are:

Neumann series: $\sum_{n=0}^{\infty} a_n J_{\nu+n}(z)$

Kapteyn series: $\sum_{n=0}^{\infty} a_n J_{\nu+n}((\nu + n)z)$

Schlömilch series: $\sum_{n=1}^{\infty} a_n J_{\nu}(nx)$

The reader may refer to *Watson* (Chapters XVI–XIX) for a detailed discussion of the properties of these series. Kapteyn series occur in the discussion of the Kepler motion of planets and of radiation by rapidly moving charges (see Problems 14.14 and 14.15).

Before leaving the properties of Bessel functions, we note that if, in the separation of the Laplace equation, the separation constant $k^2$ in (3.73) had been taken as $-k^2$, then $Z(z)$ would have been $\sin kz$ or $\cos kz$ and the equation for $R(\rho)$ would have been:

$$\frac{d^2R}{d\rho^2} + \frac{1}{\rho}\frac{dR}{d\rho} - \left(k^2 + \frac{\nu^2}{\rho^2}\right)R = 0 \tag{3.98}$$

With $k\rho = x$, this becomes

$$\frac{d^2R}{dx^2} + \frac{1}{x}\frac{dR}{dx} - \left(1 + \frac{\nu^2}{x^2}\right)R = 0 \tag{3.99}$$

The solutions of this equation are called *modified Bessel functions*. It is evident that they are just Bessel functions of pure imaginary argument. The usual choices of linearly independent solutions are denoted by $I_\nu(x)$ and $K_\nu(x)$. They are defined by

$$I_\nu(x) = i^{-\nu} J_\nu(ix) \tag{3.100}$$

$$K_\nu(x) = \frac{\pi}{2} i^{\nu+1} H_\nu^{(1)}(ix) \tag{3.101}$$

and are real functions for real $x$ and $\nu$. Their limiting forms for small and large $x$ are, assuming real $\nu \geq 0$:

$$x \ll 1 \qquad I_\nu(x) \to \frac{1}{\Gamma(\nu + 1)}\left(\frac{x}{2}\right)^\nu \tag{3.102}$$

$$K_\nu(x) \to \begin{cases} -\left[\ln\left(\frac{x}{2}\right) + 0.5772\cdots\right], & \nu = 0 \\ \frac{\Gamma(\nu)}{2}\left(\frac{2}{x}\right)^\nu, & \nu \neq 0 \end{cases} \tag{3.103}$$

$$x \gg 1,\ \nu \qquad I_\nu(x) \to \frac{1}{\sqrt{2\pi x}} e^x\left[1 + 0\left(\frac{1}{x}\right)\right] \tag{3.104}$$

$$K_\nu(x) \to \sqrt{\frac{\pi}{2x}}\, e^{-x}\left[1 + 0\left(\frac{1}{x}\right)\right]$$

## 3.8 Boundary-Value Problems in Cylindrical Coordinates

The solution of the Laplace equation in cylindrical coordinates is $\Phi = R(\rho)Q(\phi)Z(z)$, where the separate factors are given in the previous section. Consider now the specific boundary-value problem shown in Fig. 3.9. The cylinder has a radius $a$ and a height $L$, the top and bottom surfaces being at $z = L$ and $z = 0$. The potential on the side and the bottom of the cylinder is zero, while the top has a potential $\Phi = V(\rho, \phi)$. We want to find the potential at any point inside the cylinder. In order that $\Phi$ be single valued and vanish at $z = 0$,

$$Q(\phi) = A \sin m\phi + B \cos m\phi$$
$$Z(z) = \sinh kz$$

where $\nu = m$ is an integer and $k$ is a constant to be determined. The radial factor is

$$R(\rho) = CJ_m(k\rho) + DN_m(k\rho)$$

If the potential is finite at $\rho = 0$, $D = 0$. The requirement that the potential vanish at $\rho = a$ means that $k$ can take on only those special values:

$$k_{mn} = \frac{x_{mn}}{a} \qquad (n = 1, 2, 3, \ldots)$$

where $x_{mn}$ are the roots of $J_m(x_{mn}) = 0$.

Combining all these conditions, we find that the general form of the solution is

$$\Phi(\rho, \phi, z) = \sum_{m=0}^{\infty} \sum_{n=1}^{\infty} J_m(k_{mn}\rho) \sinh(k_{mn}z)(A_{mn} \sin m\phi + B_{mn} \cos m\phi) \tag{3.105a}$$

At $z = L$, we are given the potential as $V(\rho, \phi)$. Therefore we have

$$V(\rho, \phi) = \sum_{m,n} \sinh(k_{mn}L)J_m(k_{mn}\rho)(A_{mn} \sin m\phi + B_{mn} \cos m\phi)$$

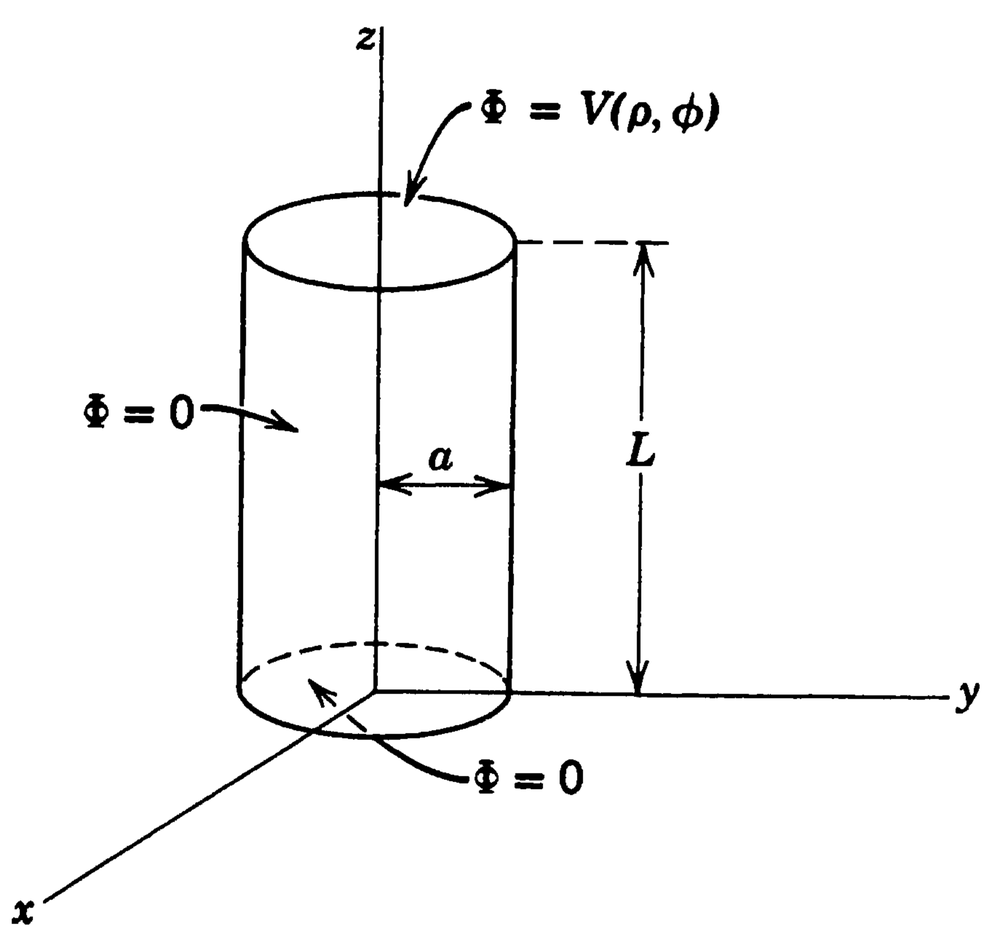


Figure 3.9

This is a Fourier series in $\phi$ and a Fourier–Bessel series in $\rho$. The coefficients are, from (2.37) and (3.97),

$$A_{mn} = \frac{2 \operatorname{cosech}(k_{mn}L)}{\pi a^2 J_{m+1}^2(k_{mn}a)} \int_0^{2\pi} d\phi \int_0^a d\rho\, \rho V(\rho, \phi) J_m(k_{mn}\rho) \sin m\phi$$

and (3.105b)

$$B_{mn} = \frac{2 \operatorname{cosech}(k_{mn}L)}{\pi a^2 J_{m+1}^2(k_{mn}a)} \int_0^{2\pi} d\phi \int_0^a d\rho\, \rho V(\rho, \phi) J_m(k_{mn}\rho) \cos m\phi$$

with the proviso that, for $m = 0$, we use $\frac{1}{2}B_{0n}$ in the series.

The particular form of expansion (3.105a) is dictated by the requirement that the potential vanish at $z = 0$ for arbitrary $\rho$ and at $\rho = a$ for arbitrary $z$. For different boundary conditions the expansion would take a different form. An example where the potential is zero on the end faces and equal to $V(\phi, z)$ on the side surface is left as Problem 3.9 for the reader.

The Fourier–Bessel series (3.105) is appropriate for a finite interval in $\rho$, $0 \le \rho \le a$. If $a \to \infty$, the series goes over into an integral in a manner entirely analogous to the transition from a trigonometric Fourier series to a Fourier integral. Thus, for example, if the potential in charge-free space is finite for $z \ge 0$ and vanishes for $z \to \infty$, the general form of the solution for $z \ge 0$ must be

$$\Phi(\rho, \phi, z) = \sum_{m=0}^{\infty} \int_0^{\infty} dk\, e^{-kz} J_m(k\rho)[A_m(k) \sin m\phi + B_m(k) \cos m\phi] \tag{3.106}$$

If the potential is specified over the whole plane $z = 0$ to be $V(\rho, \phi)$ the coefficients are determined by

$$V(\rho, \phi) = \sum_{m=0}^{\infty} \int_0^{\infty} dk\, J_m(k\rho)[A_m(k) \sin m\phi + B_m(k) \cos m\phi]$$

The variation in $\phi$ is just a Fourier series. Consequently the coefficients $A_m(k)$ and $B_m(k)$ are separately specified by the integral relations:

$$\frac{1}{\pi} \int_0^{2\pi} V(\rho, \phi) \begin{Bmatrix} \sin m\phi \\ \cos m\phi \end{Bmatrix} d\phi = \int_0^{\infty} J_m(k'\rho) \begin{Bmatrix} A_m(k') \\ B_m(k') \end{Bmatrix} dk' \tag{3.107}$$

These radial integral equations of the first kind can be easily solved, since they are *Hankel transforms*. For our purposes, the integral relation,

$$\int_0^{\infty} x J_m(kx) J_m(k'x)\, dx = \frac{1}{k}\, \delta(k' - k) \tag{3.108}$$

can be exploited to invert equations (3.107). Multiplying both sides by $\rho J_m(k\rho)$ and integrating over $\rho$, we find with the help of (3.108) that the coefficients are determined by integrals over the whole area of the plane $z = 0$:

$$\left.\begin{matrix} A_m(k) \\ B_m(k) \end{matrix}\right\} = \frac{k}{\pi} \int_0^{\infty} d\rho\, \rho \int_0^{2\pi} d\phi\, V(\rho, \phi) J_m(k\rho) \begin{Bmatrix} \sin m\phi \\ \cos m\phi \end{Bmatrix} \tag{3.109}$$

As usual, for $m = 0$, we must use $\frac{1}{2}B_0(k)$ in series (3.106).

While on the subject of expansions in terms of Bessel functions, we observe that the functions $J_\nu(kx)$ for fixed $\nu$, $\operatorname{Re}(\nu) > -1$, form a complete, orthogonal

(in $k$) set of functions on the interval, $0 < x < \infty$. For each $m$ value (and fixed $\phi$ and $z$), the expansion in $k$ in (3.106) is a special case of the expansion,

$$A(x) = \int_0^\infty \tilde{A}(k) J_\nu(kx)\, dk, \text{ where } \tilde{A}(k) = k \int_0^\infty x A(x) J_\nu(kx)\, dx \tag{3.110}$$

An important example of these expansions occurs in spherical coordinates, with spherical Bessel functions, $j_l(kr)$, $l = 0, 1, 2, \ldots$. For present purposes we merely note the definition,

$$j_l(z) = \sqrt{\frac{\pi}{2z}}\, J_{l+1/2}(z) \tag{3.111}$$

[Details of spherical Bessel functions may be found in Chapter 9.] The orthogonality relation (3.108) evidently becomes

$$\int_0^\infty r^2 j_l(kr) j_l(k'r)\, dr = \frac{\pi}{2k^2}\, \delta(k - k') \tag{3.112}$$

The completeness relation has the same form, with $r \to k$, $k \to r$, $k' \to r'$. The Fourier–spherical Bessel expansion for a given $l$ is then

$$A(r) = \int_0^\infty \tilde{A}(k) j_l(kr)\, dk, \text{ where } \tilde{A}(k) = \frac{2k^2}{\pi} \int_0^\infty r^2 A(r) j_l(kr)\, dr \tag{3.113}$$

Such expansions are useful for current decay in conducting media or time-dependent magnetic diffusion for which angular symmetry reduces consideration to one or a few $l$ values. See Problems 5.35 and 5.36.

## 3.9 *Expansion of Green Functions in Spherical Coordinates*

To handle problems involving distributions of charge as well as boundary values for the potential (i.e., solutions of the Poisson equation), it is necessary to determine the Green function $G(\mathbf{x}, \mathbf{x}')$ that satisfies the appropriate boundary conditions. Often these boundary conditions are specified on surfaces of some separable coordinate system (e.g., spherical or cylindrical boundaries). Then it is convenient to express the Green function as a series of products of the functions appropriate to the coordinates in question. We first illustrate the type of expansion involved by considering spherical coordinates.

For the case of no boundary surfaces, except at infinity, we already have the expansion of the Green function, namely (3.70):

$$\frac{1}{|\mathbf{x} - \mathbf{x}'|} = 4\pi \sum_{l=0}^{\infty} \sum_{m=-l}^{l} \frac{1}{2l+1} \frac{r_<^l}{r_>^{l+1}}\, Y_{lm}^*(\theta', \phi') Y_{lm}(\theta, \phi)$$

Suppose that we wish to obtain a similar expansion for the Green function appropriate for the "exterior" problem with a spherical boundary at $r = a$. The result is readily found from the image form of the Green function (2.16). Using expansion (3.70) for both terms in (2.16), we obtain:

$$G(\mathbf{x}, \mathbf{x}') = 4\pi \sum_{l,m} \frac{1}{2l+1} \left[ \frac{r_<^l}{r_>^{l+1}} - \frac{1}{a} \left( \frac{a^2}{rr'} \right)^{l+1} \right] Y_{lm}^*(\theta', \phi') Y_{lm}(\theta, \phi) \tag{3.114}$$

To see clearly the structure of (3.114) and to verify that it satisfies the boundary conditions, we exhibit the radial factors separately for $r < r'$ and for $r > r'$:

$$\left[\frac{r_>^l}{r_>^{l+1}} - \frac{1}{a}\left(\frac{a^2}{rr'}\right)^{l+1}\right] = \begin{cases} \dfrac{1}{r'^{l+1}}\left[r^l - \dfrac{a^{2l+1}}{r^{l+1}}\right], & r < r' \\ \left[r'^l - \dfrac{a^{2l+1}}{r'^{l+1}}\right]\dfrac{1}{r^{l+1}}, & r > r' \end{cases} \tag{3.115}$$

First of all, we note that for either $r$ or $r'$ equal to $a$ the radial factor vanishes, as required. Similarly, as $r$ or $r' \to \infty$, the radial factor vanishes. It is symmetric in $r$ and $r'$. Viewed as a function of $r$, for fixed $r'$, the radial factor is just a linear combination of the solutions $r^l$ and $r^{-(l+1)}$ of the radial part (3.7) of the Laplace equation. It is admittedly a different linear combination for $r < r'$ and for $r > r'$. The reason for this, which will become apparent below, is connected with the fact that the Green function is a solution of the Poisson equation with a delta function inhomogeneity.

Now that we have seen the general structure of the expansion of a Green function in separable coordinates we turn to the systematic construction of such expansions from first principles. A Green function for a Dirichlet potential problem satisfies the equation

$$\nabla_x^2 G(\mathbf{x}, \mathbf{x}') = -4\pi\delta(\mathbf{x} - \mathbf{x}') \tag{3.116}$$

subject to the boundary conditions $G(\mathbf{x}, \mathbf{x}') = 0$ for either $\mathbf{x}$ or $\mathbf{x}'$ on the boundary surface $S$. For spherical boundary surfaces we desire an expansion of the general form (3.114). Accordingly we exploit the fact that the delta function can be written*

$$\delta(\mathbf{x} - \mathbf{x}') = \frac{1}{r^2}\,\delta(r - r')\,\delta(\phi - \phi')\,\delta(\cos\theta - \cos\theta')$$

and that the completeness relation (3.56) can be used to represent the angular delta functions:

$$\delta(\mathbf{x} - \mathbf{x}') = \frac{1}{r^2}\,\delta(r - r')\sum_{l=0}^{\infty}\sum_{m=-l}^{l} Y_{lm}^*(\theta', \phi')Y_{lm}(\theta, \phi) \tag{3.117}$$

Then the Green function, considered as a function of $\mathbf{x}$, can be expanded as

$$G(\mathbf{x}, \mathbf{x}') = \sum_{l=0}^{\infty}\sum_{m=-l}^{l} A_{lm}(r|r', \theta', \phi')Y_{lm}(\theta, \phi) \tag{3.118}$$

Substitution of (3.117) and (3.118) into (3.116) leads to the results

$$A_{lm}(r|r', \theta', \phi') = g_l(r, r')Y_{lm}^*(\theta', \phi') \tag{3.119}$$

*To express $\delta(\mathbf{x} - \mathbf{x}') = \delta(x_1 - x_1')\delta(x_2 - x_2')\delta(x_3 - x_3')$ in terms of the coordinates $(\xi_1, \xi_2, \xi_3)$, related to $(x_1, x_2, x_3)$ via the Jacobian $J(x_i, \xi_i)$, we note that the meaningful quantity is $\delta(\mathbf{x} - \mathbf{x}')\,d^3x$. Hence

$$\delta(\mathbf{x} - \mathbf{x}') = \frac{1}{|J(x_i, \xi_i)|}\,\delta(\xi_1 - \xi_1')\,\delta(\xi_2 - \xi_2')\,\delta(\xi_3 - \xi_3')$$

See Problem 1.2.

with

$$\frac{1}{r}\frac{d^2}{dr^2}(rg_l(r, r')) - \frac{l(l+1)}{r^2}g_l(r, r') = -\frac{4\pi}{r^2}\delta(r - r') \tag{3.120}$$

The radial Green function is seen to satisfy the homogeneous radial equation (3.7) for $r \neq r'$. Thus it can be written as

$$g_l(r, r') = \begin{cases} Ar^l + Br^{-(l+1)} & \text{for } r < r' \\ A'r^l + B'r^{-(l+1)} & \text{for } r > r' \end{cases}$$

The coefficients $A, B, A', B'$ are functions of $r'$ to be determined by the boundary conditions, the requirement implied by $\delta(r - r')$ in (3.120), and the symmetry of $g_l(r, r')$ in $r$ and $r'$. Suppose that the boundary surfaces are concentric spheres at $r = a$ and $r = b$. The vanishing of $G(\mathbf{x}, \mathbf{x}')$ for $\mathbf{x}$ on the surface implies the vanishing of $g_l(r, r')$ for $r = a$ and $r = b$. Consequently $g_l(r, r')$ becomes

$$g_l(r, r') = \begin{cases} A\left(r^l - \dfrac{a^{2l+1}}{r^{l+1}}\right), & r < r' \\ B'\left(\dfrac{1}{r^{l+1}} - \dfrac{r^l}{b^{2l+1}}\right), & r > r' \end{cases} \tag{3.121}$$

The symmetry in $r$ and $r'$ requires that the coefficients $A(r')$ and $B'(r')$ be such that $g_l(r, r')$ can be written

$$g_l(r, r') = C\left(r_<^l - \frac{a^{2l+1}}{r_<^{l+1}}\right)\left(\frac{1}{r_>^{l+1}} - \frac{r_>^l}{b^{2l+1}}\right) \tag{3.122}$$

where $r_<$ ($r_>$) is the smaller (larger) of $r$ and $r'$. To determine the constant $C$ we must consider the effect of the delta function in (3.120). If we multiply both sides of (3.120) by $r$ and integrate over the interval from $r = r' - \epsilon$ to $r = r' + \epsilon$, where $\epsilon$ is very small, we obtain

$$\left\{\frac{d}{dr}[rg_l(r, r')]\right\}_{r'+\epsilon} - \left\{\frac{d}{dr}[rg_l(r, r')]\right\}_{r'-\epsilon} = -\frac{4\pi}{r'} \tag{3.123}$$

Thus there is a discontinuity in slope at $r = r'$, as indicated in Fig. 3.10.

For $r = r' + \epsilon$, $r_> = r$, $r_< = r'$. Hence

$$\begin{aligned}\left\{\frac{d}{dr}[rg_l(r, r')]\right\}_{r'+\epsilon} &= C\left(r'^l - \frac{a^{2l+1}}{r'^{l+1}}\right)\left[\frac{d}{dr}\left(\frac{1}{r^l} - \frac{r^{l+1}}{b^{2l+1}}\right)\right]_{r=r'} \\ &= -\frac{C}{r'}\left[1 - \left(\frac{a}{r'}\right)^{2l+1}\right]\left[l + (l+1)\left(\frac{r'}{b}\right)^{2l+1}\right]\end{aligned}$$

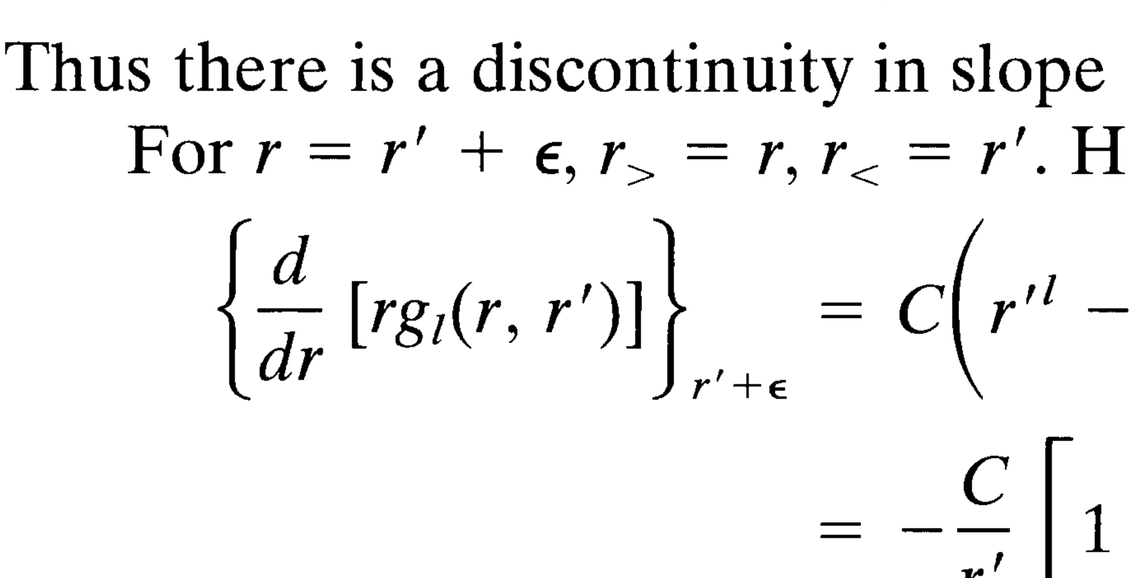


**Figure 3.10** Discontinuity in slope of the radial Green function.

Similarly

$$\left\{\frac{d}{dr}\,[rg_l(r, r')]\right\}_{r'-\epsilon} = \frac{C}{r'}\left[l + 1 + l\left(\frac{a}{r'}\right)^{2l+1}\right]\left[1 - \left(\frac{r'}{b}\right)^{2l+1}\right]$$

Substituting these derivatives into (3.123), we find:

$$C = \frac{4\pi}{(2l + 1)\left[1 - \left(\frac{a}{b}\right)^{2l+1}\right]} \tag{3.124}$$

Combination of (3.124), (3.122), (3.119), and (3.118) yields the expansion of the Green function for a spherical shell bounded by $r = a$ and $r = b$:

$$G(\mathbf{x}, \mathbf{x}') = 4\pi \sum_{l=0}^{\infty} \sum_{m=-l}^{l} \frac{Y^*_{lm}(\theta', \phi')Y_{lm}(\theta, \phi)}{(2l + 1)\left[1 - \left(\frac{a}{b}\right)^{2l+1}\right]} \left(r_<^l - \frac{a^{2l+1}}{r_<^{l+1}}\right)\left(\frac{1}{r_>^{l+1}} - \frac{r_>^l}{b^{2l+1}}\right) \tag{3.125}$$

For the special cases $a \to 0$, $b \to \infty$, and $b \to \infty$, we recover the expansions (3.70) and (3.114), respectively. For the "interior" problem with a sphere of radius $b$, we merely let $a \to 0$. Whereas the expansion for a single sphere is most easily obtained from the image solution, the general result (3.125) for a spherical shell is rather difficult to obtain by the method of images, since it involves an infinite set of images.

## *3.10 Solution of Potential Problems with the Spherical Green Function Expansion*

The general solution to the Poisson equation with specified values of the potential on the boundary surface is (see Section 1.10):

$$\Phi(\mathbf{x}) = \frac{1}{4\pi\epsilon_0}\int_V \rho(\mathbf{x}')G(\mathbf{x}, \mathbf{x}')\, d^3x' - \frac{1}{4\pi}\oint_S \Phi(\mathbf{x}')\,\frac{\partial G}{\partial n'}\, da' \tag{3.126}$$

For purposes of illustration let us consider the potential *inside* a sphere of radius $b$. First we will establish the equivalence of the surface integral in (3.126) to the method of Section 3.5, equations (3.61) and (3.58). With $a = 0$ in (3.125), the normal derivative, evaluated at $r' = b$, is:

$$\frac{\partial G}{\partial n'} = \left.\frac{\partial G}{\partial r'}\right|_{r'=b} = -\frac{4\pi}{b^2}\sum_{l,m}\left(\frac{r}{b}\right)^l Y^*_{lm}(\theta', \phi')Y_{lm}(\theta, \phi) \tag{3.127}$$

Consequently the solution of the Laplace equation inside $r = b$ with $\Phi = V(\theta', \phi')$ on the surface is, according to (3.126):

$$\Phi(\mathbf{x}) = \sum_{l,m}\left[\int V(\theta', \phi')Y^*_{lm}(\theta', \phi')\, d\Omega'\right]\left(\frac{r}{b}\right)^l Y_{lm}(\theta, \phi) \tag{3.128}$$

For the case considered, this is the same form of solution as (3.61) with (3.58). There is a *third* form of solution for the sphere, the so-called Poisson integral (2.19). The equivalence of this solution to the Green function expansion solution

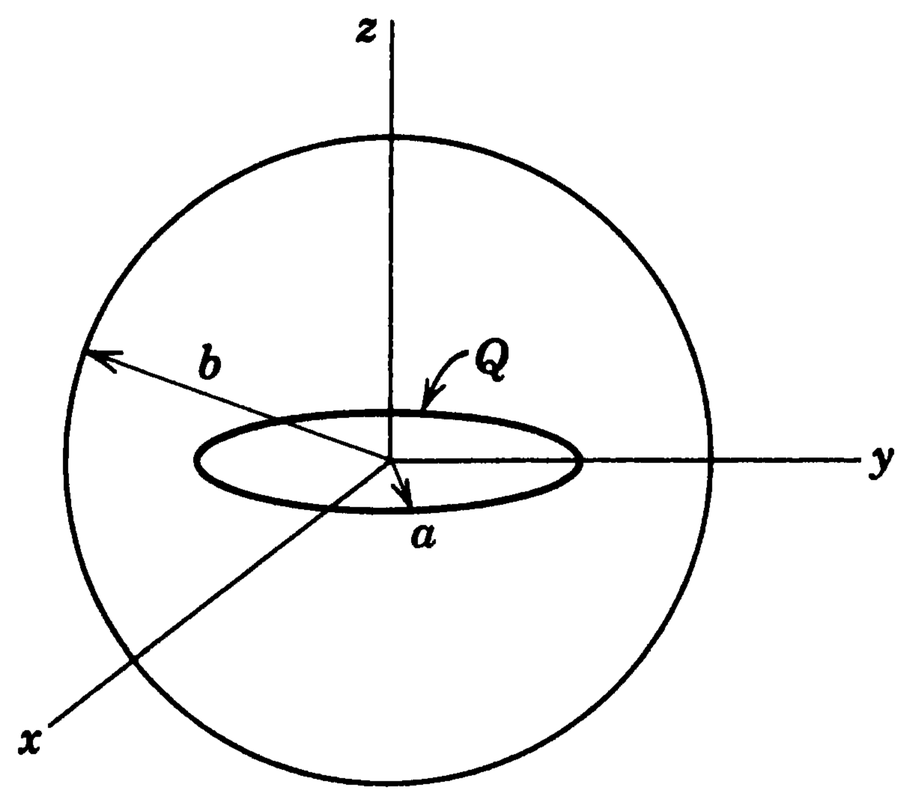


**Figure 3.11** Ring of charge of radius $a$ and total charge $Q$ inside a grounded, conducting sphere of radius $b$.

is implied by the fact that both were derived from the general expression (3.126) and the image Green function. The explicit demonstration of the equivalence of (2.19) and the series solution (3.61) will be left to the problems.

We now turn to the solution of problems with charge distributed in the volume, so that the volume integral in (3.126) is involved. It is sufficient to consider problems in which the potential vanishes on the boundary surfaces. By linear superposition of a solution of the Laplace equation, the general situation can be obtained. The first illustration is that of a hollow grounded sphere of radius $b$ with a concentric ring of charge of radius $a$ and total charge $Q$. The ring of charge is located in the $x$-$y$ plane, as shown in Fig. 3.11. The charge density of the ring can be written with the help of delta functions in angle and radius as

$$\rho(\mathbf{x}') = \frac{Q}{2\pi a^2}\,\delta(r' - a)\,\delta(\cos\theta') \tag{3.129}$$

In the volume integral over the Green function only terms in (3.125) with $m = 0$ will survive because of azimuthal symmetry. Then, using (3.57) and remembering that $a \to 0$ in (3.125), we find

$$\begin{aligned}\Phi(\mathbf{x}) &= \frac{1}{4\pi\epsilon_0}\int \rho(\mathbf{x}')G(\mathbf{x}, \mathbf{x}')\,d^3x' \\ &= \frac{Q}{4\pi\epsilon_0}\sum_{l=0}^{\infty} P_l(0)r_<^l\left(\frac{1}{r_>^{l+1}} - \frac{r_>^l}{b^{2l+1}}\right)P_l(\cos\theta)\end{aligned} \tag{3.130}$$

where now $r_<$ ($r_>$) is the smaller (larger) of $r$ and $a$. Using the fact that $P_{2n+1}(0) = 0$ and $P_{2n}(0) = [(-1)^n(2n-1)!!]/2^n n!$, (3.130) can be written as

$$\Phi(\mathbf{x}) = \frac{Q}{4\pi\epsilon_0}\sum_{n=0}^{\infty}\frac{(-1)^n(2n-1)!!}{2^n n!}\,r_<^{2n}\left(\frac{1}{r_>^{2n+1}} - \frac{r_>^{2n}}{b^{4n+1}}\right)P_{2n}(\cos\theta) \tag{3.131}$$

In the limit $b \to \infty$, it will be seen that (3.130) or (3.131) reduces to the expression at the end of Section 3.3 for a ring of charge in free space. The present result can be obtained alternatively by using that result and the images for a sphere.

A second example of charge densities, illustrated in Fig. 3.12, is that of a hollow grounded sphere with a uniform line charge of total charge $Q$ located on the $z$ axis between the north and south poles of the sphere. Again with the help of delta functions, the volume-charge density can be written:

$$\rho(\mathbf{x}') = \frac{Q}{2b}\frac{1}{2\pi r'^2}\,[\delta(\cos\theta' - 1) + \delta(\cos\theta' + 1)] \tag{3.132}$$

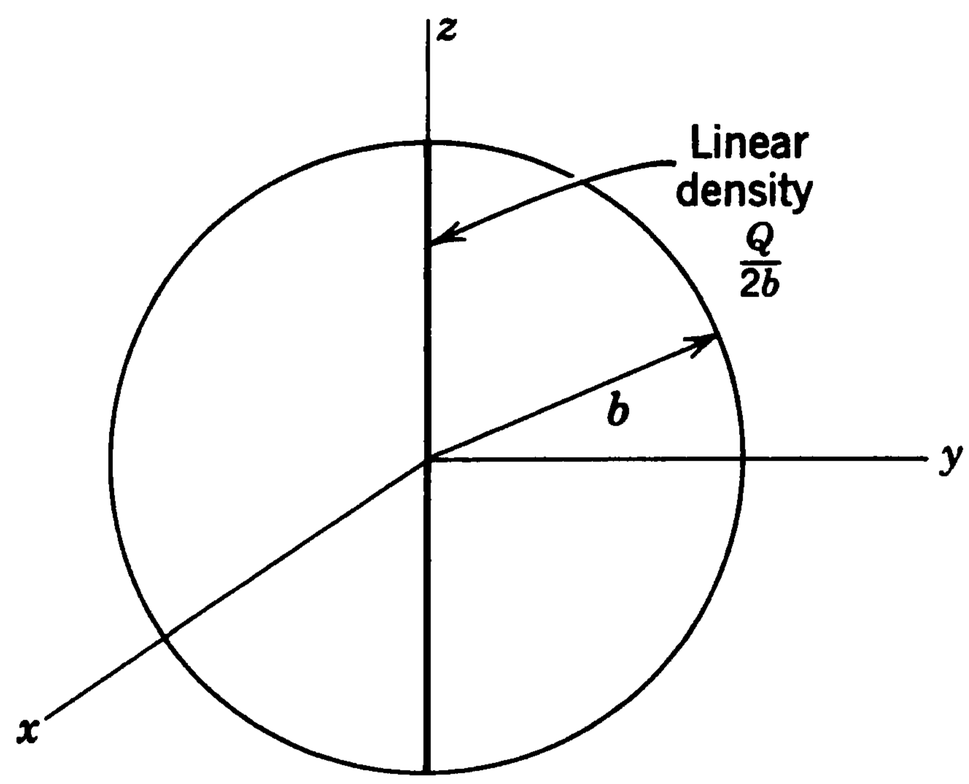


**Figure 3.12** Uniform line charge of length $2b$ and total charge $Q$ inside a grounded, conducting sphere of radius $b$.

The two delta functions in $\cos\theta$ correspond to the two halves of the line charge, above and below the $x$-$y$ plane. The factor $2\pi r'^2$ in the denominator assures that the charge density has a constant *linear* density $Q/2b$. With this density in (3.126) we obtain

$$\Phi(\mathbf{x}) = \frac{Q}{8\pi\epsilon_0 b}\sum_{l=0}^{\infty}[P_l(1) + P_l(-1)]P_l(\cos\theta)\int_0^b r_<^l\left(\frac{1}{r_>^{l+1}} - \frac{r_>^l}{b^{2l+1}}\right)dr' \tag{3.133}$$

The integral must be broken up into the intervals $0 \le r' < r$ and $r \le r' \le b$. Then we find

$$\begin{aligned}\int_0^b &= \left(\frac{1}{r^{l+1}} - \frac{r^l}{b^{2l+1}}\right)\int_0^r r'^l\,dr' + r^l\int_r^b\left(\frac{1}{r'^{l+1}} - \frac{r'^l}{b^{2l+1}}\right)dr' \\ &= \frac{(2l+1)}{l(l+1)}\left[1 - \left(\frac{r}{b}\right)^l\right]\end{aligned} \tag{3.134}$$

For $l = 0$ this result is indeterminate. Applying L'Hospital's rule, we have, for $l = 0$ only,

$$\int_0^b = \lim_{l\to 0}\frac{\dfrac{d}{dl}\left[1 - \left(\dfrac{r}{b}\right)^l\right]}{\dfrac{d}{dl}(l)} = \lim_{l\to 0}\left[-\frac{d}{dl}e^{l\ln(r/b)}\right] = \ln\left(\frac{b}{r}\right) \tag{3.135}$$

This can be verified by direct integration in (3.133) for $l = 0$. Using the fact that $P_l(-1) = (-1)^l$, the potential (3.133) can be put in the form:

$$\Phi(\mathbf{x}) = \frac{Q}{4\pi\epsilon_0 b}\left\{\ln\left(\frac{b}{r}\right) + \sum_{j=1}^{\infty}\frac{(4j+1)}{2j(2j+1)}\left[1 - \left(\frac{r}{b}\right)^{2j}\right]P_{2j}(\cos\theta)\right\} \tag{3.136}$$

The presence of the logarithm for $l = 0$ reminds us that the potential diverges along the $z$ axis. This is borne out by the series in (3.136), which diverges for $\cos\theta = \pm 1$, except at $r = b$ exactly. The peculiarity that the logarithm has argument $(b/r)$ instead of $(b/r\sin\theta)$ is addressed in Problem 3.8.

The surface-charge density on the grounded sphere is readily obtained from (3.136) by differentiation:

$$\sigma(\theta) = \epsilon_0\left.\frac{\partial\Phi}{\partial r}\right|_{r=b} = -\frac{Q}{4\pi b^2}\left[1 + \sum_{j=1}^{\infty}\frac{(4j+1)}{(2j+1)}P_{2j}(\cos\theta)\right] \tag{3.137}$$

The leading term shows that the total charge induced on the sphere is $-Q$, the other terms integrating to zero over the surface of the sphere.

## 3.11 Expansion of Green Functions in Cylindrical Coordinates

The expansion of the potential of a unit point charge in cylindrical coordinates affords another useful example of Green function expansions. We present the initial steps in general enough fashion to permit the procedure to be readily adapted to finding Green functions for potential problems with cylindrical boundary surfaces. The starting point is the equation for the Green function:

$$\nabla_x^2 G(\mathbf{x}, \mathbf{x}') = -\frac{4\pi}{\rho}\,\delta(\rho - \rho')\,\delta(\phi - \phi')\,\delta(z - z') \tag{3.138}$$

where the delta function has been expressed in cylindrical coordinates. The $\phi$ and $z$ delta functions can be written in terms of orthonormal functions:

$$\left.\begin{aligned} \delta(z - z') &= \frac{1}{2\pi}\int_{-\infty}^{\infty} dk\, e^{ik(z-z')} = \frac{1}{\pi}\int_0^{\infty} dk\, \cos[k(z - z')] \\ \delta(\phi - \phi') &= \frac{1}{2\pi}\sum_{m=-\infty}^{\infty} e^{im(\phi-\phi')} \end{aligned}\right\} \tag{3.139}$$

We expand the Green function in similar fashion:

$$G(\mathbf{x}, \mathbf{x}') = \frac{1}{2\pi^2}\sum_{m=-\infty}^{\infty}\int_0^{\infty} dk\, e^{im(\phi-\phi')}\cos[k(z - z')]g_m(k, \rho, \rho') \tag{3.140}$$

Then substitution into (3.138) leads to an equation for the radial Green function $g_m(k, \rho, \rho')$:

$$\frac{1}{\rho}\frac{d}{d\rho}\left(\rho\frac{dg_m}{d\rho}\right) - \left(k^2 + \frac{m^2}{\rho^2}\right)g_m = -\frac{4\pi}{\rho}\,\delta(\rho - \rho') \tag{3.141}$$

For $\rho \neq \rho'$ this is just equation (3.98) for the modified Bessel functions, $I_m(k\rho)$ and $K_m(k\rho)$. Suppose that $\psi_1(k\rho)$ is some linear combination of $I_m$ and $K_m$ which satisfies the correct boundary conditions for $\rho < \rho'$, and that $\psi_2(k\rho)$ is a linearly independent combination that satisfies the proper boundary conditions for $\rho > \rho'$. Then the symmetry of the Green function in $\rho$ and $\rho'$ requires that

$$g_m(k, \rho, \rho') = \psi_1(k\rho_<)\psi_2(k\rho_>) \tag{3.142}$$

The normalization of the product $\psi_1\psi_2$ is determined by the discontinuity in slope implied by the delta function in (3.141):

$$\left.\frac{dg_m}{d\rho}\right|_+ - \left.\frac{dg_m}{d\rho}\right|_- = -\frac{4\pi}{\rho'} \tag{3.143}$$

where $|_\pm$ means evaluated at $\rho = \rho' \pm \epsilon$. From (3.142) it is evident that

$$\left[\left.\frac{dg_m}{d\rho}\right|_+ - \left.\frac{dg_m}{d\rho}\right|_-\right] = k(\psi_1\psi_2' - \psi_2\psi_1') = kW[\psi_1, \psi_2] \tag{3.144}$$

where primes mean differentiation with respect to the argument, and $W[\psi_1, \psi_2]$ is the Wronskian of $\psi_1$ and $\psi_2$. Equation (3.141) is of the Sturm–Liouville type

$$\frac{d}{dx}\left[p(x)\frac{dy}{dx}\right] + g(x)y = 0 \tag{3.145}$$

and it is well known that the Wronskian of two linearly independent solutions of such an equation is proportional to $[1/p(x)]$. Hence the possibility of satisfying (3.143) for all values of $\rho'$ is assured. Clearly we must demand that the normalization of the product $\psi_1\psi_2$ be such that the Wronskian has the value

$$W[\psi_1(x), \psi_2(x)] = -\frac{4\pi}{x} \tag{3.146}$$

If there are no boundary surfaces, $g_m(k, \rho, \rho')$ must be finite at $\rho = 0$ and vanish at $\rho \to \infty$. Consequently $\psi_1(k\rho) = AI_m(k\rho)$ and $\psi_2(k\rho) = K_m(k\rho)$. The constant $A$ is to be determined from the Wronskian condition (3.146). Since the Wronskian is proportional to $(1/x)$ for all values of $x$, it does not matter where we evaluate it. Using the limiting forms (3.102) and (3.103) for small $x$ [or (3.104) for large $x$], we find

$$W[I_m(x), K_m(x)] = -\frac{1}{x} \tag{3.147}$$

so that $A = 4\pi$. The expansion of $1/|\mathbf{x} - \mathbf{x}'|$ therefore becomes:

$$\frac{1}{|\mathbf{x} - \mathbf{x}'|} = \frac{2}{\pi}\sum_{m=-\infty}^{\infty}\int_0^\infty dk\, e^{im(\phi-\phi')}\cos[k(z - z')]I_m(k\rho_<)K_m(k\rho_>) \tag{3.148}$$

This can also be written entirely in terms of real functions as:

$$\begin{aligned}\frac{1}{|\mathbf{x} - \mathbf{x}'|} &= \frac{4}{\pi}\int_0^\infty dk\, \cos[k(z - z')] \\ &\times \left\{\tfrac{1}{2}I_0(k\rho_<)K_0(k\rho_>) + \sum_{m=1}^{\infty}\cos[m(\phi - \phi')]I_m(k\rho_<)K_m k\rho_>)\right\}\end{aligned} \tag{3.149}$$

A number of useful mathematical results can be obtained from this expansion. If we let $\mathbf{x}' \to 0$, only the $m = 0$ term survives, and we obtain the integral representation:

$$\frac{1}{\sqrt{\rho^2 + z^2}} = \frac{2}{\pi}\int_0^\infty \cos kz\; K_0(k\rho)\, dk \tag{3.150}$$

If we replace $\rho^2$ in (3.150) by $R^2 = \rho^2 + \rho'^2 - 2\rho\rho'\cos(\phi - \phi')$, then we have on the left-hand side the inverse distance $|\mathbf{x} - \mathbf{x}'|^{-1}$ with $z' = 0$, i.e., just (3.149) with $z' = 0$. Then comparison of the right-hand sides of (3.149) and (3.150) (which must hold for *all* values of $z$) leads to the identification:

$$\begin{aligned}&K_0(k\sqrt{\rho^2 + \rho'^2 - 2\rho\rho'\cos(\phi - \phi')}) = \\ &\qquad I_0(k\rho_<)K_0(k\rho_>) + 2\sum_{m=1}^{\infty}\cos[m(\phi - \phi')]I_m(k\rho_<)K_m(k\rho_>)\end{aligned} \tag{3.151}$$

In this last result we can take the limit $k \to 0$ and obtain an expansion for the Green function for (two-dimensional) polar coordinates:

$$\ln\left(\frac{1}{\rho^2 + \rho'^2 - 2\rho\rho' \cos(\phi - \phi')}\right) = 2\ln\left(\frac{1}{\rho_>}\right) + 2\sum_{m=1}^{\infty} \frac{1}{m}\left(\frac{\rho_<}{\rho_>}\right)^m \cos[m(\phi - \phi')] \tag{3.152}$$

This representation can be verified by a systematic construction of the two-dimensional Green function for the Poisson equation along the lines leading to (3.148). See Problem 2.17.

## 3.12 *Eigenfunction Expansions for Green Functions*

Another technique for obtaining expansions of Green functions is the use of eigenfunctions for some related problem. This approach is intimately connected with the methods of Sections 3.9 and 3.11.

To specify what we mean by eigenfunctions, we consider an elliptic differential equation of the form

$$\nabla^2\psi(\mathbf{x}) + [f(\mathbf{x}) + \lambda]\psi(\mathbf{x}) = 0 \tag{3.153}$$

If the solutions $\psi(\mathbf{x})$ are required to satisfy homogeneous boundary conditions on the surface $S$ of the volume of interest $V$, then (3.153) will not in general have well-behaved (e.g., finite and continuous) solutions, except for certain values of $\lambda$. These values of $\lambda$, denoted by $\lambda_n$, are called *eigenvalues* (or *characteristic values*) and the solutions $\psi_n(\mathbf{x})$ are called *eigenfunctions*.* The eigenvalue differential equation is written:

$$\nabla^2\psi_n(\mathbf{x}) + [f(\mathbf{x}) + \lambda_n]\psi_n(\mathbf{x}) = 0 \tag{3.154}$$

By methods similar to those used to prove the orthogonality of the Legendre or Bessel functions, it can be shown that the eigenfunctions are orthogonal:

$$\int_V \psi_m^*(\mathbf{x})\psi_n(\mathbf{x})\, d^3x = \delta_{mn} \tag{3.155}$$

where the eigenfunctions are assumed normalized. The spectrum of eigenvalues $\lambda_n$ may be a discrete set, or a continuum, or both. It will be assumed that the totality of eigenfunctions forms a complete set.

Suppose now that we wish to find the Green function for the equation:

$$\nabla_x^2 G(\mathbf{x}, \mathbf{x}') + [f(\mathbf{x}) + \lambda]G(\mathbf{x}, \mathbf{x}') = -4\pi\delta(\mathbf{x} - \mathbf{x}') \tag{3.156}$$

where $\lambda$ is *not* equal to one of the eigenvalues $\lambda_n$ of (3.154). Furthermore, suppose that the Green function is to have the same boundary conditions as the eigenfunctions of (3.154). Then the Green function can be expanded in a series of the eigenfunctions of the form:

$$G(\mathbf{x}, \mathbf{x}') = \sum_n a_n(\mathbf{x}')\psi_n(\mathbf{x}) \tag{3.157}$$

*The reader familiar with wave mechanics will recognize (3.153) as equivalent to the Schrödinger equation for a particle in a potential.

Substitution into the differential equation for the Green function leads to the result:

$$\sum_m a_m(\mathbf{x}')(\lambda - \lambda_m)\psi_m(\mathbf{x}) = -4\pi\delta(\mathbf{x} - \mathbf{x}') \tag{3.158}$$

If we multiply both sides by $\psi_n^*(\mathbf{x})$ and integrate over the volume $V$, the orthogonality condition (3.155) reduces the left-hand side to one term, and we find:

$$a_n(\mathbf{x}') = 4\pi \frac{\psi_n^*(\mathbf{x}')}{\lambda_n - \lambda} \tag{3.159}$$

Consequently the eigenfunction expansion of the Green function is:

$$G(\mathbf{x}, \mathbf{x}') = 4\pi \sum_n \frac{\psi_n^*(\mathbf{x}')\psi_n(\mathbf{x})}{\lambda_n - \lambda} \tag{3.160}$$

For a continuous spectrum the sum is replaced by an integral.

Specializing the foregoing considerations to the Poisson equation, we place $f(\mathbf{x}) = 0$ and $\lambda = 0$ in (3.156). As a first, essentially trivial, illustration we let (3.154) be the wave equation over all space:

$$(\nabla^2 + k^2)\psi_{\mathbf{k}}(\mathbf{x}) = 0 \tag{3.161}$$

with the continuum of eigenvalues, $k^2$, and the eigenfunctions:

$$\psi_{\mathbf{k}}(\mathbf{x}) = \frac{1}{(2\pi)^{3/2}} e^{i\mathbf{k}\cdot\mathbf{x}} \tag{3.162}$$

These eigenfunctions have delta function normalization:

$$\int \psi_{\mathbf{k}'}^*(\mathbf{x})\psi_{\mathbf{k}}(\mathbf{x})\, d^3x = \delta(\mathbf{k} - \mathbf{k}') \tag{3.163}$$

Then, according to (3.160), the infinite space Green function has the expansion:

$$\frac{1}{|\mathbf{x} - \mathbf{x}'|} = \frac{1}{2\pi^2} \int d^3k \frac{e^{i\mathbf{k}\cdot(\mathbf{x}-\mathbf{x}')}}{k^2} \tag{3.164}$$

This is just the three-dimensional Fourier integral representation of $1/|\mathbf{x} - \mathbf{x}'|$.

As a second example, consider the Green function for a Dirichlet problem inside a rectangular box defined by the six planes, $x = 0$, $y = 0$, $z = 0$, $x = a$, $y = b$, $z = c$. The expansion is to be made in terms of eigenfunctions of the wave equation:

$$(\nabla^2 + k_{lmn}^2)\psi_{lmn}(x, y, z) = 0 \tag{3.165}$$

where the eigenfunctions which vanish on all the boundary surfaces are

$$\psi_{lmn}(x, y, z) = \sqrt{\frac{8}{abc}} \sin\left(\frac{l\pi x}{a}\right) \sin\left(\frac{m\pi y}{b}\right) \sin\left(\frac{n\pi z}{c}\right)$$

and (3.166)

$$k_{lmn}^2 = \pi^2\left(\frac{l^2}{a^2} + \frac{m^2}{b^2} + \frac{n^2}{c^2}\right)$$

The expansion of the Green function is therefore:

$$G(\mathbf{x}, \mathbf{x}') = \frac{32}{\pi abc} \times \sum_{l,m,n=1}^{\infty} \frac{\sin\left(\frac{l\pi x}{a}\right) \sin\left(\frac{l\pi x'}{a}\right) \sin\left(\frac{m\pi y}{b}\right) \sin\left(\frac{m\pi y'}{b}\right) \sin\left(\frac{n\pi z}{c}\right) \sin\left(\frac{n\pi z'}{c}\right)}{\frac{l^2}{a^2} + \frac{m^2}{b^2} + \frac{n^2}{c^2}} \tag{3.167}$$

To relate expansion (3.167) to the type of expansions obtained in Sections 3.9 and 3.11, namely, (3.125) for spherical coordinates and (3.148) for cylindrical coordinates, we write down the analogous expansion for the rectangular box. If the $x$ and $y$ coordinates are treated in the manner of $(\theta, \phi)$ or $(\phi, z)$ in those cases, while the $z$ coordinate is singled out for special treatment, we obtain the Green function:

$$G(\mathbf{x}, \mathbf{x}') = \frac{16\pi}{ab} \sum_{l,m=1}^{\infty} \sin\left(\frac{l\pi x}{a}\right) \sin\left(\frac{l\pi x'}{a}\right) \sin\left(\frac{m\pi y}{b}\right) \sin\left(\frac{m\pi y'}{b}\right) \times \frac{\sinh(K_{lm}z_<) \sinh[K_{lm}(c - z_>)]}{K_{lm} \sinh(K_{lm}c)} \tag{3.168}$$

where $K_{lm} = \pi(l^2/a^2 + m^2/b^2)^{1/2}$. If (3.167) and (3.168) are to be equal, it must be that the sum over $n$ in (3.167) is just the Fourier series representation on the interval $(0, c)$ of the one-dimensional Green function in $z$ in (3.168):

$$\frac{\sinh(K_{lm}z_<) \sinh[K_{lm}(c - z_>)]}{K_{lm} \sinh(K_{lm}c)} = \frac{2}{c} \sum_{n=1}^{\infty} \frac{\sin\left(\frac{n\pi z'}{c}\right)}{K_{lm}^2 + \left(\frac{n\pi}{c}\right)^2} \sin\left(\frac{n\pi z}{c}\right) \tag{3.169}$$

The verification that (3.169) is the correct Fourier representation is left as an exercise for the reader.

Further illustrations of this technique will be found in the problems at the end of the chapter.

## 3.13 *Mixed Boundary Conditions; Conducting Plane with a Circular Hole*

The potential problems discussed so far in this chapter have been of the orthodox kind in which the boundary conditions are of one type (usually Dirichlet) over the whole boundary surface. In the uniqueness proof for solutions of the Laplace or Poisson equation (Section 1.9) it was pointed out, however, that mixed boundary conditions, where the potential is specified over part of the boundary and its normal derivative is specified over the remainder, also lead to well-defined, unique boundary-value problems. Textbooks tend to mention the possibility of mixed boundary conditions when making the uniqueness proof and to ignore such problems in subsequent discussion. The reason, as we shall see, is that mixed boundary conditions are much more difficult to handle than the normal type.

To illustrate the difficulties encountered with mixed boundary conditions, we consider the problem of an infinitely thin, grounded, conducting plane with a circular hole of radius $a$ cut in it, and with the electric field far from the hole being normal to the plane, constant in magnitude, and having different values on either side of the plane. The geometry is sketched in Fig. 3.13. The plane is at $z = 0$; the hole is centered on the origin of coordinates; the nonvanishing asymptotic electric field components are $E_z = -E_0$ for $z > 0$ and $E_z = -E_1$ for $z < 0$. The problem may seem contrived, but with $E_0 = 0$ or $E_1 = 0$ it has application for radiation from small holes in the walls of wave guides, where "small" is defined as small compared to a wavelength so that electrostatic considerations can apply (see Section 9.5).

Since the electric field is specified far from the hole, we write the potential as

$$\Phi = \begin{Bmatrix} E_0 z + \Phi^{(1)} & (z > 0) \\ E_1 z + \Phi^{(1)} & (z < 0) \end{Bmatrix} \tag{3.170}$$

If the hole were not there, $\Phi^{(1)}$ would be zero. The top surface of the sheet would have a uniform surface charge density $-\epsilon_0 E_0$ and the bottom surface a charge density $\epsilon_0 E_1$. The potential $\Phi^{(1)}$ can thus be thought of as resulting from a rearrangement of surface charge in the neighborhood of the hole. Since this charge density is located on the plane $z = 0$, the potential $\Phi^{(1)}$ can be represented as

$$\Phi^{(1)}(x, y, z) = \frac{1}{4\pi\epsilon_0} \int \frac{\sigma^{(1)}(x', y')\, dx'\, dy'}{\sqrt{(x - x')^2 + (y - y')^2 + z^2}}$$

This shows that $\Phi^{(1)}$ is *even* in $z$, so that $E_x^{(1)}$ and $E_y^{(1)}$ are even in $z$, but $E_z^{(1)}$ is *odd*. We note that $E_x^{(1)}$ and $E_y^{(1)}$ are the $x$ and $y$ components of the total electric field, but that, because of (3.170), $E_z^{(1)}$ is not the total $z$ component. Thus, even though it is odd in $z$, it does not vanish at $z = 0$. Rather, it is discontinuous there.

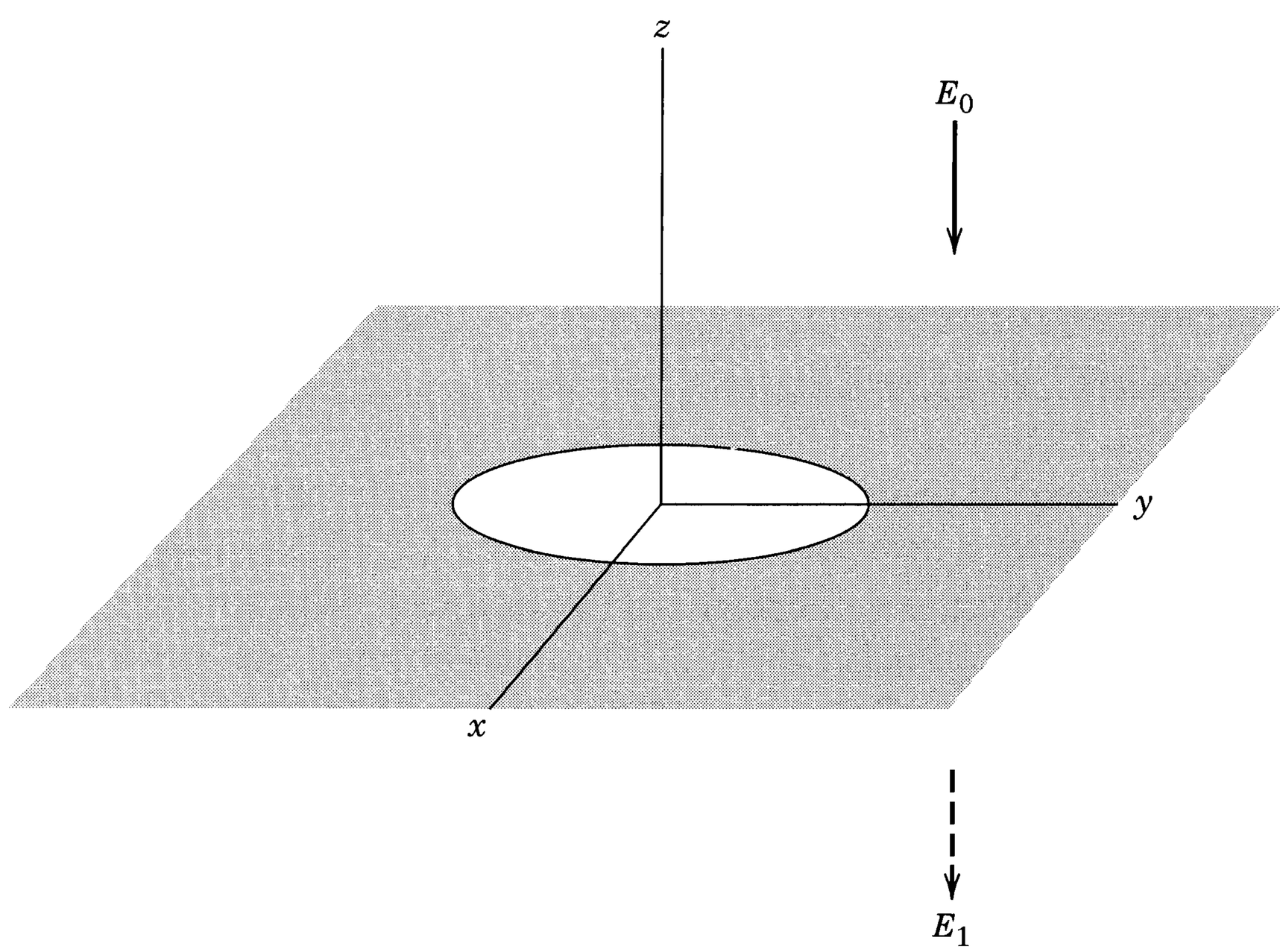


**Figure 3.13**

Since the *total z component* of electric field must be continuous across $z = 0$ in the hole, we must have (for $\rho < a$)

$$-E_0 + E_z^{(1)}|_{z=0^+} = -E_1 + E_z^{(1)}|_{z=0^-}$$

Because $E_z^{(1)}$ is odd in $z$, this relation determines the normal component of the electric field to be

$$E_z^{(1)}|_{z=0^+} = -E_z^{(1)}|_{z=0^-} = \tfrac{1}{2}(E_0 - E_1)$$

provided $(x, y)$ lie inside the opening $(0 \le \rho < a)$. For points on the conducting surface $(a \le \rho < \infty)$, the electric field is not known, but the potential is zero by hypothesis. From (3.170) this means that $\Phi^{(1)} = 0$ there. Note that in the opening we do not know the potential. We therefore have an electrostatic boundary-value problem with the following *mixed boundary conditions*:

$$\left.\frac{\partial \Phi^{(1)}}{\partial z}\right|_{z=0^+} = -\tfrac{1}{2}(E_0 - E_1) \qquad \text{for } 0 \le \rho < a$$

and (3.171)

$$\Phi^{(1)}|_{z=0} = 0 \qquad \text{for } a \le \rho < \infty$$

Because of the azimuthal symmetry of the geometry, the potential $\Phi^{(1)}$ can be written in terms of cylindrical coordinates [from (3.106)] as

$$\Phi^{(1)}(\rho, z) = \int_0^\infty dk\, A(k) e^{-k|z|} J_0(k\rho) \tag{3.172}$$

Before proceeding to see how $A(k)$ is determined by the boundary conditions, we relate $A(k)$ and its derivatives at $k = 0$ to the asymptotic behavior of the potential. For large $\rho$ or $|z|$ the rapid oscillations of $J_0(k\rho)$ or the rapid decrease of $e^{-k|z|}$ imply that the integral in (3.172) receives its important contributions from the region around $k = 0$. The asymptotic behavior of $\Phi^{(1)}$ is therefore related to the behavior of $A(k)$ at small $k$. We assume that $A(k)$ can be expanded in a Taylor series around $k = 0$:

$$A(k) = \sum_{l=0}^{\infty} \frac{k^l}{l!} \frac{d^l A}{dk^l}(0)$$

With this series inserted into (3.172), the potential $\Phi^{(1)}$ becomes

$$\Phi^{(1)}(\rho, z) = \sum_{l=0}^{\infty} \frac{d^l A}{dk^l}(0)\, B_l(\rho, z) \tag{3.173}$$

where

$$B_l(\rho, z) = \frac{1}{l!} \int_0^\infty dk\, k^l e^{-k|z|} J_0(k\rho) \tag{3.174}$$

The integral (3.174) can evidently be written

$$B_l = \frac{1}{l!} \left(-\frac{d}{d\,|z|}\right)^l \int_0^\infty dk\, e^{-k|z|} J_0(k\rho)$$

Using a result from Problem 3.16c, we find that $B_l$ is

$$B_l = \frac{1}{l!} \left(-\frac{d}{d\,|z|}\right)^l \left(\frac{1}{\sqrt{\rho^2 + z^2}}\right) \tag{3.175}$$

The reader should not be surprised to find that explicit calculation yields

$$B_l = \frac{P_l(|\cos\theta|)}{r^{l+1}} \tag{3.176}$$

where $\cos\theta = z/r$ and $r = \sqrt{\rho^2 + z^2}$. The asymptotic expansion (3.173) is thus an expansion of the spherical harmonic form (3.33):

$$\Phi^{(1)} = \sum_{l=0}^{\infty} \frac{d^l A}{dk^l}(0) \cdot \frac{P_l(|\cos\theta|)}{r^{l+1}} \tag{3.177}$$

As is discussed in the next chapter, this expansion in powers of $r^{-1}$ is called a multipole expansion. The $l = 0$ coefficient, $A(0)$, is the *total charge* (divided by $4\pi\epsilon_0$). The $l = 1$ coefficient, $dA(0)/dk$, is the *dipole moment* in the $z$-direction, and so on. Once the function $A(k)$ is known these quantities that describe the asymptotic behavior of the potential can be evaluated without explicit construction of the potential itself.

We are now ready to discuss the mixed boundary value problem. With the assumed form (3.172) for $\Phi^{(1)}$, the boundary conditions (3.171) become a pair of integral equations of the first kind for $A(k)$:

$$\begin{aligned} \int_0^\infty dk\, kA(k)J_0(k\rho) &= \tfrac{1}{2}(E_0 - E_1) \qquad \text{for } 0 \le \rho < a \\ \int_0^\infty dk\, A(k)J_0(k\rho) &= 0 \qquad \text{for } a \le \rho < \infty \end{aligned} \tag{3.178}$$

Such pairs of integral equations, with one of the pair holding over one part of the range of the independent variable and the other over the other part of the range, are known as *dual integral equations*. The general theory of such integral equations is complicated and not highly developed.* Just over a hundred years ago H. Weber solved the closely related problem of the potential of a charged circular disc by means of certain discontinuous integrals involving Bessel functions. We appeal to a generalization of Weber's formulas. Consider the dual integral equations,

$$\begin{aligned} \int_0^\infty dy\, yg(y)J_n(yx) &= x^n \qquad \text{for } 0 \le x < 1 \\ \int_0^\infty dy\, g(y)J_n(yx) &= 0 \qquad \text{for } 1 \le x < \infty \end{aligned} \tag{3.179}$$

Examination of the formula of Sonine and Schafheitlin for the integral of $J_\mu(at)J_\nu(bt)t^{-\lambda}$ (see *Watson*, pp. 398 ff, or *Magnus* et al., p. 99) shows that the solution for $g(y)$ is

$$g(y) = \frac{\Gamma(n+1)}{\sqrt{\pi}\,\Gamma(n+\frac{3}{2})}\, j_{n+1}(y) = \frac{\Gamma(n+1)}{\Gamma(n+\frac{3}{2})}\frac{J_{n+\frac{3}{2}}(y)}{(2y)^{1/2}} \tag{3.180}$$

In this relation $j_n(y)$ is the spherical Bessel function of order $n$ (see Section 9.6).

*One monograph, I. N. Sneddon, *Mixed Boundary Value Problems in Potential Theory*, North-Holland, Amsterdam, and Wiley-Interscience, New York (1966), is devoted to our subject. See also *Tranter* (Chapter VIII).

For our pair of equations (3.178) we have $n = 0$, $x = \rho/a$, $y = ka$. Therefore $A(k)$ is

$$A(k) = \frac{(E_0 - E_1)a^2}{\pi} j_1(ka) = \frac{(E_0 - E_1)}{\pi}\left[\frac{\sin ka}{k^2} - \frac{a \cos ka}{k}\right] \tag{3.181}$$

The expansion of $A(k)$ for small $k$ takes the form,

$$A(k) \simeq \frac{(E_0 - E_1)a^2}{3\pi}\left[ka - \frac{(ka)^3}{10} + \cdots\right]$$

This means that total charge associated with $\Phi^{(1)}$ is zero and the leading term in the asymptotic potential (3.177) is the $l = 1$ contribution,

$$\Phi^{(1)} \to \frac{(E_0 - E_1)a^3}{3\pi} \cdot \frac{|z|}{r^3} \tag{3.182}$$

falling off with distance as $r^{-2}$ and having an *effective electric dipole moment*,

$$\mathbf{p} = \mp\frac{4\epsilon_0}{3}(\mathbf{E}_0 - \mathbf{E}_1)a^3 \qquad (z \gtrless 0) \tag{3.183}$$

The reversal of the effective dipole moment depending on whether the observation point is above or below the plane is a consequence of the fact that a true dipole potential is odd in $z$, whereas (3.182) is even. The idea that a small hole in a plane conducting sheet is equivalent far from the opening to a dipole normal to the surface is important in discussing the consequences of such openings in the walls of waveguides and cavities. Figure 9.4 depicts the origin of the dipole-like field as a consequence of the penetration of the field lines through the hole to terminate on the side with the smaller constant field. The picture is given quantitative meaning through (3.182) and (3.183).

The added potential $\Phi^{(1)}$ in the neighborhood of the opening must be calculated from the exact expression,

$$\Phi^{(1)}(\rho, z) = \frac{(E_0 - E_1)}{\pi} a^2 \int_0^\infty dk\, j_1(ka)e^{-k|z|}J_0(k\rho) \tag{3.184}$$

The integral,* after an integration by parts to replace $j_1$ with $j_0$, can be expressed as a sum of the imaginary parts of the Laplace transforms (for complex $p$) of $J_\nu(k\rho)/k$ for $\nu = 0, 1$. The result, after some simplifications, is

$$\Phi^{(1)}(\rho, z) = \frac{(E_0 - E_1)a}{\pi}\left[\sqrt{\frac{R - \lambda}{2}} - \frac{|z|}{a}\tan^{-1}\left(\sqrt{\frac{2}{R + \lambda}}\right)\right] \tag{3.185}$$

where

$$\lambda = \frac{1}{a^2}(z^2 + \rho^2 - a^2), \qquad R = \sqrt{\lambda^2 + 4z^2/a^2}$$

Some special cases are of interest. The added potential on the axis ($\rho = 0$) is

$$\Phi^{(1)}(0, z) = \frac{(E_0 - E_1)a}{\pi}\left[1 - \frac{|z|}{a}\tan^{-1}\left(\frac{a}{|z|}\right)\right]$$

*For integrals of the kind encountered here, see *Watson* (Chapter 13), *Gradshteyn and Ryzhik, Magnus, Oberhettinger, and Soni*, or the *Bateman Manuscript Project.*

For $|z| \gg a$ thus reduces to (3.182) with $r = |z|$, while for $|z| \to 0$ it is approximated by the first term. In the plane of the opening ($z = 0$) the potential $\Phi^{(1)}$ is

$$\Phi^{(1)}(\rho, 0) = \frac{(E_0 - E_1)}{\pi} \sqrt{a^2 - \rho^2}$$

for $0 \leq \rho < a$ (and zero, of course, for $\rho \geq a$). The *tangential electric field in the opening* is a radial field,

$$\mathbf{E}_{\tan}(\rho, 0) = \frac{(E_0 - E_1)}{\pi} \frac{\boldsymbol{\rho}}{\sqrt{a^2 - \rho^2}} \tag{3.186}$$

The *normal component* of electric field in the opening is, from the first equation in (3.171), just the average of the uniform fields above and below the plane, that is,

$$E_z(\rho, 0) = -\tfrac{1}{2}(E_0 + E_1) \tag{3.187}$$

We note that the magnitude of the electric field has a square root singularity at the edge of the opening, in agreement with the considerations of Section 2.11. The surface-charge densities on the upper and lower sides of the conducting plane in the neighborhood of the hole can be evaluated in a straightforward manner. The explicit calculation is left to the problems.

Equipotential contours near the circular hole for the full potential (3.170) are shown in Fig. 3.14 for the situation where $E_1 = 0$. At distances more than

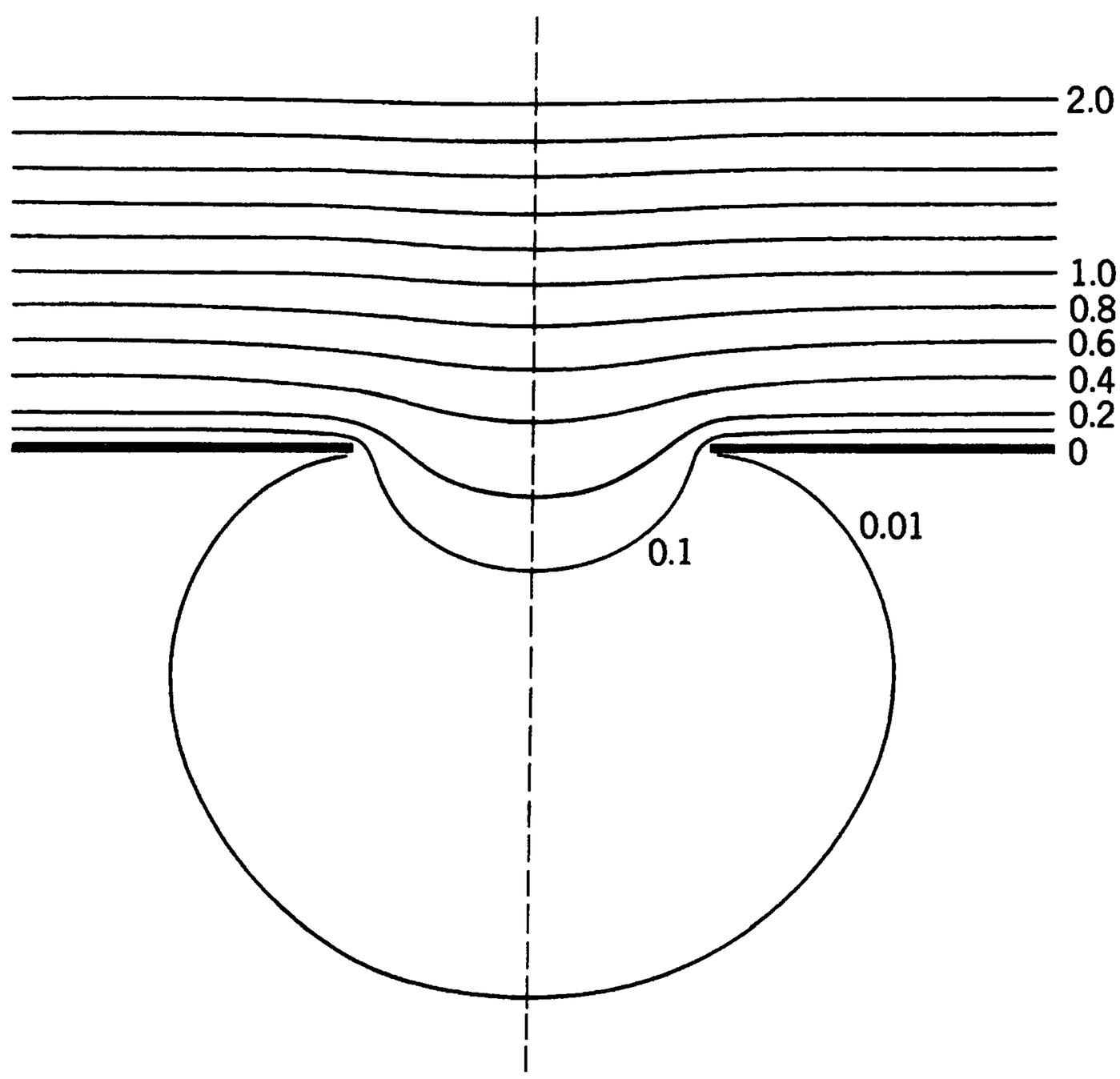


**Figure 3.14** Equipotential contours near a circular hole in a conducting plane with a normal electric field $E_0$ far from the hole on one side and no field asymptotically on the other ($E_1 = 0$). The numbers are the values of the potential $\Phi$ in units of $aE_0$. The distribution is rotationally symmetric about the vertical dashed line through the center of the hole.

two or three times the radius away from the hole, its presence is hardly discernible.

The classic problem of a charged conducting disc is discussed in detail by Sneddon (*op. cit.*). The mixed boundary conditions for the disc or hole can be avoided by separating the Laplace equation in elliptic coordinates. The disc (or hole) is then taken to be the limiting form of an oblate spheroidal surface. For this approach, see, for example, *Smythe* (pp. 124, 171) or *Jeans* (p. 244).

## *References and Suggested Reading*

The subjects of the special functions of mathematical physics, the solution of ordinary differential equations, hypergeometric functions, and Sturm–Liouville theory are covered in many books. For the reader who does not already have his favorite, some of the possibilities are

Arfken
Dennery and Kryzwicki
Morse and Feshbach
Whittaker and Watson

A more elementary treatment, with well-chosen examples and problems, can be found in

Hildebrand, Chapters 4, 5, and 8

A somewhat old-fashioned source of the theory and practice of Legendre polynomials and spherical harmonics, with many examples and problems, is

Byerly

For purely mathematical properties of spherical functions one of the most useful one-volume references is

Magnus, Oberhettinger, and Soni

For more detailed mathematical properties, see

Watson, for Bessel functions
Bateman Manuscript Project books, for all types of special functions

Electrostatic problems in cylindrical, spherical, and other coordinates are discussed extensively in

Durand, Chapter XI
Jeans, Chapter VIII
Smythe, Chapter V
Stratton, Chapter III

## *Problems*

**3.1** Two concentric spheres have radii $a$, $b$ ($b > a$) and each is divided into two hemispheres by the same horizontal plane. The upper hemisphere of the inner sphere and the lower hemisphere of the outer sphere are maintained at potential $V$. The other hemispheres are at zero potential

Determine the potential in the region $a \leq r \leq b$ as a series in Legendre polynomials. Include terms at least up to $l = 4$. Check your solution against known results in the limiting cases $b \to \infty$, and $a \to 0$.

**3.2** A spherical surface of radius $R$ has charge uniformly distributed over its surface with a density $Q/4\pi R^2$, except for a spherical cap at the north pole, defined by the cone $\theta = \alpha$.

**(a)** Show that the potential inside the spherical surface can be expressed as

$$\Phi = \frac{Q}{8\pi\epsilon_0} \sum_{l=0}^{\infty} \frac{1}{2l+1} [P_{l+1}(\cos\alpha) - P_{l-1}(\cos\alpha)] \frac{r^l}{R^{l+1}} P_l(\cos\theta)$$

where, for $l = 0$, $P_{l-1}(\cos\alpha) = -1$. What is the potential outside?

**(b)** Find the magnitude and the direction of the electric field at the origin.

**(c)** Discuss the limiting forms of the potential (part a) and electric field (part b) as the spherical cap becomes (1) very small, and (2) so large that the area with charge on it becomes a very small cap at the south pole.

**3.3** A thin, flat, conducting, circular disc of radius $R$ is located in the $x$-$y$ plane with its center at the origin, and is maintained at a fixed potential $V$. With the information that the charge density on a disc at fixed potential is proportional to $(R^2 - \rho^2)^{-1/2}$, where $\rho$ is the distance out from the center of the disc,

**(a)** show that for $r > R$ the potential is

$$\Phi(r, \theta, \phi) = \frac{2V}{\pi} \frac{R}{r} \sum_{l=0}^{\infty} \frac{(-1)^l}{2l+1} \left(\frac{R}{r}\right)^{2l} P_{2l}(\cos\theta)$$

**(b)** find the potential for $r < R$.

**(c)** What is the capacitance of the disc?

**3.4** The surface of a hollow conducting sphere of inner radius $a$ is divided into an *even number* of equal segments by a set of planes; their common line of intersection is the $z$ axis and they are distributed uniformly in the angle $\phi$. (The segments are like the skin on wedges of an apple, or the earth's surface between successive meridians of longitude.) The segments are kept at fixed potentials $\pm V$, alternately.

**(a)** Set up a series representation for the potential inside the sphere for the general case of $2n$ segments, and carry the calculation of the coefficients in the series far enough to determine exactly which coefficients are different from zero. For the nonvanishing terms, exhibit the coefficients as an integral over $\cos\theta$.

**(b)** For the special case of $n = 1$ (two hemispheres) determine explicitly the potential up to and including all terms with $l = 3$. By a coordinate transformation verify that this reduces to result (3.36) of Section 3.3.

**3.5** A hollow sphere of inner radius $a$ has the potential specified on its surface to be $\Phi = V(\theta, \phi)$. Prove the equivalence of the two forms of solution for the potential inside the sphere:

**(a)** $$\Phi(\mathbf{x}) = \frac{a(a^2 - r^2)}{4\pi} \int \frac{V(\theta', \phi')}{(r^2 + a^2 - 2ar\cos\gamma)^{3/2}} d\Omega'$$

where $\cos\gamma = \cos\theta\cos\theta' + \sin\theta\sin\theta'\cos(\phi - \phi')$.

**(b)** $$\Phi(\mathbf{x}) = \sum_{l=0}^{\infty} \sum_{m=-l}^{l} A_{lm} \left(\frac{r}{a}\right)^l Y_{lm}(\theta, \phi)$$

where $A_{lm} = \int d\Omega'\, Y^*_{lm}(\theta', \phi') V(\theta', \phi')$.

**3.6** Two point charges $q$ and $-q$ are located on the $z$ axis at $z = +a$ and $z = -a$, respectively.

**(a)** Find the electrostatic potential as an expansion in spherical harmonics and powers of $r$ for both $r > a$ and $r < a$.

**(b)** Keeping the product $qa \equiv p/2$ constant, take the limit of $a \to 0$ and find the potential for $r \neq 0$. This is by definition a dipole along the $z$ axis and its potential.

**(c)** Suppose now that the dipole of part b is surrounded by a *grounded* spherical shell of radius $b$ concentric with the origin. By linear superposition find the potential everywhere inside the shell.

**3.7** Three point charges $(q, -2q, q)$ are located in a straight line with separation $a$ and with the middle charge $(-2q)$ at the origin of a grounded conducting spherical shell of radius $b$, as indicated in the sketch.

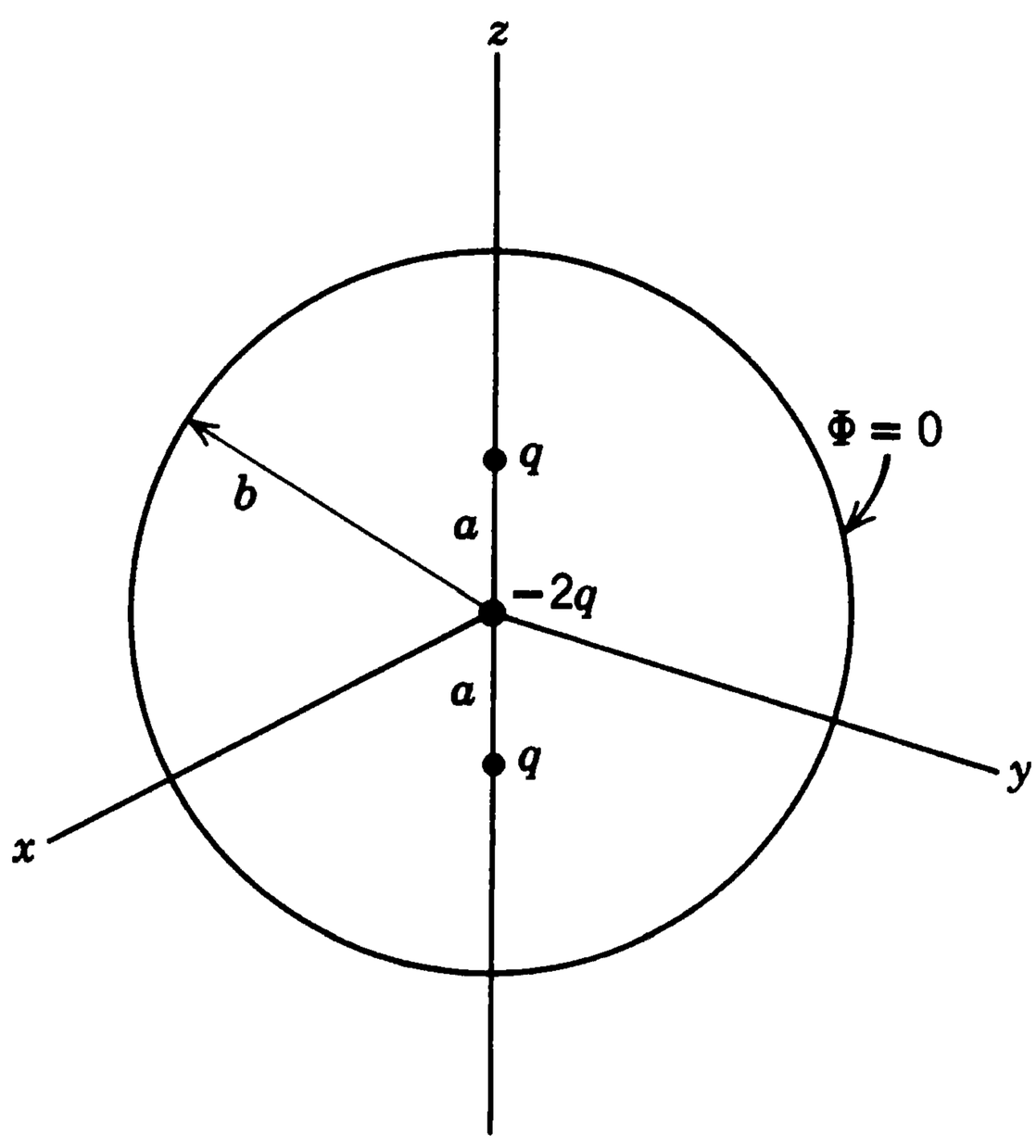


**Problem 3.7**

**(a)** Write down the potential of the three charges in the absence of the grounded sphere. Find the limiting form of the potential as $a \to 0$, but the product $qa^2 = Q$ remains finite. Write this latter answer in spherical coordinates.

**(b)** The presence of the grounded sphere of radius $b$ alters the potential for $r < b$. The added potential can be viewed as caused by the surface-charge density induced on the inner surface at $r = b$ or by image charges located at $r > b$. Use linear superposition to satisfy the boundary conditions and find the potential everywhere inside the sphere for $r < a$ and $r > a$. Show that in the limit $a \to 0$,

$$\Phi(r, \theta, \phi) \to \frac{Q}{2\pi\epsilon_0 r^3}\left(1 - \frac{r^5}{b^5}\right)P_2(\cos\theta)$$

**3.8** There is a puzzling aspect of the solution (3.136) for the potential inside a grounded sphere with a uniformly charged wire along a diameter. Very close to the wire (i.e., for $\rho = r \sin\theta \ll b$), the potential should be that of a uniformly charged wire, namely, $\Phi = (Q/4\pi\epsilon_0 b)\ln(b/\rho) + \Phi_0$. The solution (3.136) does not explicitly have this behavior.

**(a)** Show by use of the Legendre differential equation (3.10) and some integration by parts, that $\ln(\operatorname{cosec}\theta)$ has the appropriate expansion in spherical harmonics to permit the solution (3.136) to be written in the alternative form,

$$\Phi(\mathbf{x}) = \frac{Q}{4\pi\epsilon_0 b}\left\{\ln\left(\frac{2b}{r\sin\theta}\right) - 1 - \sum_{j=1}^{\infty}\frac{4j+1}{2j(2j+1)}\left(\frac{r}{b}\right)^{2j}P_{2j}(\cos\theta)\right\}$$

in which the expected behavior near the wire is manifest. Give an interpretation of the constant term $\Phi_0 = -Q/4\pi\epsilon_0 b$. Note that in this form, for any $r/b < 1$ the Legendre polynomial series is rapidly convergent at all angles.

**(b)** Show by use of the expansion (3.38) that

$$\frac{1}{2}\left(\frac{1}{\sin\theta/2} + \frac{1}{\cos\theta/2}\right) = 2\sum_{j=0}^{\infty} P_{2j}(\cos\theta)$$

and that therefore the charge density on the inner surface of the sphere, Eq. (3.137), can be expressed alternatively as

$$\sigma(\theta) = -\frac{Q}{4\pi b^2}\left\{\frac{1}{2}\left(\frac{1}{\sin\theta/2} + \frac{1}{\cos\theta/2}\right) - \sum_{j=0}^{\infty}\frac{1}{2j+1}P_{2j}(\cos\theta)\right\}$$

The (integrable) singular behavior at $\theta = 0$ and $\theta = \pi$ is now exhibited explicitly. The series provides corrections in $\ln(1/\theta)$ as $\theta \to 0$.

**3.9** A hollow right circular cylinder of radius $b$ has its axis coincident with the $z$ axis and its ends at $z = 0$ and $z = L$. The potential on the end faces is zero, while the potential on the cylindrical surface is given as $V(\phi, z)$. Using the appropriate separation of variables in cylindrical coordinates, find a series solution for the potential anywhere inside the cylinder.

**3.10** For the cylinder in Problem 3.9 the cylindrical surface is made of two equal half-cylinders, one at potential $V$ and the other at potential $-V$, so that

$$V(\phi, z) = \begin{cases} V & \text{for } -\pi/2 < \phi < \pi/2 \\ -V & \text{for } \pi/2 < \phi < 3\pi/2 \end{cases}$$

**(a)** Find the potential inside the cylinder.

**(b)** Assuming $L \gg b$, consider the potential at $z = L/2$ as a function of $\rho$ and $\phi$ and compare it with two-dimensional Problem 2.13.

**3.11** A modified Bessel–Fourier series on the interval $0 \le \rho \le a$ for an arbitrary function $f(\rho)$ can be based on the "homogeneous" boundary conditions:

$$\text{At } \rho = 0, \qquad \rho\, J_\nu(k\rho)\frac{dJ_\nu(k'\rho)}{d\rho} = 0$$

$$\text{At } \rho = a, \qquad \frac{d}{d\rho}\ln[J_\nu(k\rho)] = -\frac{\lambda}{a} \qquad (\lambda \text{ real})$$

The first condition restricts $\nu$. The second condition yields eigenvalues $k = y_{\nu n}/a$, where $y_{\nu n}$ is the $n$th positive root of $x\, dJ_\nu(x)/dx + \lambda J_\nu(x) = 0$.

**(a)** Show that the Bessel functions of different eigenvalues are orthogonal in the usual way.

**(b)** Find the normalization integral and show that an arbitrary function $f(\rho)$ can be expanded on the interval in the modified Bessel–Fourier series

$$f(\rho) = \sum_{n=1}^{\infty} A_n J_\nu\left(\frac{y_{\nu n}\rho}{a}\right)$$

with the coefficients $A_n$ given by

$$A_n = \frac{2}{a^2}\left[\left(1 - \frac{\nu^2}{y_{\nu n}^2}\right)J_\nu^2(y_{\nu n}) + \left(\frac{dJ_\nu(y_{\nu n})}{dy_{\nu n}}\right)^2\right]^{-1}\int_0^a f(\rho)\,\rho\, J_\nu\left(\frac{y_{\nu n}\rho}{a}\right)d\rho$$

The dependence on $\lambda$ is implicit in this form, but the square bracket has alternative forms:

$$\left[\left(1 - \frac{\nu^2}{y_{\nu n}^2}\right)J_\nu^2(y_{\nu n}) + \left(\frac{dJ_\nu(y_{\nu n})}{dy_{\nu n}}\right)^2\right] = \left(1 + \frac{\lambda^2 - \nu^2}{y_{\nu n}^2}\right)J_\nu^2(y_{\nu n})$$
$$= \left(1 + \frac{y_{\nu n}^2 - \nu^2}{\lambda^2}\right)\left[\frac{dJ_\nu(y_{\nu n})}{dy_{\nu n}}\right]^2$$
$$= [J_\nu^2(y_{\nu n}) - J_{\nu-1}(y_{\nu n})J_{\nu+1}(y_{\nu n})]$$

For $\lambda \to \infty$ we recover the result of (3.96) and (3.97). The choice $\lambda = 0$ is another simple alternative.

**3.12** An infinite, thin, plane sheet of conducting material has a circular hole of radius $a$ cut in it. A thin, flat disc of the same material and slightly smaller radius lies in the plane, filling the hole, but separated from the sheet by a very narrow insulating ring. The disc is maintained at a fixed potential $V$, while the infinite sheet is kept at zero potential.

**(a)** Using appropriate cylindrical coordinates, find an integral expression involving Bessel functions for the potential at any point above the plane.

**(b)** Show that the potential a perpendicular distance $z$ above the *center* of the disc is

$$\Phi_0(z) = V\left(1 - \frac{z}{\sqrt{a^2 + z^2}}\right)$$

**(c)** Show that the potential a perpendicular distance $z$ above the *edge* of the disc is

$$\Phi_a(z) = \frac{V}{2}\left[1 - \frac{kz}{\pi a}K(k)\right]$$

where $k = 2a/(z^2 + 4a^2)^{1/2}$, and $K(k)$ is the complete elliptic integral of the first kind.

**3.13** Solve for the potential in Problem 3.1, using the appropriate Green function obtained in the text, and verify that the answer obtained in this way agrees with the direct solution from the differential equation.

**3.14** A line charge of length $2d$ with a total charge $Q$ has a linear charge density varying as $(d^2 - z^2)$, where $z$ is the distance from the midpoint. A grounded, conducting, spherical shell of inner radius $b > d$ is centered at the midpoint of the line charge.

**(a)** Find the potential everywhere inside the spherical shell as an expansion in Legendre polynomials.

**(b)** Calculate the surface-charge density induced on the shell.

**(c)** Discuss your answers to parts a and b in the limit that $d \ll b$.

**3.15** Consider the following "spherical cow" model of a battery connected to an external circuit. A sphere of radius $a$ and conductivity $\sigma$ is embedded in a uniform medium of conductivity $\sigma'$. Inside the sphere there is a uniform (chemical) force in the $z$ direction acting on the charge carriers; its strength as an effective electric field entering Ohm's law is $F$. In the steady state, electric fields exist inside and outside the sphere and surface charge resides on its surface.

**(a)** Find the electric field (in addition to $F$) and current density everywhere in space. Determine the surface-charge density and show that the electric dipole moment of the sphere is $p = 4\pi\epsilon_0\sigma a^3 F/(\sigma + 2\sigma')$.

**(b)** Show that the total current flowing out through the upper hemisphere of the sphere is

$$I = \frac{2\sigma\sigma'}{\sigma + 2\sigma'} \cdot \pi a^2 F$$

Calculate the total power dissipation outside the sphere. Using the lumped circuit relations, $P = I^2 R_e = IV_e$, find the effective external resistance $R_e$ and voltage $V_e$.

**(c)** Find the power dissipated within the sphere and deduce the effective internal resistance $R_i$ and voltage $V_i$.

**(d)** Define the total voltage through the relation, $V_t = (R_e + R_i)I$ and show that $V_t = 4aF/3$, as well as $V_e + V_i = V_t$. Show that $IV_t$ is the power supplied by the "chemical" force.

Reference: W. M. Saslow, *Am. J. Phys.* **62**, 495–501 (1994).

**3.16** **(a)** Starting from the Bessel differential equation and appropriate limiting procedures, verify the generalization of (3.108),

$$\frac{1}{k}\,\delta(k - k') = \int_0^\infty \rho J_\nu(k\rho) J_\nu(k'\rho)\, d\rho$$

or equivalently that

$$\frac{1}{\rho}\,\delta(\rho - \rho') = \int_0^\infty k J_\nu(k\rho) J_\nu(k\rho')\, dk$$

where $\mathrm{Re}(\nu) > -1$.

**(b)** Obtain the following expansion:

$$\frac{1}{|\mathbf{x} - \mathbf{x}'|} = \sum_{m=-\infty}^{\infty} \int_0^\infty dk\, e^{im(\phi-\phi')} J_m(k\rho) J_m(k\rho') e^{-k(z_> - z_<)}$$

**(c)** By appropriate limiting procedures prove the following expansions:

$$\frac{1}{\sqrt{\rho^2 + z^2}} = \int_0^\infty e^{-k|z|} J_0(k\rho)\, dk$$

$$J_0(k\sqrt{\rho^2 + \rho'^2 - 2\rho\rho' \cos\phi}) = \sum_{m=-\infty}^{\infty} e^{im\phi} J_m(k\rho) J_m(k\rho')$$

$$e^{ik\rho\cos\phi} = \sum_{m=-\infty}^{\infty} i^m e^{im\phi} J_m(k\rho)$$

**(d)** From the last result obtain an integral representation of the Bessel function:

$$J_m(x) = \frac{1}{2\pi i^m} \int_0^{2\pi} e^{ix\cos\phi - im\phi}\, d\phi$$

Compare the standard integral representations.

**3.17** The Dirichlet Green function for the unbounded space between the planes at $z = 0$ and $z = L$ allows discussion of a point charge or a distribution of charge between parallel conducting planes held at zero potential.

**(a)** Using cylindrical coordinates show that one form of the Green function is

$$G(\mathbf{x}, \mathbf{x}') = \frac{4}{L} \sum_{n=1}^{\infty} \sum_{m=-\infty}^{\infty} e^{im(\phi-\phi')} \sin\left(\frac{n\pi z}{L}\right) \sin\left(\frac{n\pi z'}{L}\right) I_m\left(\frac{n\pi}{L}\rho_<\right) K_m\left(\frac{n\pi}{L}\rho_>\right)$$

**(b)** Show that an alternative form of the Green function is

$$G(\mathbf{x}, \mathbf{x}') = 2 \sum_{m=-\infty}^{\infty} \int_0^\infty dk\, e^{im(\phi-\phi')} J_m(k\rho) J_m(k\rho') \frac{\sinh(kz_<)\sinh[k(L - z_>)]}{\sinh(kL)}$$

**3.18** The configuration of Problem 3.12 is modified by placing a conducting plane held at zero potential parallel to and a distance $L$ away from the plane with the disc insert in it. For definiteness put the grounded plane at $z = 0$ and the other plane with the center of the disc on the $z$ axis at $z = L$.

**(a)** Show that the potential between the planes can be written in cylindrical coordinates $(z, \rho, \phi)$ as

$$\Phi(z, \rho) = V \int_0^\infty d\lambda\, J_1(\lambda) J_0(\lambda\rho/a) \frac{\sinh(\lambda z/a)}{\sinh(\lambda L/a)}$$

**(b)** Show that in the limit $a \to \infty$ with $z$, $\rho$, $L$ fixed the solution of part a reduces to the expected result. Viewing your result as the lowest order answer in an expansion in powers of $a^{-1}$, consider the question of corrections to the lowest order expression if $a$ is *large* compared to $\rho$ and $L$, but not infinite. Are there difficulties? Can you obtain an explicit *estimate* of the corrections?

**(c)** Consider the limit of $L \to \infty$ with $(L - z)$, $a$ and $\rho$ fixed and show that the results of Problem 3.12 are recovered. What about corrections for $L \gg a$, but not $L \to \infty$?

**3.19** Consider a point charge $q$ between two infinite parallel conducting planes held at zero potential. Let the planes be located at $z = 0$ and $z = L$ in a cylindrical coordinate system, with the charge on the $z$ axis at $z = z_0$, $0 < z_0 < L$. Use Green's reciprocation theorem of Problem 1.12 with problem 3.18 as the comparison problem.

**(a)** Show that the amount of induced charge on the plate at $z = L$ inside a circle of radius $a$ whose center is on the $z$ axis is given by

$$Q_L(a) = -\frac{q}{V}\Phi(z_0, 0)$$

where $\Phi(z_0, 0)$ is the potential of Problem 3.18 evaluated at $z = z_0$, $\rho = 0$. Find the *total* charge induced on the upper plate. Compare with the solution (in method and answer) of Problem 1.13.

**(b)** Show that the induced charge *density* on the upper plate can be written as

$$\sigma(\rho) = -\frac{q}{2\pi} \int_0^\infty dk \frac{\sinh(kz_0)}{\sinh(kL)} kJ_0(k\rho)$$

This integral can be expressed (see, e.g., *Gradshteyn* and *Ryzhik*, p. 728, formula 6.666) as an infinite series involving the modified Bessel functions $K_0(n\pi\rho/L)$, showing that at large radial distances the induced charge density falls off as $(\rho)^{-1/2}e^{-\pi\rho/L}$.

**(c)** Show that the charge density at $\rho = 0$ can be written as the series

$$\sigma(0) = -\frac{q}{2\pi L^2} \sum_{n>0,\ \text{odd}} [(n - z_0/L)^{-2} - (n + z_0/L)^{-2}]$$

**3.20** **(a)** From the results of Problem 3.17 or from first principles show that the potential at a point charge $q$ between two infinite parallel conducting planes held at zero potential can be written as

$$\Phi(z, \rho) = \frac{q}{\pi\epsilon_0 L} \sum_{n=1}^{\infty} \sin\left(\frac{n\pi z_0}{L}\right) \sin\left(\frac{n\pi z}{L}\right) K_0\left(\frac{n\pi\rho}{L}\right)$$

where the planes are at $z = 0$ and $z = L$ and the charge is on the $z$ axis at the point $z = z_0$.

**(b)** Calculate the induced surface-charge densities $\sigma_0(\rho)$ and $\sigma_L(\rho)$ on the lower and upper plates. The result for $\sigma_L(\rho)$ is

$$\sigma_L(\rho) = \frac{q}{L^2} \sum_{n=1}^{\infty} (-1)^n n \sin\left(\frac{n\pi z_0}{L}\right) K_0\left(\frac{n\pi\rho}{L}\right)$$

Discuss the connection of this expression with that of Problem 3.19b and 3.19c.

**(c)** From the answer in part b, calculate the total charge $Q_L$ on the plate at $z = L$. By summing the Fourier series or by other means of comparison, check your answer against the known expression of Problem 1.13 [C. Y. Fong and C. Kittel, *Am. J. Phys.* **35**, 1091 (1967).]

**3.21** **(a)** By using the Green function of Problem 3.17b in the limit $L \to \infty$, show that the capacitance of a flat, thin, circular, conducting disc of radius $R$ located parallel to, and a distance $d$ above, a grounded conducting plane is given by

$$\frac{4\pi\epsilon_0}{C} = \int_0^\infty dk(1 - e^{-2kd}) \frac{\left[\int_0^R \rho J_0(k\rho)\sigma(\rho)\, d\rho\right]^2}{\left[\int_0^R \rho\sigma(\rho)\, d\rho\right]^2}$$

where $\sigma(\rho)$ is the charge density on the disc.

**(b)** Use the expression in part a as a variational or stationary principle for $C^{-1}$ with the approximation that $\sigma(\rho) = \text{constant}$. Show explicitly that you obtain the correct limiting value for $C^{-1}$ as $d \ll R$. Determine an approximate value of $C^{-1}$ for an isolated disc ($d \gg R$) and evaluate the ratio of it to the exact result, $4\pi\epsilon_0/C = (\pi/2)R^{-1}$.

**(c)** As a better trial form for $\sigma(\rho)$ consider a linear combination of a constant and $(R^2 - \rho^2)^{-1/2}$, the latter being the correct form for an isolated disc.

For part b the following integrals may be of use:

$$\int_0^\infty dt\left[\frac{J_1(t)}{t}\right]^2 = \frac{4}{3\pi}, \qquad \int_0^\infty \frac{dt\, J_1^2(t)}{t} = \frac{1}{2}$$

**3.22** The geometry of a two-dimensional potential problem is defined in polar coordinates by the surfaces $\phi = 0$, $\phi = \beta$, and $\rho = a$, as indicated in the sketch.

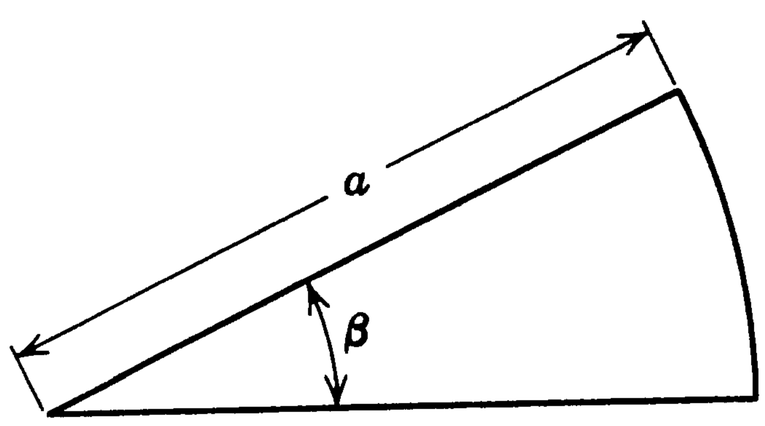


**Problem 3.22**

Using separation of variables in polar coordinates, show that the Green function can be written as

$$G(\rho, \phi; \rho', \phi') = \sum_{m=1}^{\infty} \frac{4}{m} \rho_<^{m\pi/\beta}\left(\frac{1}{\rho_>^{m\pi/\beta}} - \frac{\rho_>^{m\pi/\beta}}{a^{2m\pi/\beta}}\right) \sin\left(\frac{m\pi\phi}{\beta}\right) \sin\left(\frac{m\pi\phi'}{\beta}\right)$$

Problem 2.25 may be of use.

**3.23** A point charge $q$ is located at the point $(\rho', \phi', z')$ inside a grounded cylindrical box defined by the surfaces $z = 0$, $z = L$, $\rho = a$. Show that the potential inside the box can be expressed in the following alternative forms:

$$\Phi(\mathbf{x}, \mathbf{x}') = \frac{q}{\pi\epsilon_0 a} \sum_{m=-\infty}^{\infty} \sum_{n=1}^{\infty} \frac{e^{im(\phi-\phi')} J_m\left(\frac{x_{mn}\rho}{a}\right) J_m\left(\frac{x_{mn}\rho'}{a}\right)}{x_{mn} J_{m+1}^2(x_{mn}) \sinh\left(\frac{x_{mn}L}{a}\right)}$$

$$\times \sinh\left[\frac{x_{mn}}{a} z_<\right] \sinh\left[\frac{x_{mn}}{a}(L - z_>)\right]$$

$$\phi(\mathbf{x}, \mathbf{x}') = \frac{q}{\pi\epsilon_0 L} \sum_{m=-\infty}^{\infty} \sum_{n=1}^{\infty} e^{im(\phi-\phi')} \sin\left(\frac{n\pi z}{L}\right) \sin\left(\frac{n\pi z'}{L}\right) \frac{I_m\left(\frac{n\pi\rho_<}{L}\right)}{I_m\left(\frac{n\pi a}{L}\right)}$$

$$\times \left[I_m\left(\frac{n\pi a}{L}\right) K_m\left(\frac{n\pi\rho_>}{L}\right) - K_m\left(\frac{n\pi a}{L}\right) I_m\left(\frac{n\pi\rho_>}{L}\right)\right]$$

$$\Phi(\mathbf{x}, \mathbf{x}') = \frac{2q}{\pi\epsilon_0 L a^2} \sum_{m=-\infty}^{\infty} \sum_{k=1}^{\infty} \sum_{n=1}^{\infty} \frac{e^{im(\phi-\phi')} \sin\left(\frac{k\pi z}{L}\right) \sin\left(\frac{k\pi z'}{L}\right) J_m\left(\frac{x_{mn}\rho}{a}\right) J_m\left(\frac{x_{mn}\rho'}{a}\right)}{\left[\left(\frac{x_{mn}}{a}\right)^2 + \left(\frac{k\pi}{L}\right)^2\right] J_{m+1}^2(x_{mn})}$$

Discuss the relation of the last expansion (with its extra summation) to the other two.

**3.24** The walls of the conducting cylindrical box of Problem 3.23 are all at zero potential, except for a disc in the upper end, defined by $\rho = b < a$, at potential $V$.

**(a)** Using the various forms of the Green function obtained in Problem 3.23, find three expansions for the potential inside the cylinder.

**(b)** For each series, calculate numerically the ratio of the potential at $\rho = 0$, $z = L/2$ to the potential of the disc, assuming $b = L/4 = a/2$. Try to obtain at least two-significant-figure accuracy. Is one series less rapidly convergent than the others? Why?
(*Abramowitz and Stegun* have tables; Mathematica has Bessel functions, as does the software of *Press et al.*)

**3.25** Consider the surface-charge densities for the problem of Section 3.13 of the conducting plane with a circular hole of radius $a$.

**(a)** Show that the surface-charge densities on the top and bottom of the plane for $\rho \geq a$ are

$$\sigma_+(\rho) = -\epsilon_0 E_0 + \Delta\sigma(\rho)$$
$$\sigma_-(\rho) = \epsilon_0 E_1 + \Delta\sigma(\rho)$$

where

$$\Delta\sigma(\rho) = -\epsilon_0 \frac{(E_0 - E_1)}{\pi} \left[\frac{a}{\sqrt{\rho^2 - a^2}} - \sin^{-1}\left(\frac{a}{\rho}\right)\right]$$

How does $\Delta\sigma(\rho)$ behave for large $\rho$? Is $\Delta\sigma(\rho)$, defined in terms of $\Phi^{(1)}$, zero for $\rho < a$? Explain.

**(b)** Show by direct integration that

$$\lim_{R\to\infty}\left[2\pi\int_a^R d\rho\,\rho(\sigma_+ + \sigma_-) + 2\pi\epsilon_0\int_0^R d\rho\,\rho(E_0 - E_1)\right] = 0$$

Interpret.

**3.26** Consider the Green function appropriate for Neumann boundary conditions for the volume $V$ between the concentric spherical surfaces defined by $r = a$ and $r = b$, $a < b$. To be able to use (1.46) for the potential, impose the simple constraint (1.45). Use an expansion in spherical harmonics of the form,

$$G(\mathbf{x}, \mathbf{x}') = \sum_{l=0}^{\infty} g_l(r, r')P_l(\cos\gamma)$$

where $g_l(r, r') = r_<^l/r_>^{l+1} + f_l(r, r')$.

**(a)** Show that for $l > 0$, the radial Green function has the symmetric form

$$g_l(r, r') = \frac{r_<^l}{r_>^{l+1}} + \frac{1}{(b^{2l+1} - a^{2l+1})}\left[\frac{l+1}{l}(rr')^l + \frac{l}{l+1}\frac{(ab)^{2l+1}}{(rr')^{l+1}} + a^{2l+1}\left(\frac{r^l}{r'^{l+1}} + \frac{r'^l}{r^{l+1}}\right)\right]$$

**(b)** Show that for $l = 0$

$$g_0(r, r') = \frac{1}{r_>} - \left(\frac{a^2}{a^2 + b^2}\right)\frac{1}{r'} + f(r)$$

where $f(r)$ is arbitrary. Show explicitly in (1.46) that answers for the potential $\Phi(\mathbf{x})$ are independent of $f(r)$.
[The arbitrariness in the Neumann Green function can be removed by symmetrizing $g_0$ in $r$ and $r'$ with a suitable choice of $f(r)$.]

**3.27** Apply the Neumann Green function of Problem 3.26 to the situation in which the normal electric field is $E_r = -E_0\cos\theta$ at the outer surface ($r = b$) and is $E_r = 0$ on the inner surface ($r = a$).

**(a)** Show that the electrostatic potential inside the volume $V$ is

$$\Phi(\mathbf{x}) = E_0\frac{r\cos\theta}{1 - p^3}\left(1 + \frac{a^3}{2r^3}\right)$$

where $p = a/b$. Find the components of the electric field,

$$E_r(r, \theta) = -E_0\frac{\cos\theta}{1 - p^3}\left(1 - \frac{a^3}{r^3}\right), \qquad E_\theta(r, \theta) = E_0\frac{\sin\theta}{1 - p^3}\left(1 + \frac{a^3}{2r^3}\right)$$

**(b)** Calculate the Cartesian or cylindrical components of the field, $E_z$ and $E_\rho$, and make a sketch or computer plot of the lines of electric force for a typical case of $p = 0.5$.