Triac Controller and Power Supply

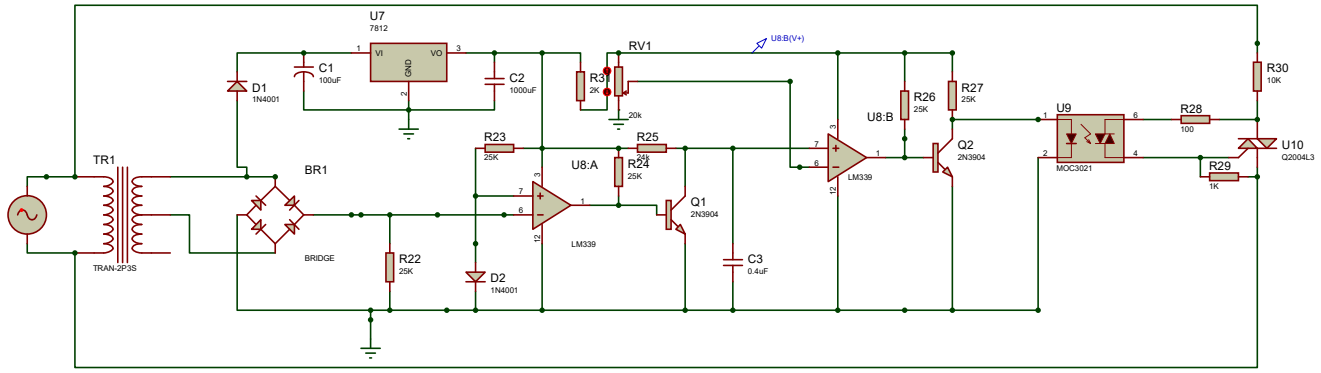

Sensor Interface

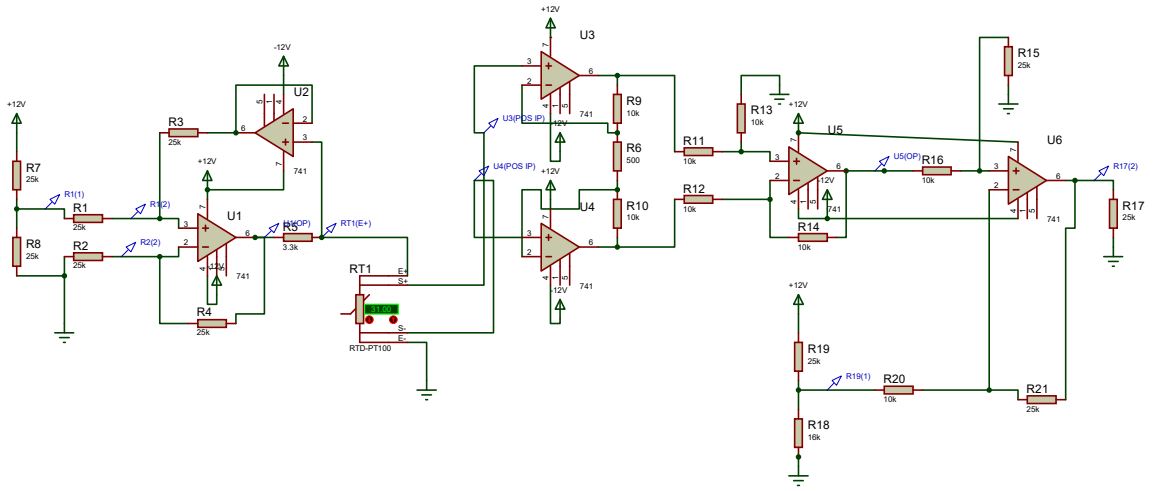
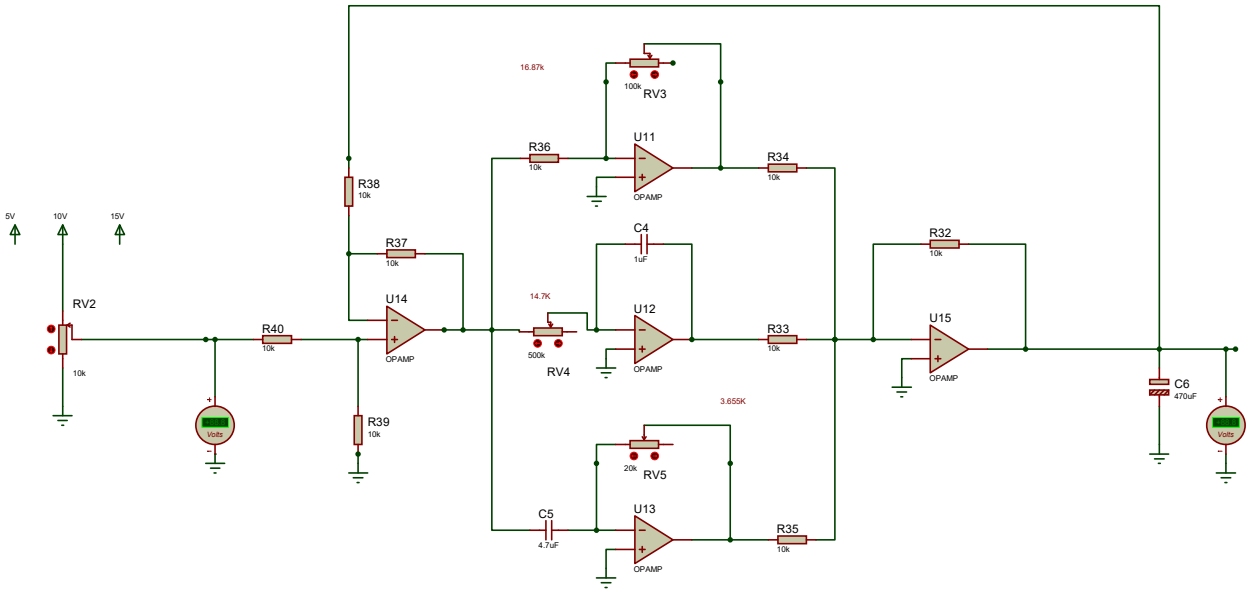
PID Controller