Worldwide Contacts | www.tyco-fire.com

# Series TY-B – 2.8, 5.6, and 8.0 K-factor Upright, Pendent, and Recessed Pendent Sprinklers Standard Response, Standard Coverage

**IMPORTANT**

*Refer to Technical Data Sheet TFP2300 for warnings pertaining to regulatory and health information.*

*Always refer to Technical Data Sheet TFP700 for the "INSTALLER WARNING" that provides cautions with respect to handling and installation of sprinkler systems and components. Improper handling and installation can permanently damage a sprinkler system or its components and cause the sprinkler to fail to operate in a fire situation or cause it to operate prematurely.*

Scan the QR code or enter the URL in a web browser to access the most up-to-date electronic version of this document. Data rates may apply.

docs.jci.com/tycofire/tfp151

## General Description

The TYCO Series TY-B 2.8, 5.6, and 8.0 K-factor, Upright, Pendent, and Recessed Pendent Sprinklers described herein are standard response, standard coverage, decorative 5 mm glass bulb-type spray sprinklers. They are designed for use in light, ordinary, or extra-hazard commercial occupancies such as banks, hotels, shopping malls, factories, refineries, and chemical plants.

The TY-B Recessed Pendent Sprinkler, where applicable, is intended for use in areas with a finished ceiling. It uses a two-piece Style 10 (1/2 in. NPT) or Style 40 (3/4 in. NPT) Recessed Escutcheon. The Recessed Escutcheon provides 1/2 in. (12,7 mm) of recessed adjustment or up to 3/4 in. (19,1 mm) of total adjustment from the flush pendent position. The adjustment provided by the Recessed Escutcheon reduces the accuracy to which the fixed pipe drops to the sprinklers must be cut.

Corrosion-resistant coatings, where applicable, are utilized to extend the life of copper alloy sprinklers beyond what would be obtained when exposed to corrosive atmospheres. Although corrosion-resistant coated sprinklers have passed the standard corrosion tests of the applicable approval agencies, the testing is not representative of all possible corrosive atmospheres. Consequently, it is recommended that the end-user be consulted about the suitability of these coatings for any given corrosive environment. The effects of ambient temperature, concentration of chemicals, and gas/chemical velocity, should be considered as a minimum, along with the corrosive nature of the chemical to which the sprinklers will be exposed.

Series TY-B Upright and Pendent Sprinklers may be used in intermediate level applications when the appropriate sprinkler type is installed and properly protected. For detailed information about intermediate level versions of Series TY-B sprinklers, refer to Technical Data Sheet TFP351. For additional guidance on sprinkler guards, shields, and intermediate level accessories, refer to Technical Data Sheet TFP780.

For in-rack applications where sprinklers are protected by solid shelves or horizontal barriers, use the unshielded Series TY-B Upright and Pendent Sprinklers, TY3151, TY3251, TY4151 and TY4251, instead of their intermediate level counterparts described in Technical Data Sheet TFP351.

**NOTICE**

*The Series TY-B 2.8, 5.6, and 8.0 K-factor, Upright, Pendent, and Recessed Pendent Sprinklers described herein must be installed and maintained in compliance with this document, as well as with the applicable standards of the National Fire Protection Association (NFPA), in addition to the standards of any other authorities having jurisdiction. Failure to do so may impair the performance of these devices.*

*The owner is responsible for maintaining their fire protection system and devices in proper operating condition. Contract the installing contractor or product manufacturer with any questions.*

*NFPA 13 prohibits installation of 1/2 in. NPT sprinklers with K-factors greater than 5.6 in new construction. They are intended for retrofit in existing sprinkler systems only.*

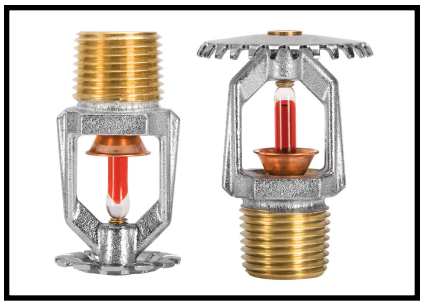

## Sprinkler Identification Numbers (SIN)

**TY1151 . . . Upright 2.8K, 1/2 in. NPT**
**TY1251 . . . Pendent 2.8K, 1/2 in. NPT**
**TY3151 . . . Upright 5.6K, 1/2 in. NPT**
**TY3251 . . . Pendent 5.6K, 1/2 in. NPT**
**TY4151 . . . Upright 8.0K, 3/4 in. NPT**
**TY4251 . . . Pendent 8.0K, 3/4 in. NPT**
**TY4851 . . . Upright 8.0K, 1/2 in. NPT**
**TY4951 . . . Pendent 8.0K, 1/2 in. NPT**

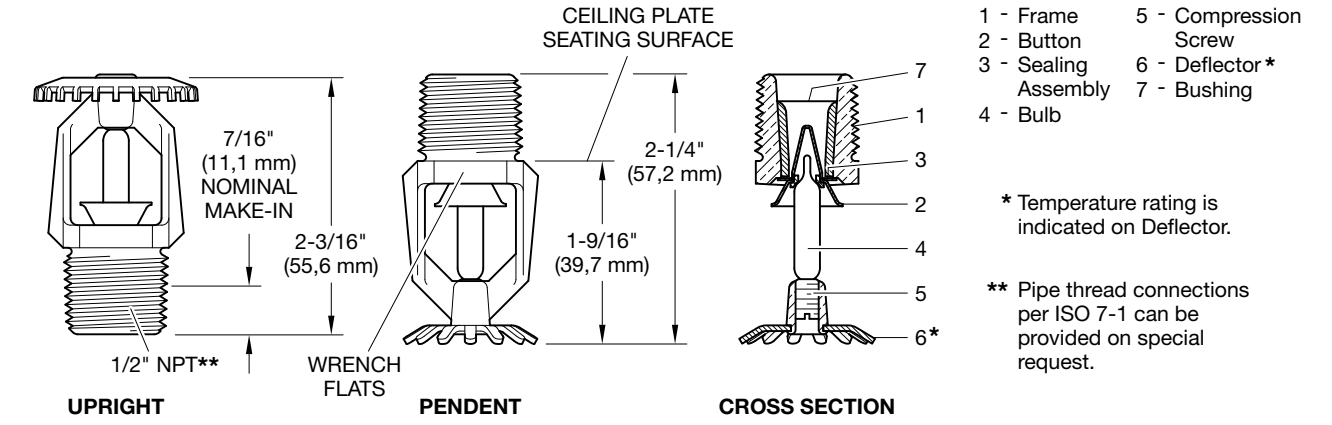


***FIGURE 1***
***SERIES TY-B UPRIGHT (TY1151) AND PENDENT (TY1251) SPRINKLERS***
***2.8 K-FACTOR, 1/2 IN. NPT, STANDARD RESPONSE***

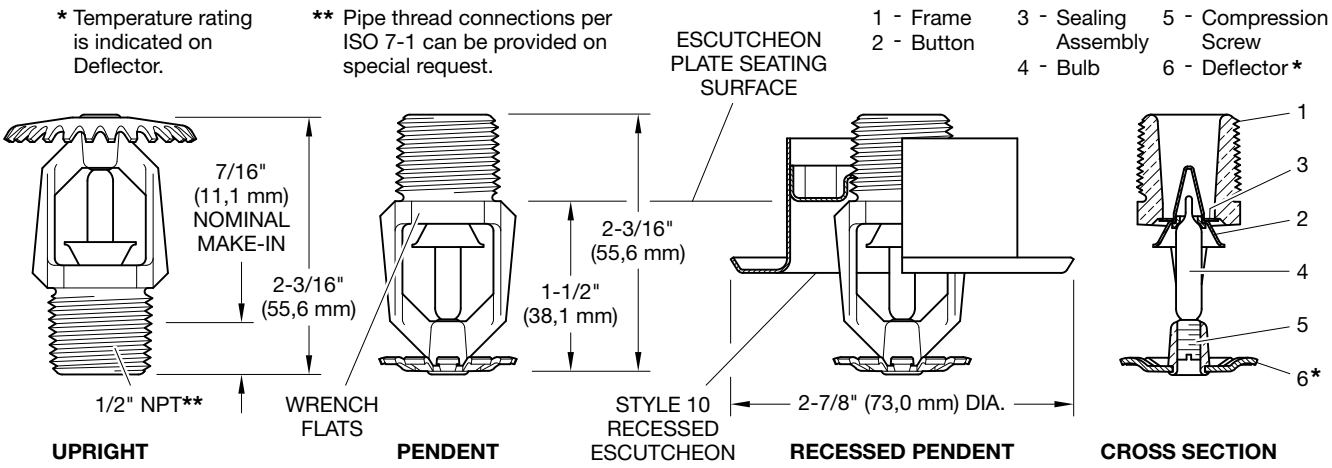


***FIGURE 2***
***SERIES TY-B UPRIGHT (TY3151) AND PENDENT (TY3251) SPRINKLERS***
***5.6 K-FACTOR, 1/2 IN. NPT, STANDARD RESPONSE***

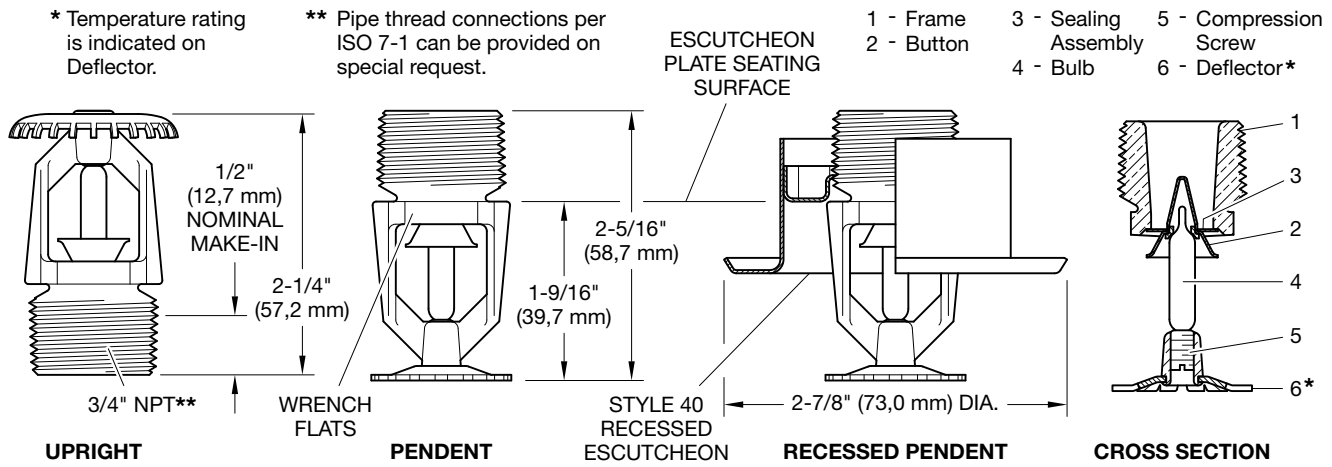


***FIGURE 3***
***SERIES TY-B UPRIGHT (TY4151) AND PENDENT (TY4251) SPRINKLERS***
***8.0 K-FACTOR, 3/4 IN. NPT, STANDARD RESPONSE***

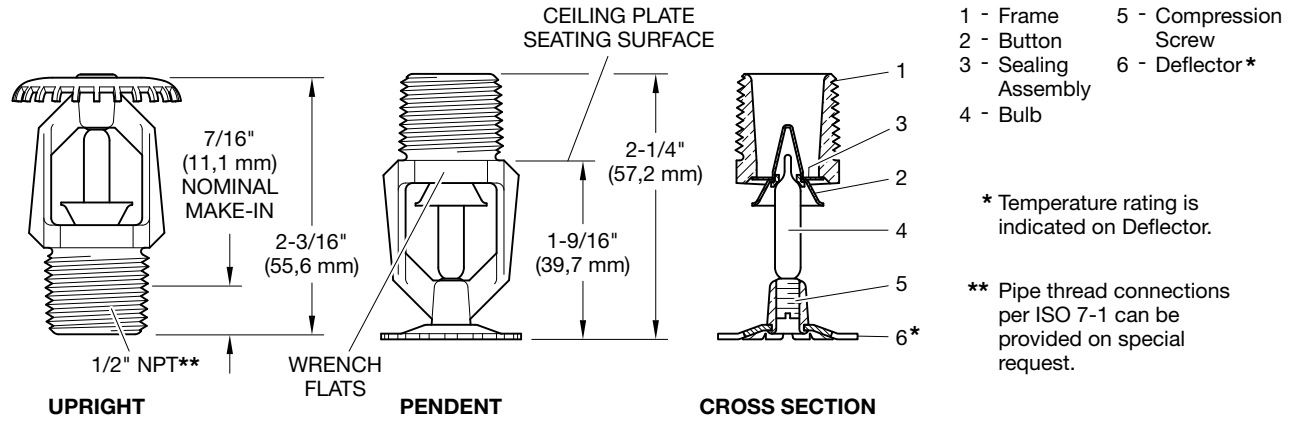


1 - Frame
2 - Button
3 - Sealing Assembly
4 - Bulb
5 - Compression Screw
6 - Deflector*

* Temperature rating is indicated on Deflector.

** Pipe thread connections per ISO 7-1 can be provided on special request.

***FIGURE 4***
***SERIES TY-B UPRIGHT (TY4851) AND PENDENT (TY4951) SPRINKLERS***
***8.0 K-FACTOR, 1/2 IN. NPT, STANDARD RESPONSE***

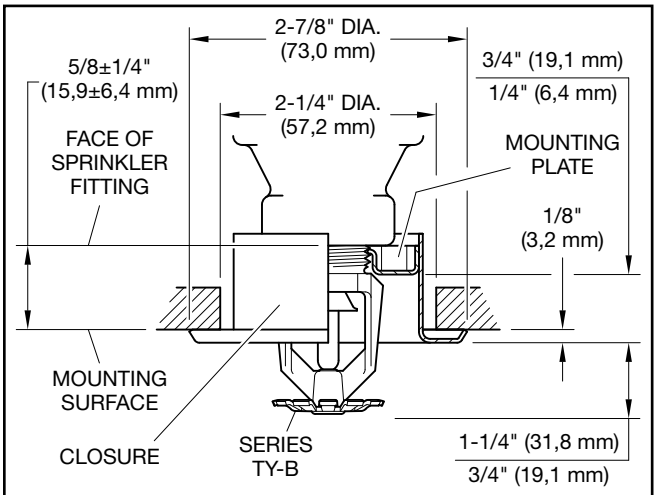


***FIGURE 5***
***SERIES TY-B RECESSED PENDENT SPRINKLER ASSEMBLY WITH TWO-PIECE 3/4 IN. TOTAL ADJUSTMENT STYLE 10 RECESSED ESCUTCHEON***
***5.6 K-FACTOR, 1/2 IN. NPT***

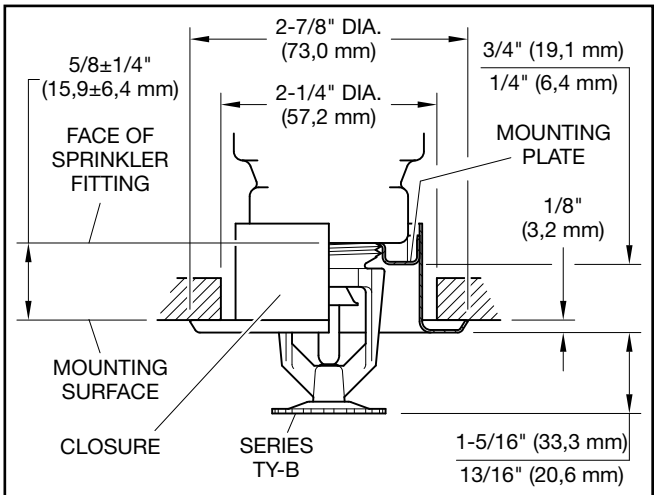


***FIGURE 6***
***SERIES TY-B RECESSED PENDENT SPRINKLER ASSEMBLY WITH TWO-PIECE 3/4 IN. TOTAL ADJUSTMENT STYLE 40 RECESSED ESCUTCHEON***
***8.0 K-FACTOR, 3/4 IN. NPT***

# *Technical Data*

**Approvals**
UL and C-UL Listed
FM, LPCB, and VdS Approved

***Note:*** *For complete approval information, including corrosion-resistant status, see Tables A, B, and C.*

**Maximum Working Pressure**
See Table D

**Discharge Coefficient**
K=2.8 gpm/psi½ (40,3 Lpm/bar½)
K=5.6 gpm/psi½ (80,6 Lpm/bar½)
K=8.0 gpm/psi½ (115,2 Lpm/bar½)

**Temperature Ratings**
See Tables A, B and C

**Finishes**
Sprinkler: See Table E

Recessed Escutcheon: Signal or Pure White, Grey Aluminum, Chrome Plated, or Natural Brass

**Physical Characteristics**
Frame . . . . . Bronze
Button . . . . . Brass/Copper
Sealing Assembly . . Beryllium Nickel w/TEFLON
Bulb . . . . . Glass
Compression Screw . . . . . Bronze
Deflector . . . . . Copper
Bushing (K=2.8). . . . . Bronze

# *Operation*

The glass bulb contains a fluid which expands when exposed to heat. When the rated temperature is reached, the fluid expands sufficiently to shatter the glass bulb, allowing the sprinkler to activate and water to flow.

# *Design Criteria*

The TYCO Series TY-B 2.8, 5.6, and 8.0 K-factor, Upright, Pendent, and Recessed Pendent Sprinklers are intended for fire protection systems designed in accordance with the standard installation rules recognized by the applicable Listing or Approval agency, such as UL Listing based on the requirements of NFPA 13 and FM Approval based on the requirements of the FM Global Loss Prevention Data Sheets. Use only the Style 10 or 40 Recessed Escutcheon, as applicable, for recessed pendent installations.

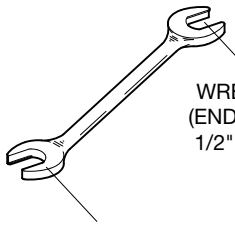


***FIGURE 7***
***W-TYPE 6***
***SPRINKLER WRENCH***

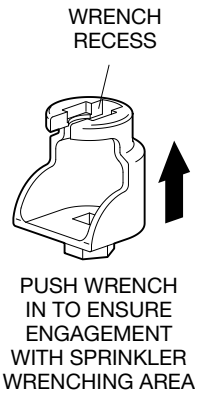


***FIGURE 8***
***W-TYPE 7 RECESSED***
***SPRINKLER WRENCH***

# Installation

The TYCO Series TY-B 2.8, 5.6, and 8.0 K-factor, Upright, Pendent, and Recessed Pendent Sprinklers must be installed in accordance with this section.

**General Instructions**
Do not install any bulb type sprinkler if the bulb is cracked or there is a loss of liquid from the bulb. With the sprinkler held horizontally, a small air bubble should be present. The diameter of the air bubble is approximately 1/16 in. (1,6 mm) for the 135°F (57°C) to 3/32 in. (2,4 mm) for the 360°F (182°C) temperature ratings.

A leak-tight 1/2 in. NPT sprinkler joint should be obtained by applying a minimum-to-maximum torque of 7 to 14 lb-ft (9,5 to 19,0 N·m). Obtain a leak-tight 3/4 in. NPT sprinkler joint by applying a minimum to maximum torque of 10 to 20 lb-ft (13,4 to 26,8 N·m). Higher levels of torque may distort the sprinkler inlet and cause leakage or impairment of the sprinkler.

Do not attempt to compensate for insufficient adjustment in the escutcheon plate by under- or over-tightening the sprinkler. Readjust the position of the sprinkler fitting to suit.

**Series TY-B Upright and Pendent Sprinklers Installation**
The Series TY-B Upright and Pendent Sprinklers must be installed in accordance with the following instructions:

**Step 1.** Install pendent sprinklers in the pendent position. Install upright sprinklers in the upright position.

**Step 2.** With pipe thread sealant applied to the pipe threads, hand-tighten the sprinkler into the sprinkler fitting.

**Step 3.** Tighten the sprinkler into the sprinkler fitting using only the W-Type 6 Sprinkler Wrench, see Figure 7. For wax-coated sprinklers, use an 8 or 10 in. adjustable wrench. With reference to Figure 1 to 4, apply the W-Type 6 Recessed Sprinkler Wrench or an adjustable wrench, as applicable, to the sprinkler wrench flats.

**Wax Coated Sprinklers**
When installing wax-coated sprinklers with an adjustable wrench, take care to prevent damage to the wax coating on the sprinkler wrench flats or frame arms and, consequently, exposure of bare metal to the corrosive environment:

- Open the jaws of the wrench sufficiently wide to pass over the wrench flats without damaging the wax coating.
- Before wrench tightening the sprinkler, adjust the jaws of the wrench to contact only the sprinkler wrench flats.
- After wrench tightening the sprinkler, loosen the wrench jaws before removing the wrench.

**After Installation**
After installation, complete the following:

- Inspect the sprinkler wrench flats and frame arms and retouch (repair) the wax coating whenever the coating has been damaged and bare metal is exposed.
- Retouch the wax coating on the wrench flats by gently applying a heated 1/8 in. diameter steel rod to the damaged areas of wax, to smooth it back over areas where bare metal is exposed.

**NOTICE**

*Only retouching of the wax coating applied to the wrench flats and frame arms is permitted, and the retouching is to be performed only at the time of the initial sprinkler installation.*

*The steel rod should be heated only to the point it can begin to melt the wax, and appropriate precautions need to be taken when handling the heated rod in order to prevent the installer from being burned.*

**Series TY-B Recessed Pendent Sprinklers**
The Series TY-B Recessed Pendent Sprinklers must be installed in accordance with the following instructions:

**Step 1.** After installing the Style 10 or 40 Mounting Plate, as applicable, over the sprinkler threads and with pipe thread sealant applied to the pipe threads, hand-tighten the sprinkler into the sprinkler fitting.

**Step 2.** Tighten the sprinkler into the sprinkler fitting using only the W-Type 7 Recessed Sprinkler Wrench, see Figure 8. With reference to Figure 3 or 4, apply the W-Type 7 Recessed Sprinkler wrench to the sprinkler wrench flats.

**Step 3.** After the ceiling is installed or the finish coat is applied, slide on the Style 10 or 40 Closure over the Series TY-B Recessed Pendent Sprinkler and push the Closure over the Mounting Plate until its flange contacts the ceiling.

| K-Factor | Sprinkler Type | Temperature Rating | Bulb Liquid Color | Sprinkler Finish[4] | | | |
|---|---|---|---|---|---|---|---|
| | | | | Natural Brass | Chrome Plated | Polyester[c] | Wax Coated |
| 2.8 1/2 in. NPT | Upright (TY1151) and Pendent (TY1251) Figure 1 | 135°F (57°C) | Orange | 1, 2, 3 | | | N/A[d] |
| | | 155°F (68°C) | Red | | | | |
| | | 175°F (79°C) | Yellow | | | | |
| | | 200°F (93°C) | Green | | | | |
| | | 286°F (141°C) | Blue | | | | |
| | | 360°F (182°C) | Mauve | 1, 2 | | | |

**NOTES**

1. Listed by Underwriters Laboratories, Inc. (UL)
2. Listed by Underwriters Laboratories, Inc. for use in Canada (C-UL)
3. Approved by FM Global (FM Approvals)
4. Where Polyester Coated and Wax Coated Sprinklers are noted to be UL and C-UL Listed, the sprinklers are UL and C-UL Listed as Corrosion-Resistant Sprinklers; Where Wax Coated Sprinklers are noted to be FM Approved, the sprinklers are FM Approved as Corrosion-Resistant Sprinklers

a. Installed with Style 10 (1/2 in. NPT) or Style 40 (3/4 in. NPT) 3/4 in. Total Adjustment Recessed Escutcheon, as applicable
b. 150°F (66°C) maximum ceiling temperature
c. Frame and deflector only
d. Not Applicable (N/A)

***TABLE A***
***SERIES TY-B 2.8 K-FACTOR UPRIGHT AND PENDENT SPRINKLERS***
***LABORATORY LISTINGS AND APPROVALS***

| K-Factor | Sprinkler Type | Temperature Rating | Bulb Liquid Color | Sprinkler Finish[4] | | | |
|---|---|---|---|---|---|---|---|
| | | | | Natural Brass | Chrome Plated | Polyester[c] | Wax Coated |
| 5.6 1/2 in. NPT | Upright (TY3151) Figure 2 | 135°F (57°C) | Orange | 1, 2, 3 | N/A[d] | 1, 2, 3 | 1, 2, 3 |
| | | 155°F (68°C) | Red | | 1, 2, 3 | | |
| | | 175°F (79°C) | Yellow | | N/A[d] | | |
| | | 200°F (93°C) | Green | | 1, 2, 3 | | |
| | | 286°F (141°C) | Blue | | | | 1[b], 2[b], 3[b] |
| | | 360°F (182°C) | Mauve | | | | N/A[d] |
| | Pendent (TY3251) Figure 2 | 135°F (57°C) | Orange | 1, 2, 3 | | | 1, 2, 3 |
| | | 155°F (68°C) | Red | | | | |
| | | 175°F (79°C) | Yellow | | | | |
| | | 200°F (93°C) | Green | | | | |
| | | 286°F (141°C) | Blue | | | | 1[b], 2[b], 3[b] |
| | | 360°F (182°C) | Mauve | | | | N/A[d] |
| | Recessed Pendent (TY3251)[a] Figure 5 | 135°F (57°C) | Orange | 1, 2, 3 | | | N/A[d] |
| | | 155°F (68°C) | Red | | | | |
| | | 175°F (79°C) | Yellow | | | | |
| | | 200°F (93°C) | Green | | | | |
| | | 286°F (141°C) | Blue | 1, 2 | | | |

**NOTES**

1. Listed by Underwriters Laboratories, Inc. (UL)
2. Listed by Underwriters Laboratories, Inc. for use in Canada (C-UL)
3. Approved by FM Global (FM Approvals)
4. Where Polyester Coated and Wax Coated Sprinklers are noted to be UL and C-UL Listed, the sprinklers are UL and C-UL Listed as Corrosion-Resistant Sprinklers; Where Wax Coated Sprinklers are noted to be FM Approved, the sprinklers are FM Approved as Corrosion-Resistant Sprinklers

a. Installed with Style 10 (1/2 in. NPT) or Style 40 (3/4 in. NPT) 3/4 in. Total Adjustment Recessed Escutcheon, as applicable
b. 150°F (66°C) maximum ceiling temperature
c. Frame and deflector only
d. Not Applicable (N/A)

***TABLE B***
***SERIES TY-B 5.6 K-FACTOR UPRIGHT AND PENDENT SPRINKLERS***
***LABORATORY LISTINGS AND APPROVALS***

| K-Factor | Sprinkler Type | Temperature Rating | Bulb Liquid Color | Sprinkler Finish[7] | | | |
|---|---|---|---|---|---|---|---|
| | | | | Natural Brass | Chrome Plated | Polyester[c] | Wax Coated |
| 8.0 3/4 in. NPT | Upright (TY4151) Figure 3 | 135°F (57°C) | Orange | 1, 2, 3, 4, 5, 6 | | | 1, 2, 3, 8 |
| | | 155°F (68°C) | Red | | | | |
| | | 175°F (79°C) | Yellow | | | | |
| | | 200°F (93°C) | Green | | | | |
| | | 286°F (141°C) | Blue | | | | 1[b], 2[b], 3[b], 8[b] |
| | | 360°F (182°C) | Mauve | | | | N/A[d] |
| | Pendent (TY4251) Figure 3 | 135°F (57°C) | Orange | 1, 2, 3, 4, 5, 6 | | | 1, 2, 3, 8 |
| | | 155°F (68°C) | Red | | | | |
| | | 175°F (79°C) | Yellow | 1, 2, 4, 5, 6 | | | 1, 2, 8 |
| | | 200°F (93°C) | Green | 1, 2, 3, 4, 5, 6 | | | 1, 2, 3, 8 |
| | | 286°F (141°C) | Blue | | | | 1[b], 2[b], 3[b], 8[b] |
| | | 360°F (182°C) | Mauve | | | | N/A[d] |
| | Recessed Pendent (TY4251)[a] Figure 6 | 135°F (57°C) | Orange | 1, 2, 3, 4 | | | |
| | | 155°F (68°C) | Red | | | | |
| | | 175°F (79°C) | Yellow | 1, 2, 4 | | | |
| | | 200°F (93°C) | Green | 1, 2, 3, 4 | | | |
| | | 286°F (141°C) | Blue | 1, 2 | | | |
| 8.0 1/2 in. NPT | Upright (TY4851) ) Figure 4 | 135°F (57°C) | Orange | 1, 2, 3, 4, 5 | 1, 2, 3, 4, 5 | 1, 2, 3, 4, 5 | |
| | | 155°F (68°C) | Red | | | | |
| | | 175°F (79°C) | Yellow | | | | |
| | | 200°F (93°C) | Green | | | | |
| | | 286°F (141°C) | Blue | | | | |
| | | 360°F (182°C) | Mauve | | N/A[d] | | |
| | Pendent (TY4951) Figure 4 | 135°F (57°C) | Orange | 1, 2, 3, 4 | | | |
| | | 155°F (68°C) | Red | | | | |
| | | 175°F (79°C) | Yellow | | | | |
| | | 200°F (93°C) | Green | | | | |
| | | 286°F (141°C) | Blue | | | | |
| | | 360°F (182°C) | Mauve | | | | |

**NOTES**

1. Listed by Underwriters Laboratories, Inc. (UL)
2. Listed by Underwriters Laboratories, Inc. for use in Canada (C-UL)
3. Approved by FM Global (FM Approvals)
4. Approved by the Loss Prevention Certification Board (LPCB Ref. No. 007k/03)
5. VdS Approved. (For details, contact Johnson Controls, Enschede, Netherlands, Tel. 31-53-428-4444 / Fax 31-53-428-3377)
6. Approved by the Loss Prevention Certification Board (LPCB Ref. No. 094a/05)
7. Where Polyester Coated and Wax Coated Sprinklers are noted to be UL and C-UL Listed, the sprinklers are UL and C-UL Listed as Corrosion-Resistant Sprinklers; Where Wax Coated Sprinklers are noted to be FM Approved, the sprinklers are FM Approved as Corrosion-Resistant Sprinklers

a. Installed with Style 10 (1/2 in. NPT) or Style 40 (3/4 in. NPT) 3/4 in. Total Adjustment Recessed Escutcheon, as applicable
b. 150°F (66°C) maximum ceiling temperature
c. Frame and deflector only
d. Not Applicable (N/A)

***TABLE C***
***SERIES TY-B 8.0 K-FACTOR UPRIGHT AND PENDENT SPRINKLERS***
***LABORATORY LISTINGS AND APPROVALS***

| K-Factor | Type | Sprinkler Finish | | | |
|---|---|---|---|---|---|
| | | Natural Brass | Chrome Plated | Polyester[1] | Wax Coated |
| 2.8<br>1/2 in. NPT | **Upright (TY1151) and Pendent (TY1251)** | 175 psi (12,1 bar) | | | N/A[3] |
| 5.6<br>1/2 in. NPT | **Upright (TY3151) and Pendent (TY3251)** | 250 psi (17,2 bar)[2]<br>or<br>175 psi (12,1 bar) | | | |
| | **Recessed Pendent (TY3251)** | | | | |
| 8.0<br>3/4 in. NPT | **Upright (TY4151) and Pendent (TY4251)** | 175 psi (12,1 bar) | | | |
| | **Recessed Pendent (TY4251)** | 175 psi (12,1 bar) | | | N/A[3] |
| 8.0<br>1/2 in. NPT | **Upright (TY4851) and Pendent (TY4951)** | 175 psi (12,1 bar) | | | |

**NOTES**
1. Frame and deflector only
2. The maximum working pressure of 250 psi (17,2 bar) only applies to the Listing by Underwriters Laboratories, Inc. (UL) and the Listing by Underwriters Laboratories, Inc. for use in Canada (C-UL).
3. Not Applicable (N/A)

***TABLE D***
***SERIES TY-B UPRIGHT AND PENDENT SPRINKLERS***
***MAXIMUM WORKING PRESSURE***

P/N 57XXXXXXX

| | | SIN |
|---|---|---|
| 530 | 2.8K UPRIGHT (1/2 in. NPT) | TY1151 |
| 531 | 2.8K PENDENT (1/2 in. NPT) | TY1251 |
| 570 | 5.6K UPRIGHT (1/2 in. NPT) | TY3151 |
| 571 | 5.6K PENDENT (1/2 in. NPT) | TY3251 |
| 590 | 8.0K UPRIGHT (3/4 in. NPT) | TY4151 |
| 591 | 8.0K PENDENT (3/4 in. NPT) | TY4251[5] |
| 560 | 8.0K UPRIGHT (1/2 in. NPT) | TY4851 |
| 561 | 8.0K PENDENT (1/2 in. NPT) | TY4951 |

| | SPRINKLER FINISH |
|---|---|
| 1 | NATURAL BRASS |
| 3 | PURE WHITE (RAL9010)[1] POLYESTER |
| 4 | SIGNAL WHITE (RAL9003)[3] POLYESTER |
| 6 | WAX COATED 286°F (141°C) MAX |
| 9 | CHROME PLATED[4] |

| | TEMPERATURE RATING |
|---|---|
| 135 | 135°F (57°C) |
| 155 | 155°F (68°C) |
| 175 | 175°F (79°C) |
| 200 | 200°F (93°C) |
| 286 | 286°F (141°C) |
| 360 | 360°F (182°C) |
| 000 | OPEN[2] |

**NOTES**
1. Eastern Hemisphere sales only
2. Available only for 8.0 K-factor TY4151 and TY4251 for use in deluge systems ("OPEN" indicates sprinkler assembly without glass bulb, button, and sealing assembly)
3. Signal White (RAL9003) Polyester finish not available for TY3151 5.6K Upright 1/2 in. NPT sprinkler in 175°F (79°C) and 360°F (182°C) temperature ratings
4. Chrome Plated finish available for all sprinklers except TY3151 Upright and TY3251 Pendent 5.6K 1/2 in. NPT in 135°F (57°C), 175°F (79°C), 200°F (93°C), and 286°F (141°C) temperature ratings, and TY4851 Upright 8.0K 1/2 in. NPT 360°F (182°C) temperature rating
5. TY4251 in 175°F (79°C) temperature rating not FM Approved, see Table C for all applicable Listings and Approvals

***TABLE E***
***SERIES TY-B UPRIGHT AND PENDENT SPRINKLERS***
***PART NUMBER SELECTION***

# Care and Maintenance

The TYCO Series TY-B 2.8, 5.6, and 8.0 K-factor, Upright, Pendent, and Recessed Pendent Sprinklers must be maintained and serviced in accordance with this section.

Before closing a fire protection system main control valve for maintenance work on the fire protection system that it controls, obtain permission to shut down the affected fire protection system from the proper authorities and notify all personnel who may be affected by this action.

The owner must assure that the sprinklers are not used for hanging any objects and that the sprinklers are only cleaned by means of gently dusting with a feather duster; otherwise, non-operation in the event of a fire or inadvertent operation may result.

Absence of an escutcheon, which is used to cover a clearance, may delay the time to sprinkler operation in a fire situation.

Sprinklers which are found to be leaking or exhibiting visible signs of corrosion must be replaced.

Automatic sprinklers must never be painted, plated, coated, or otherwise altered after leaving the factory. Modified sprinklers must be replaced. Sprinklers that have been exposed to corrosive products of combustion, but have not operated, should be replaced if they cannot be completely cleaned by wiping the sprinkler with a cloth or by brushing it with a soft bristle brush.

Care must be exercised to avoid damage to the sprinklers before, during, and after installation. Sprinklers damaged by dropping, striking, wrench twist/slippage, or the like, must be replaced. Replace any sprinkler that has a cracked bulb or that has lost liquid from its bulb. See the Installation Section.

The owner is responsible for the inspection, testing, and maintenance of their fire protection system and devices in compliance with this document, as well as with the applicable standards of the National Fire Protection Association such as NFPA 25, in addition to the standards of any other authorities having jurisdiction. Contact the installing contractor or product manufacturer with any questions.

Automatic sprinkler are recommended to be inspected, tested, and maintained by a qualified Inspection Service in accordance with local requirements and/or national codes.

# Limited Warranty

For warranty terms and conditions, visit www.tyco-fire.com.

# Ordering Procedure

Contact your local distributor for availability. When placing an order, indicate the full product name and Part Number (P/N).

**Sprinkler Assemblies with NPT Thread Connections**
Specify: Series TY-B (specify SIN), (specify K-factor), (specify Upright or Pendent) Sprinkler with (specify) temperature rating, (specify) finish or coating, P/N (See Table E)

**Recessed Escutcheon**
Specify: Style (10 or 40) Recessed Escutcheon with (specify*) finish, P/N (specify*)

* Refer to Technical Data Sheet TFP770

**Sprinkler Wrenches**
Specify: W-Type 6 Sprinkler Wrench, P/N 560006387

Specify: W-Type 7 Sprinkler Wrench, P/N 568504001

**Wax Sticks (for retouching wrench-damaged wax coating)**
Specify: (specify color, below) Color-coded Wax Sticks for retouching (specify temperature rating) temperature-rated Series TY-B Sprinklers, P/N (specify):

Black for 135°F (57°C) . . . . . 560651135
Red for 155°F (68°C) . . . . . 560651155
Yellow for 175°F (79°C) . . . . . 560651175
Blue for 200°F (93°C)
and 286°F (141°C) . . . . . 560651286

***Note:*** *Each wax stick is suitable for retouching up to 25 sprinklers.*

*The wax used for 286°F (141°C) sprinklers is the same as for 200°F (93°C) sprinklers. Therefore, the 286°F (141°C) sprinkler is limited to the same maximum ceiling temperature as the 200°F (93°C) sprinkler which is 150°F (66°C).*

**1467 Elmwood Avenue, Cranston, RI 02910 | Telephone +1-401-781-8220**

**© 2026 Johnson Controls. All rights reserved. All specifications and other information shown were current as of document revision date and are subject to change without notice.**

NATIONAL FIRE PROTECTION ASSOCIATION and NFPA are registered trademarks of National Fire Protection Association;
TEFLON is a trademark of The Chemours Company FC, LLC

Johnson Controls