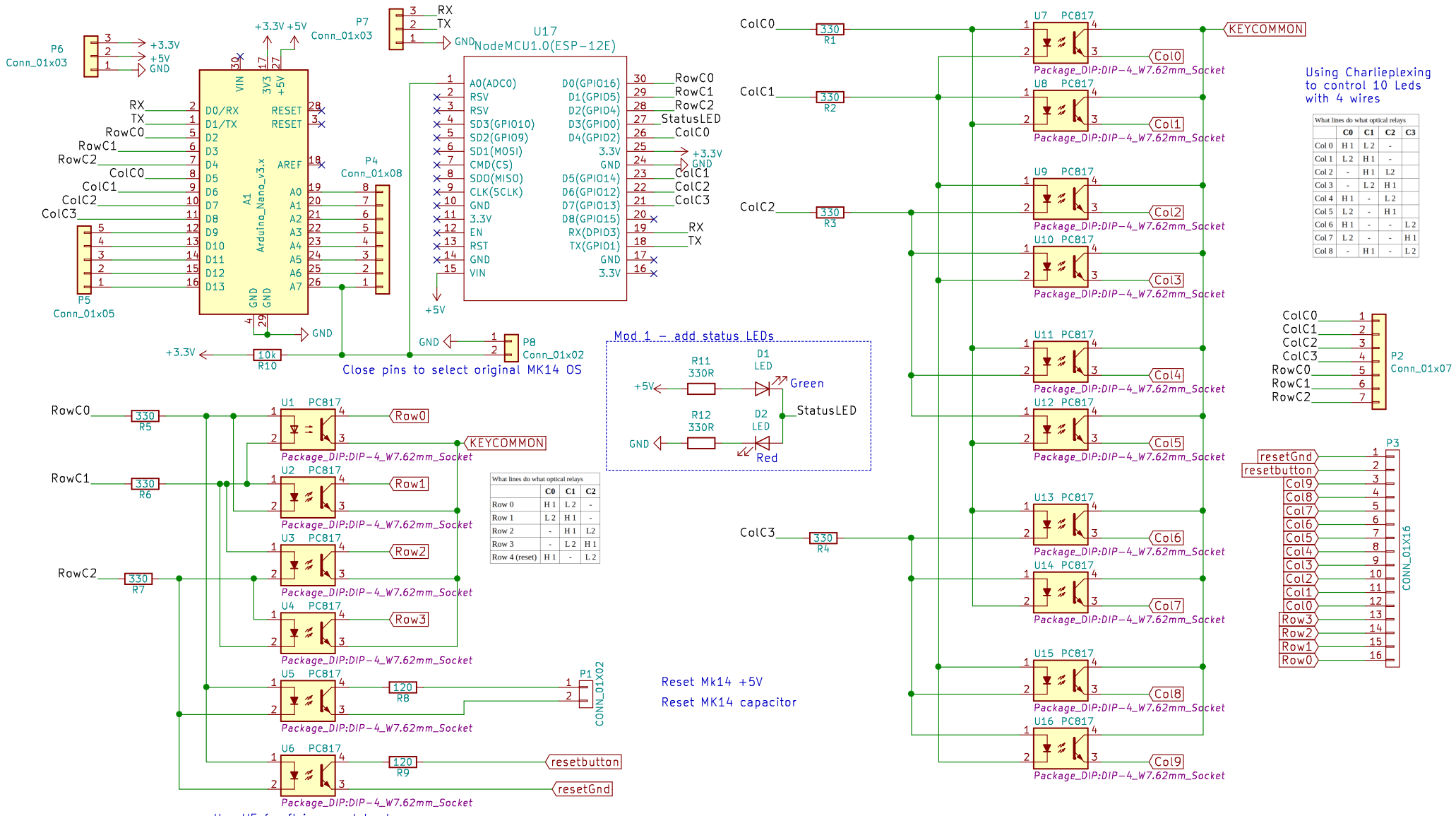

What lines do what optical relays

	C0	C1	C2	C3
Col 0	H 1	L 2	-	
Col 1	L 2	H 1	-	
Col 2	-	H 1	L2	
Col 3	-	L 2	H 1	
Col 4	H 1	-	L 2	
Col 5	L 2	-	H 1	
Col 6	H 1	-	-	L 2
Col 7	L 2	-	-	H 1
Col 8	-	H 1	-	L 2

What lines do what optical relays

	C0	C1	C2
Row 0	H 1	L 2	-
Row 1	L 2	H 1	-
Row 2	-	H 1	L2
Row 3	-	L 2	H 1
Row 4 (reset)	H 1	-	L 2

Author: David Allday
Licence: CC BY 4.0
https://creativecommons.org/licenses/by/4.0/
just the interace for arduino or ESP8266 module
Added mod to show status leds

Sheet: /
File: mk14keysCP.sch

Title: MK14keysCP

Size: A4	Date: 2021-11-14	**Rev: V2.1**
KiCad E.D.A. kicad 5.0.2+dfsg1-1bpo9+1		Id: 1/1