PARTS OF A LATHE

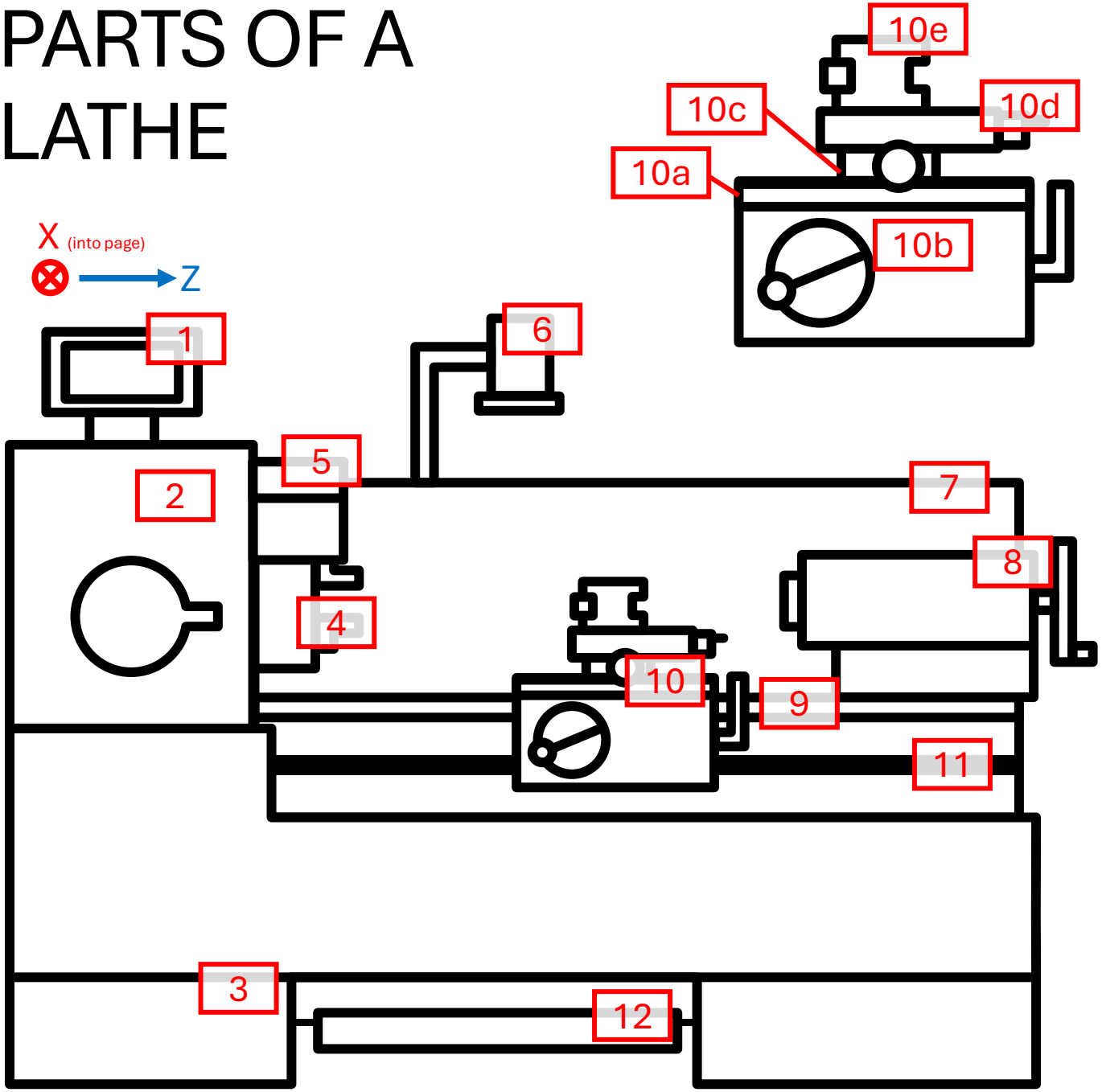

	Part	Function
1	Digital Readout (DRO)	Displays (x,z) position of tool, used for resetting tool position and accurate machining
2	Headstock	Houses motor, gearbox, spindle, and controls for spindle and lead screw rotation speed
3	Support	Raises and supports lathe
4	3-Jaw Chuck	Securely holds workpiece and rotates it (in either direction) as it is connected to spindle
5	Safety Guard	Prevents contact with rotating chuck, by preventing rotation of chuck when guard is lifted
6	Light	Provides illumination
7	Splash Guard	Prevents chips and coolant from spilling onto the floor
8	Tailstock	Moves along bed while maintaining center position, holds tools via barrel in tailstock that can be extended or retracted, position of tailstock/barrel can be locked
9	Bed	Base of lathe; mounted to headstock, allows tailstock to slide on it. Length determines workpiece size
10	Carriage	Moves between headstock & tailstock, holds components to move tool and control lever to start lathe. Can engage with lead screw
10a	Saddle	Top of carriage, slides along bed, supports cross slide
10b	Apron	Front of carriage; houses mechanism that engages with lead screw
10c	Cross Slide	Mounted on saddle, moves tool in x direction/perpendicularly via handle
10d	Compound Slide	Mounted on cross slide, can be swivelled & moved for tapers, facing depth of cut, or minor turning operations
10e	Toolpost	Holds tools to be used on work
11	Lead Screw	connected to spindle, allows carriage to be engaged to it along its length to move at fixed rate
12	Brake Pedal	Stops spindle, acts as emergency brake

TURNING OPERATIONS

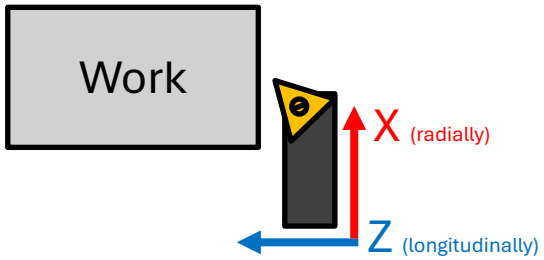

	External Operations					Internal Operations			
	Turning	Facing	Grooving	Parting	Threading	Drilling	Reaming	Boring	Tapping
Purpose	To reduce external diameter of work	To reduce length of work	To form grooves, a decrease in the diameter at a section in the middle of the work	To part, or cut off a section of the work	To form threads on the outer diameter of the work	To form holes in the work	To finish an existing hole	To enlarge an existing hole	To form internal screw threads in an existing hole
Feed Direction	Fed in Z direction	Fed in X direction	Fed in X direction		Fed in Z direction	Fed in Z direction			
Conditions needed	Nil	Usually same tool as turning is used, however specialised facing tools may be used.	Tool is fed in at slower rate		Done at low speeds and with high amounts of lubrication	Nil	Done at low speeds and with high amounts of lubrication	Existing hole must be bigger than boring tool	Done at low speeds and with high amounts of lubrication

LATHE MOTIONS, CUTTING METHODS & FORCES

TYPES OF MOTION

Workpiece Rotation

The work may be rotating clockwise/anti-clockwise depending on if the tool is left or right-handed.

Direction of rotation is determined from viewing the work from the chuck/headstock.
Tool type is dependent on where cutting edge is (left side → Right handed tool, right side → Left Handed Tool)

Hence,
Clockwise rotation (rolls towards you) → right-handed tool used
Anticlockwise rotation (rolls away from you) → left-handed tool used
If the wrong tool/rotation direction is used, the tool will not cut the work and will rub against/scratch it instead.

Feed Direction

Feeding the tool in the Z direction (left/right direction or longitudinally) does a turning operation; reducing the work diameter
Feeding the tool in the X direction (front back direction, or radially) does a facing operation; reducing the work length.

Depth of Cut

For Turning/Longitudinal Cuts, the tool is first moved along the X axis outside of the workpiece to determine the depth of cut.
For Facing/Radial Cuts, the tool is first moved along the Z axis outside the workpiece to determine the depth of cut.

After determining the depth of cut, the tool is then fed in to cut the work.
The depth of cut must not be too high, otherwise the tool will not be able to cut the work.

CUTTING OPERATIONS & FORCES

Orthogonal Cutting

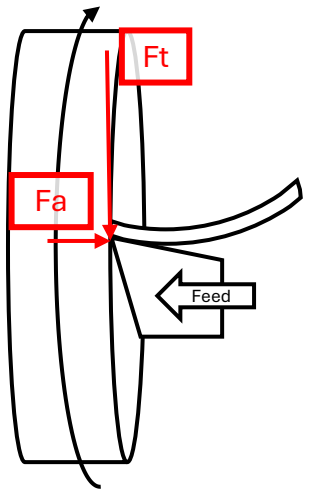

Has the cutting edge perpendicular to direction of motion.
Properties:
Chips coil into flat spirals on top of cutting edge → poorer chip flow & disposal → needs to be fed at slower rate
May cause work surface to be damaged & poor surface finish
Higher cutting force generated → depth of cut should be lowered

Uses:
Shoulder turning, Grooving, Parting

Forces during Orthogonal Cutting:
Tangential Force [Ft]:
Acts tangentially, opposes cutting action
Acts against resistive force of material during cutting; hence is large & consumes high power which may break the tool
Thus, a slower feedrate/lower depth of cut should be used.

Axial Force [Fa]:
acts along turning axis, opposes feed direction
Essentially a normal reaction force; hence is small & consumes little power.

Oblique Cutting

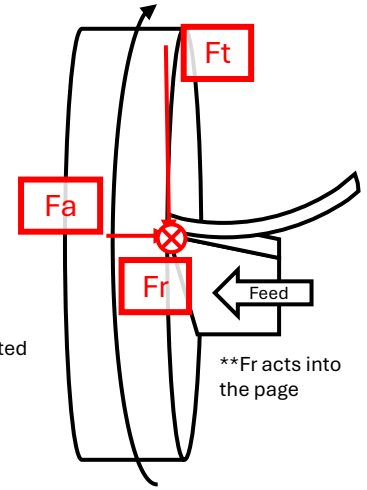

Has the cutting edge at a non 90deg angle to motion direction.
Properties:
Chips coil into spirals coils that can flow away due to tilted cutting face → better flow & disposal → can be fed at faster rate
Good surface finish
Lower cutting force needed → depth of cut can be increased

Uses:
Shoulder turning, Grooving, Parting
As the tool edge is angled, it can decompose the "normal force"/originally axial force into the axial and radial forces.

Forces during Oblique Cutting:
Tangential Force[Ft]:
Same as Orthogonal cutting, however is lesser than Oblique Cutting hence higher feedrate/higher depth of cut is permitted
Axial Force [Fa]:
Same as Orthogonal cutting
Radial Force [Fr]:
Opposes cross feed direction(perpendicular to feed direction); acts radially; hence pushes tool back but is resisted by cross slide
As it is a component of the axial force originally, it is also low and consumes little power.

LATHE CUTTING FACTORS & CHIPS

WORKPIECE MATERIAL

Depending on the desired part, different material with different properties (composition, manipulated mechanical properties like heat treated) may be used.
Hence requiring different tool types, cutting conditions, or machine power

MACHINE DESIGN & CONDITION

Different types of lathe machines (desktop lathe, industrial lathe) have different powers and hence different purposes
Machine condition is affected by whether it is used appropriately, and the repair frequency

CUTTING CONDITIONS

These three factors affect the cutting action effectiveness:

	Definition	Working Range	For Rough Cuts	For Finishing Cuts
Cutting Speed	How fast a point on the circumference of the work advances	Determined by tool type, work material, and work diameter	Decrease	Increase
Feedrate	How fast the tool is fed into the work	Determined by work material and tool type	Increase	Decrease
Depth of Cut	The depth of material removed during each cutting pass			

CUTTING FLUIDS

Cutting fluids or coolants, are made with mineral oil.

Neat Oils

100% mineral oil
Used for slower speed & higher lubrication operations (e.g. tapping)

Emulsions

Mixture of mineral oil and water (e.g. 1:20 ratio)
Used for faster speed operations & operations that generate high heat (as water has high heat capacity)

Cutting fluids are used for:
Cooling and lubrication (main purpose)
Improving surface finish & accuracy
Flushing away chips hence preventing chip welding
Prolongs tool life, preventing corrosion
Allows higher cutting speed and feedrate

TOOL MATERIAL & CHARACTERISTICS

A suitable tool material is picked by considering these factors:

Hot Hardness
Toughness
Abrasion Resistant
Price
Other mechanical properties (tensile strength, thermal conductivity, modulus of elasticity, etc)

Common tool materials, softest to hardest:

High Carbon/Carbon Tool Steel

Usually not used as too soft to cut other stronger materials

High Speed Steel (HSS)

for small production batches
have to be grinded to retain correct geometry
blanks can be bought and grinded down for specific needs

Cast Cobalt Alloys
Cemented Carbide
Ceramic (Cemented Oxide)
Diamond

Usually used in a dust form in grinding wheels

Throw Away Inserts

fastened onto an insert holder via screw/wedge clamp
Has grooves to break up chips, preventing nesting(when chips get caught in work

Reduces set up time as inserts can be quickly fastened
Inserts are indexable(reusable, by rotating it)
THUS, used for mass production + general purpose
**other materials like ceramic may be used too

Carbide Tipped Tools

fixed onto tool; with carbide tip brazed(attached) onto steel tool holder
provides hard cutting edge + is economical
hence useful for small to medium production batches.

TOOL GEOMETRY

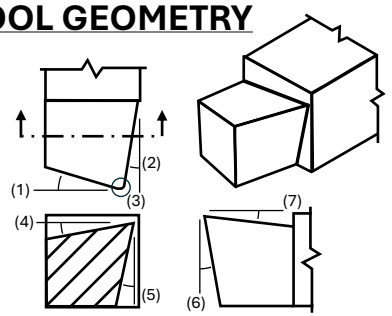

(7) & (4): Back & Side Rake Angle
Generally, Rake angle directs chip flow away from cut, provides sharp cutting edge
Back rake provides sharp cutting edge & directs chips away during turning
Side rake provides sharp cutting edge & directs chips away during facing and increases surface finish quality
(5) & (6): Side & Front Relief Angle
Generally, Relief angle prevents tool from rubbing on newly cut surface
Side relief prevents rubbing during turning and allows tool to be fed in
Front relief prevents rubbing during facing
(1) & (2): Front & Side Cutting Edge Angle
Front Cutting Edge Angle provides clearance/prevents rubbing between front edge and newly cut surface. (like front relief angle)
Side Cutting Edge Angle defines orthogonal/oblique cutting, and allows tool to be fed into work (allowing feed into work is similar to side relief)
(3): Nose Radius
Prevents tool tip from breaking; makes tool tip stronger, and increases surface finish
**Underlined portions are common purposes in each section of type of angle

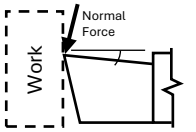

Positive Rake Angle

for single point cutting tools, positive rake angle means surface slopes back. Thus,

1) Normal force acts on unsupported tool tip
2) As rake angle increases, tool tip is more likely to break/becomes weaker (due to tool tip being "more unsupported")
3) Hence low cutting force and power is needed
4) However, this has better material flow, giving better surface finish, [a sharper edge, and longer tool life].

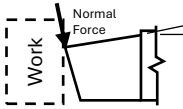

Negative Rake Angle

for single point cutting tools, negative rake angle means surface slopes in front. Thus,

1) Normal force acts on supported tool tip
2) As rake angle decreases, tool tip is less likely to break/becomes stronger (due to tool tip being "more supported")
3) Hence higher cutting force and power is permitted
4) However, this has poorer material flow, giving poorer surface finish, [although it still causes thin continuous chips].

Notice how the two are opposites of each other, excluding the square brackets.

CHIP TYPES

Generally, chips are formed due to compressive stresses, and can assess the suitability of the cutting methods

Discontinuous Chips

Formed when chips have not fully formed, causing them to be disjointed and segmented

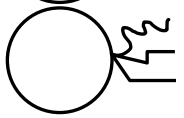

Continuous Chips

Forms and flows in a continuous manner, forming long and coiled chips

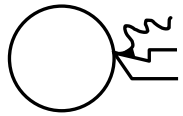

Continuous Chips with Built Up Edge

Formed similarly to continuous chips, however chips are pressure welded onto tool tip.

Different cutting factors affect the chip type:

Factor	Causes Discontinuous Chips	Causes Continuous Chips	Causes Continuous Chips with BUE
Work Material	Brittle (e.g. cast iron, leaded brass)	Ductile (e.g. mild steel, aluminium)	
Rake Angle	Low	High (makes chip flow better)	
Cutting Speed (Cutting conditions)	Low	High	Low
Feedrate (Cutting conditions)	High	Low	High
Depth of Cut (Cutting conditions)	High	Low	High
Cutting Fluid Usage	Poor usage of cutting fluid	Good use of cutting fluid	Low or incorrect cutting fluid used
Tool Properties	Nil	Tool has low pressure welding tendency	Nil

Notice how for cutting speed, feedrate and depth of cut, discontinuous chips and BUE chips are caused by the same cutting conditions to rough cuts (you can imagine the sharp discontinuous chips or the built up edge causing scratches and poor finish, hence why more suitable for rough cuts)

Likewise, continuous chips are caused by the same cutting conditions as finishing cuts (opposite)

LATHE WORK/TOOL HOLDERS

For Lathe Tools, the tool tip has to be aligned to the center. Otherwise, the dimensions will be inaccurate (in general for either below or above center)

	Below Center	Above Center
Effects	Dig into & scratches work, causing chatter & poor surface finish	Cutting is inaccurate, may be unable to cut workpiece

	Tool Holding Devices					Work Holding Devices						Work Supporting Devices			
	On Carriage			On Tailstock		Chucks		Mandrels				Centres		Steadies	
Part	Front Tool Post	4-Way Toolpost	Quick Change Toolpost	Drill Chuck	Sleeves	3 Jaw Chuck	4 Jaw Chuck	Plain Mandrel	Expansion Mandrel	Gang Mandrel	Cone Mandrel	Dead Center	Live Center	Travelling Steady	Fixed Steady
Description	Holds 1 tool at a time	Holds 4 tools at a time Tool can be picked by rotating post and locking it with turret lock	Holds 1 or 2 tools that can be swapped out from the toolpost. Center height can be calibrated via adjustment screw	Holds the drill bit for drilling operations. Drill chuck key is used to tighten chuck onto drill bit	May be used to hold reaming tools/drill bits if they are too small to be directly mounted onto tailstock	Chuck key turns socket, turns scroll, moves jaws in and out	Each jaw has its own chuck key socket to move jaw in and out independently	A shaft with one diameter across. Comes in different diameters	A shaft with a sleeve that can expand via sliding it onto the tapered end to fit the internal diameter of the work	A shaft with one diameter across, with a nut at the end to secure the multiple workpieces together	A shaft with a fixed and movable cone to secure the multiple workpieces together	Mounted on tailstock, supports free end of long workpieces Sleeves may be needed to hold center onto tailstock.		Mounted on carriage, supports middle of long work and can slide across its length. Has 2 support points opposite tool that may be greased or have rollers added to reduce friction.	Bolted onto bed, supports end of work. Has 3 spaced out supports that may be greased or have rollers to reduce friction. Steady can be opened for easy installation of work
Advantages	Useful for low batch production	Useful for medium batch production	Center height only needs to be calibrated once Tools can be quickly and easily swapped out	Nil	Nil	Automatically centres work. Jaws can be reversed for large diameter work	Stronger clamping force as each jaw has its own chuck socket	In general, for mandrels: they are useful for machining the outer diameter of a hollow cylindrical work. Usually are hardened and have good surface finish to prevent workpiece damage.				More economical	Grease isn't needed as bearings in center reduce friction during machining & reduce heat and pressure.	Nil	Nil
Disadvantages	Packing with shims is required for tool to reach center height		More costly, as each tool requires its own tool holder			Clamping force is weaker as force is split between 3 jaws	More set up with dial gauges is required to ensure work is centred	Nil				High friction is generated at center tip; grease may be added to reduce friction	Less economical		
Usage	For low batch production uses	For medium batch production uses	For high batch production	For drilling operations	For other internal turning operations	For holding circular, triangular and hexagonal work	Can hold any shape of work, however best suited for holding irregular or off-centre work,	For machining one work with a specific hole size	For machining workpieces with slight variations in internal diameter	For machining multiple workpieces of the same internal diameter at the same time	For machining multiple workpieces of different internal diameter at the same time or when there is ANY variation in internal diameter	For general purpose/ heavy load/ low speed usage	For high speed and high precision usage	For machining along the whole length of the workpiece	For supporting the middle and machining the end of a long workpiece

PARTS OF A MILLING MACHINE

HORIZONTAL MILLING MACHINE

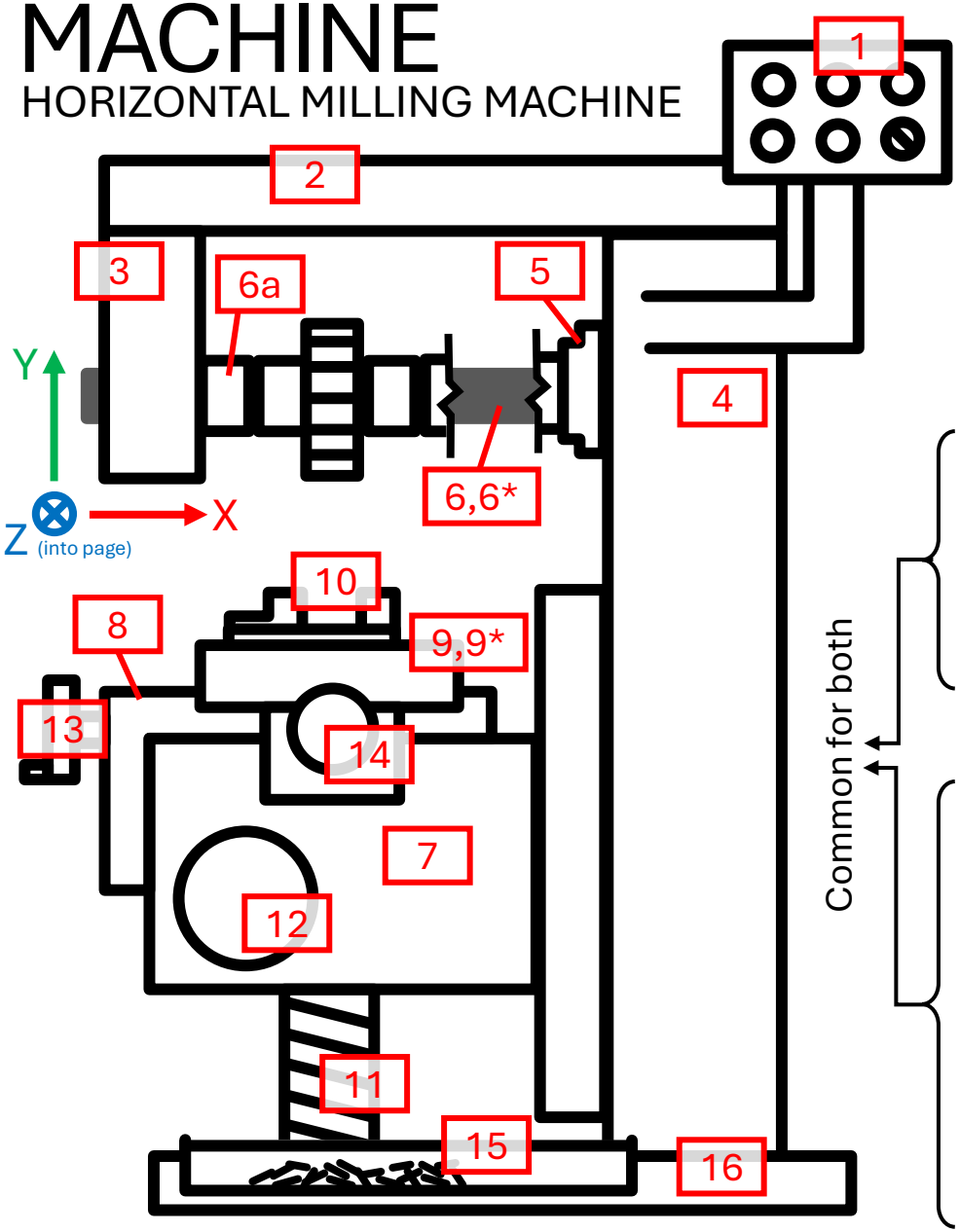

	Part	Function
1	Control Panel	Controls spindle speed & other functions
2	Overarm	Supports the free end of the arbor, can be extended/retracted depending on arbor size
3	Arbor Support	Also supports the free end of the arbor
4	Column	Back of machine; holds circuitry, motor, spindle, and spindle bearings
5	Spindle	Connected to motor, allows arbor/stub arbor to be connected to it
6	Arbor	Allows tools and spacers to be mounted on it; connected to spindle via draw bolt/drawbar clamp in spindle
6a	Spacers	Positions and locks cutting tool along arbor
6*	Stub Arbor	(Not pictured) A short arbor; need not be supported on the free end as tool is placed on free end of stub
7	Knee	Mounted on vertical guideways on column, encloses screw jack for raising itself (Y axis). Carries saddle, table, and other accessories
8	Saddle	Mounted on horizontal guideways on knee, for it to move in front/back direction (X axis), via a lead screw inside it.
9	Table	Mounted on horizontal guideways on saddle, for it to move in left/right direction (Z axis), via a lead screw inside it
9*	Swivelled Table	(Not pictured) ONLY for universal horizontal milling machines: Table can be swivelled/rotated up to 45deg for angled cuts
10	Vice	Securely holds workpiece in place
11	Screw Jack	Allows knee to move vertically when rotated (Y axis)
12	Vertical Traverse Motor	Turns screw jack to move the knee vertically (Y axis). Hand crank may used instead of motor
13	Cross Traverse Handle	Turns lead screw in saddle to move saddle in front/back direction (X axis)
14	Feed Handle	Turns lead screw in table to move table in left/right direction (Z axis)
15	Chip Pan	Collects falling chips & coolant
16	Base	Supports machine; some may be able to filter chips and reuse coolant

Common for both

PARTS OF A MILLING MACHINE

VERTICAL MILLING MACHINE

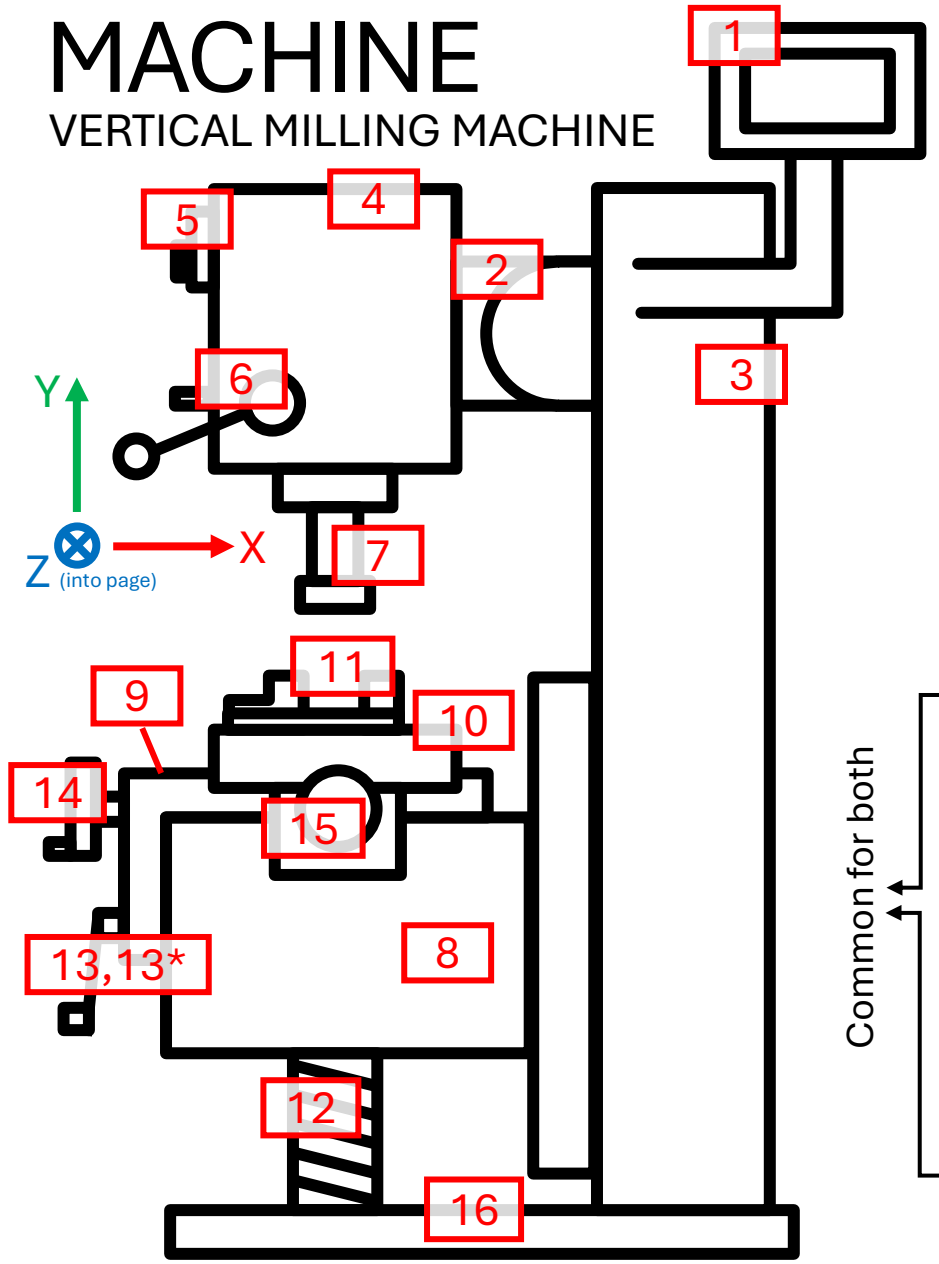

	Part	Function
1	Digital Readout (DRO)	Displays (x,y,z) position of work, for accurate machining or resetting tool position
2	Overarm/Ram	Holds spindle head & motor. Can be extended, retracted, and swivelled horizontally.
3	Column	Back of machine; holds circuitry, supports overarm
4	Spindle Head	Holds motor, gearbox, spindle, drawbar, draw clamp, quill and bearings; motor powers spindle → gearbox manages spindle speed & torque. **can also be swivelled with overarm for angled cuts
5	Motor Switch	Switches on motor and controls spindle direction
6	Quill Feed	Moves spindle vertically; used for drilling. May be fed vertically via handle or handwheel for finer movements
7	Collet Chuck	Holds tools, via a spring collet, connected to the collet chuck, connected to the spindle (via drawbar clamp/draw bolt in spindle), allowing it to rotate with spindle
8	Knee	Mounted on vertical guideways on column, encloses screw jack for raising itself (Y axis). Carries saddle, table, and other accessories
9	Saddle	Mounted on horizontal guideways on knee, for it to move in front/back direction (X axis), via a lead screw inside it.
10	Table	Mounted on horizontal guideways on saddle, for it to move in left/right direction (Z axis), via a lead screw inside it
11	Vice	Securely holds workpiece in place
12	Screw Jack	Allows knee to move vertically when rotated (Y axis)
13	Vertical Traverse Hand Crank	Turns screw jack which moves knee vertically (Y axis)
13*	Vertical Traverse Hand Wheel	(Not pictured) Used on other types of vertical milling machines, it moves the MOTOR AND SPINDLE vertically (Y axis) when turned
14	Cross Traverse Handle	Turns lead screw in saddle to move saddle in front/back direction (X axis)
15	Feed Handle	Turns lead screw in table to move table in left/right direction (Z axis). May have motor to drive motion instead
16	Base	Supports machine. May be able to filter out chips and reuse coolant

Common for both

MILLING TOOLS, OPERATIONS & METHODS

CUTTING TOOLS

Solid Cutters	Insert Cutters
Cutting edges are part of body Has longer cutting edges, allows deeper cuts Usually HSS is used & may be coated with alloy, or have carbide used instead for higher quality cutters	Cutting edges are from indexes, held onto index holders on tool Cutting length depends on number of inserts Recall than inserts are indexable, and usually made with tungsten carbide

	Horizontal Milling Tools			Vertical Milling Tools		
	Name	Description	Use	Name	Description	Use
General	Side & Face Staggered Cutter	Teeth staggered left & right, to cut smaller area, reducing cutting forces	For machining vertical & horizontal surfaces simultaneously, e.g. slots/stepped surfaces	End Mill	Has cutting teeth on sides and bottom, cutting edges may extend to center	For milling flat/stepped surfaces, open ended slots, keyways, or plunge milling (if cutting edges extend to center)
Rounded	Convex/ Concave Cutter	Has convex/concave blades	Convex blades → internal radii Concave → external radii	Ball Nosed Ended Mill	Has a rounded/ball shaped end	For milling cavities, and concave surfaces
Facing	Plain/Slab Mill	Has helical blades in LH or RH direction, with diff. helical angles for diff. materials	For milling large flat surfaces on outside diameter	Face Mill	Has cutting edges on outside edges and primarily on face.	For milling large flat surfaces
				Fly Cutter	Has a single point cutting tool offset from axis of rotation, which can be adjusted	For milling large flat surfaces (being more economical but less efficient)
Angled	Angle Cutter	Has tapered off cutting edges on one side/both sides. LH/RH Helical blades may be used	For chamfering or forming dovetails	Dovetail Cutter	Has a flared /dovetail shaped end	For milling out internal/external dovetail forms
Slots	Slitting Saw	A thin saw with straight/staggered flutes	For cutting narrow slots, parting or cutting recessing	T slot cutter	Has an upside-down T shape; with cutting tool on horizontal portion of T	For milling T slots, from existing vertically slots
	Slot Cutter	Only has teeth on circumference/periphery	For milling slots & keyways			

CUTTING OPERATIONS

Process	Slot Milling	Plain Milling	Saw Milling	Straddle Milling	Gang Milling
Use	Creates slots/keyways Side & face staggered cutter used	Mills large area on top of work Plain mill used	Mills out narrow slots/slits Slitting Saw used	Creates 2 parallel surfaces of equal depth 2 equal side and face cutters spaced out with spacers are used	Creates combination of different formed surfaces with multiple tools in one feed, done on one or multiple works. LH and RH cutters must both be used to cancel axial forces

Tool	With End Mill					Other Tools							
Process	**Contouring/ Side Milling**	Facing	**Slot Milling**	**Plunge Milling**	**Ramping**	Facing	**Chamfering**	Boring	Drilling	**Counter-sinking**	**Counter-boring**	Tapping	Reaming
Use	Sizes work/cre-ates desired shape on work	Removes material from top surface of work	Creates slots in workpiece	Removes material from work by directly lowering it into work.	Removes material by feeding downwards and sideways to form a ramp to feed into work	Removes material from top surface of work, Uses Face Mill instead	Removes material from edges to create angled surfaces. Chamfering tool Is used	Enlarges existing hole via boring tool	Creates a hole via drill bit	Creates countersunk hole from existing hole via countersinking tool	Creates counterbore hole from existing hole via counterboring tool	Creates internal screw threads from existing hole via tapping tool	Finishes existing hole via reaming tool

**bolded ones are new operations than lathe

CUTTING METHODS

Peripheral Milling

Sides of tool are used for machining work (i.e. surface is parallel to rotation axis)
Cutting force is not uniform, causing vibrations
Surface has wave like finish.

Face Milling

Sides & end are used for machining (i.e. surface is perpendicular to rotation axis)
Tool sides remove most of material, while tool end does finishing
Has circular marks on surface finish.

Up Cut/Conventional Milling

When work is fed against direction of tool

Advantages:
Backlash error is negated/removed

Disadvantages:
High feed power needed as work is pushed away
Chip welding more likely as chips grow in thickness during cut & high cutting temperatures (due to thicker end of chip) [recall what causes chip welding]
Chips are deposited onto newly cut surface → chips rub on/scratch newly cut surfaces → hence poor surface finish
Cutter wears faster as it initially rubs on work
Work tends to be lifted up

Hence used on older milling machines

Down Cut/Climb Milling

When work is fed along direction of tool

Advantages:
Lower feed power need as work is pushed along with tool
Cutter can be well lubricated or have coolant applied
Chip welding less likely as chips shrink in thickness during cut + lower cutting temperatures (due to coolant & thin end of chip) [recall what causes chip welding]
Chips are deposited away from newly cut surface → better surface finish
Work is pushed down; improves clamping

Disadvantages:
Backlash causes error

Hence used on newer milling machines

Notice how the two are opposites, e.g. advantages of up cut is the disadvantages of down cut

MILLING CUTTING FACTORS

WORKPIECE MATERIAL
MACHINE DESIGN
CUTTING FLUIDS
TOOL MATERIAL & CHARACTERISTICS

All the same from Lathe theory

CUTTING CONDITIONS

As the work is fed into a rotating tool instead, some aspects of cutting conditions are slightly different.

	Definition	Working Range	For Rough Cuts	For Finishing Cuts
Cutting Speed	How fast a point on the circumference of the **TOOL** advances	Determined by tool type, work material, and work diameter	Decrease	Increase
Feedrate	How fast the **WORK** is fed into the **TOOL**	Determined by work material and tool type	Increase	Decrease
Depth of Cut	The depth of material removed during each cutting pass	Determined by work material, tool type **and cutting length used**		

TOOL GEOMETRY

Milling tools have 2 cutting angles instead; Radial Rake Angle, and Axial Rake Angle. The Axial Rake angle can be split into positive and negative rake angle, which has the same properties and single point cutting tools.

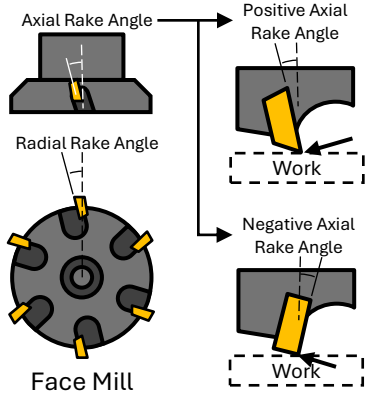

Similarly, positive axial rake angle refers to the insert "sloping back" as shown, hence having all the same properties, being:

1) Normal force acts on unsupported tool tip
2) As rake angle increases, tool tip is more likely to break/becomes weaker (due to tool tip being "more unsupported")
3) Hence low cutting force and power is needed
4) However, this has better material flow, giving better surface finish, [a sharper edge, longer tool life].

Likewise, negative axial rake angle refers to the insert "sloping forward" as shown, hence having all the same properties, being:

1) Normal force acts on supported tool tip
2) As rake angle decreases, tool tip is less likely to break/becomes stronger (due to tool tip being "more supported")
3) Hence higher cutting force and power is permitted
4) However, this has poorer material flow, giving poorer surface finish, but [producing thin continuous chips].

NUMBER OF CUTTING TEETH

The number of cutting teeth will affect how fast the work can be fed into the tool.
As each teeth will cut through a certain amount of material,
Increasing the number of cutting teeth cuts through material more frequently with each revolution of tool.
Hence work can be fed into tool as material is cut more frequently.
Thus, **more cutting teeth → allows higher feedrate**

Face Mill

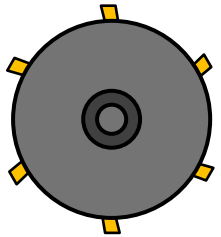

Has more cutting teeth
→ Thus can have work fed into tool at faster rate

Fly Cutter

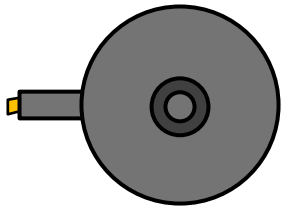

Has only one single pointed cutting tool → only 1 "cutting teeth" → Slower feedrate must be used

DIRECTION OF CUT

Depends on direction of tool rotation & direction of work at the tool
If the direction of tool rotation is the same direction as the direction of work at the tool, it undergoes down cut.
While if the two directions are against each other, it undergoes up cut.
Thus, whether the work undergoes up/down cut affects factors said earlier (surface finish, feed power needed, etc.)

Tool and work direction are opposite each other → upcut

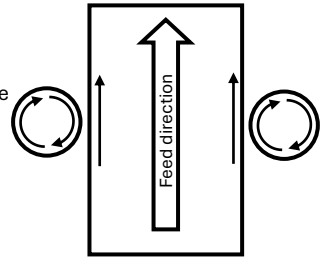

Tool and work direction are along with each other → down cut

** Note that there are some cases where up and down cut happen at the same time, e.g. when the work is being fed out to form a slot.

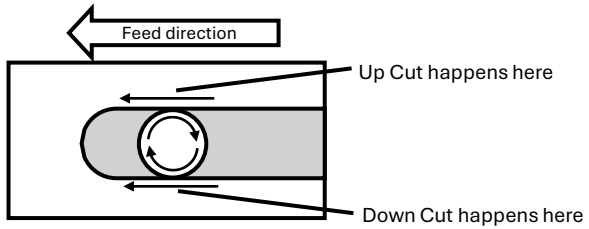

MILLING WORK/TOOL HOLDERS

	Tool Holding Devices		Work Holding Devices									
					Vices			Clamps, Set Block, Tee Bolts & Nuts				
Part	Spring Collet & Collet Chuck	Arbor/Stub Arbor	Angle Plate	Vee Block	Plain Vice	Swivel Vice	Universal Vice	U Clamp	Goose Neck Clamp	Jigs	Fixtures	Parallel Bars
Description	Spring collet is placed in collet chuck and holds onto shank of tool; which is then tightened and compressed with collet nut (via a C spanner)	A shaft connected to the motor spindle, to hold cutting tool and spacers. Free end is supported by arbor support; however stub arbors do not require support on the free end.	Has two plates perpendicular to each other, with slots to allow it to be bolted onto table/ for clamps to be bolted to perpendicular side	Has a V shaped profile to hold onto cylindrical components. Comes in different sizes for differently sized components.	Has a fixed jaw, movable jaw, and a crank handle to move the movable jaw Cutting forces should be directed to the fixed jaw to prevent vibrations and the vice from loosening	Same as plain vice, however has a swivel base, adding an extra machining axis	Same as swivel Vice, however can tilt, adding another machining axis.	Has a U shaped form to allow the Tee Bolt & Nut to screw onto it, while allowing it to be removed without unscrewing the nut. Used in conjunction with a set block, where one end of the clamp is supported by the set block, while the other clamps the work.	Has a lower profile than other clamps. Again, used in conjunction with Tee bolts & nuts, and a set block.	A custom-made part to hold specific work(s), to secure/release them effectively, and can be reused many times for repetitive work Clamped onto table via bolts or clamps A jig can guide the tool AND hold the work into the correct position.	A custom made part for holding specific work(s), however fixtures ONLY locate and hold work in correct position	Two long pieces of metal used with a vice, that raise the work above the vice, and
Usage	For holding vertical milling tools	For holding horizontal & universal horizontal milling tools	For setting workpiece perpendicular to table	For holding cylindrical components to mill keyways, slots and flat surfaces. Also prevents bending under machining pressure and damages from clamping pressure	For holding parallel workpieces/regular flat surfaces Fixed jaw may be used as datum for DRO to give accurate readings.	For holding parallel workpieces/regular flat surfaces Extra machining axes allows machining of differently angled/ compound angle surfaces		For quick removal & clamping	For improving clamp rigidity by lowering clamping distance.	For increasing production speed in mass production		For preventing tool from cutting into vice & clamping workpiece parallel to vice.
Proper Usage								Proper Clamping To ensure clamps are used properly: Bolt should be close to work to maximise clamping force Clamp should be horizontal so that clamping force is fully downwards, and that no horizontal forces push the work away Clamping area should be large and as close to center as possible, to prevent moments and lifting of work Use shims to protect workpiece, if needed.				Proper Usage: Work should be clamped in middle of vice Work must always be supported by parallel bars if needed, or else it may swivel out of place However, if not needed, they should not be used as they reduce clamping area.

MECHANICAL COMPONENTS

Mechanical components do any of the 4:
Transfer energy, reduce energy loss,
transmits/alter motion, holds parts together

FASTENERS

Fasteners secure 2 or more parts together. There are 2 main types of fasteners, Bolts & Nuts, and Screws
Bolts & Nuts are used in high stress applications and need to have a pre-existing hole. The nut is then fastened on the other end of the bolt to hold the parts together.

Screws have different properties, like length, material ,thread type, pitch (distance between threads), diameter, shape of head & slot type.
Screw head type determines tool used and how it protrudes from material (e.g. flat, oval ,socket cap)
Slot type also determines what tool can be used, with the wrong tool usage possibly damaging the screw (e.g. slotted/flat, Phillips/cross, hexagon)

There are 3 major types of screws:

	Use	Properties	Form	Material
Wood Screws	For fastening wood	Self-tapping, pre-existing hole not needed	Sharp tip to form hole, wide pitch for self-tapping	Zinc plated steel/stainless steel
Screws for Plastic	For fastening plastic	Self-tapping, pre-existing hole needed	Flat tip as hole is already formed, wide pitch for self-tapping	Steel/stainless steel coated with zinc oxide/black oxide
Machine Screws	For fastening metal	Not self-tapping, pre-existing tapped hole needed	Flat tip as hole is already formed, narrow pitch as hole is already tapped	Steel/stainless steel

BEARINGS & SLIDES

	Linear Bearings		Rotational Bearings	
	Circular Slide	Linear Motion Guides	Axial Bearings	Radial Bearings
Usage	Manages forces and moments in multiple directions, allows parts to slide along circular guide rods	Manages forces and moments in multiple directions, allows parts to slide along guide rods	Reduces friction on rotating components, manages forces in axial direction	Reduces friction on rotating components, manages forces in radial direction
Form	Cylindrical in shape to fit along circular guide rods	Has a slot to allow itself to slide along guide rods	Has independent surfaces on top and bottom to manage axial load & for ball bearings to slide along	Has independent surfaces on interior & exterior to manage radial load & for ball bearings to slide along
Advantages	Economical	High Accuracy Long Lasting	Nil	
Disadvantages	Not very accurate	Expensive		

SPRINGS

Stores energy from movement by deforming it in elastic region
Designed to operate in one direction, otherwise it will damage and plastically deform spring.

Spring Type	Compression	Tension	Torsion	Flat Coil	Leaf Spring
Form	A helical coil of wire	A helical coil of wire with hooks at the ends	A helical coil of wire extended at the ends tangentially	A flat tight coil of spring steel	Multiple stacked layers of pre bent metal strips
Usage	Stores energy under compressive forces	Stores energy under tensional forces	Stores energy under twisting/torsional forces	Stores energy when coiled/uncoiled, which may be from torsion forces	Stores energy under compression, replacing compression springs when height is limited.
Application	Pens, train carriages	trampolines	Clips, mousetraps	Measuring tapes, watches	automobiles

CAMS & FOLLOWERS

Transmits a linear motion from continuous rotation (radial cams) or reciprocating linear motion (wedge cams).
Wedge cams are the only type of cam that transmits motion from reciprocating linear motion.
However, there are 3 types of radial cams:

Cam Type	Pear	Snail	Eccentric
Form	Has a gentle increase in radius at one section of cam	Gradually increases in radius before suddenly dropping to original radius	Has a circular profile but rotated off from the center.
Output Motion	Gently increases to a large displacement for a short period, before gently decreasing to a low displacement for a low period	Gently increases with time until it suddenly drops & abruptly changes displacement	Moves in a sinusoidal motion (sine wave like); varies with time.

There are also different types of followers, with different possible follower ends.

Type	Slider Followers	Lever Followers
Form	Motion is transmitted by a sliding bar	Motion is transmitted by a pivoting bar.
Usage	When motion needs to be transmitted directly above cam	When motion needs to transmitted offset to cam.

Cam Type	Knife	Flat	Roller
Form	Has a thin edge to follow cam	Has a flat surface to follow cam	Has a roller at the end to follow cam
Cam Complexity	Works with high complexity	Works with low complexity	Works with low complexity
Cam Speed	Works with low speed	Works with low speed	Works with high Speed

GEARS

Transmits motion & power by changing speed & torque. As gear ratio increases, torque increases & speed decreases. Note that between every gear, rotation direction alternates.

Gear Type	Spur Gears	Bevel Gears	Rack & Pinion	Worm & Worm Wheel
Usage	For transmitting motion between 2 parallel shafts Has straight teeth which are economical & used for low power application	For transmitting motion between 2 perpendicular shafts Has straight teeth which are economical & used for low power application	For converting linear to rotation motion, or vice versa Has straight teeth which are economical & used for low power application	For obtaining a high gear ratio Self-locking; doesn't allow motion to be transmitted from wheel to worm, useful for preventing unwanted motion when motor is not running
With Helical Teeth	Helical teeth may be used for high power applications, and to reduce noise & vibrations (as teeth will gradually contact with one another)			Nil

BELTS & PULLEYS

Transmits motion & power by changing speed & torque similarly to gears; hence has similar properties like speed and torque changing. Generally, belts do not change rotation direction
Shown are the types of belts & the ways to assemble them:

Type	Round Belt	Flat Belts	Vee Belts	Timing Belts	Conveyor Belts
Form	Has circular cross section and pulley has raised sides to keep belt centres	Has flat cross section and wide pulley to have high contact surface area, preventing slipping	Has trapezium cross section & pulley has trapezium profile to have high contact surface area and keep belt in pulley.	Has regular notches along belt underside that mesh with notches on pulley, removing slippage & accurate motion transmission	Similar form to flat belts
Usage	Transmits motion between parallel/ perpendicular shafts For low torque applications	Transmits motion between parallel shafts For high speed low torque applications	Transmits motion between parallel shafts For high speed high torque applications Multiple belts may be used at the same time for reliability & safety	Transmits motion between parallel shafts For high speed high accuracy applications	Transmits motion between parallel shafts For high speed applications to transport items.

Type	Open	Turned	Closed	Serpentine
Form	Belt is wrapped around both pulleys in the "standard" way of assembling. Idler pulleys may be used to keep it taut	Like open assembly, however one of the pulleys is tilted perpendicularly.	Belt crosses over itself between pulleys to reverse motion direction. Belt crosses itself → rubbing causes damage over time	Has 4 pulleys set up to reverse motion direction without belt rubbing against itself. Longer lasting but more expensive.
Belt Used	Round, Flat, Vee, Timing	Round		
Use	For transferring motion in the same direction between 2 parallel shafts	For transferring motion in the same direction between 2 perpendicular shafts	For transferring motion in opposite directions between 2 parallel shafts	

MECHANISMS

Mechanisms are assemblies that have mechanical advantage; where a higher output force is generated from a smaller input force, by moving over a longer distance

CRANKS & BELL CRANKS

A Crank is a flat piece connected at the end of shaft to convert a large circular motion into rotation on the shaft.
Used in hand cranks, bike pedals

A Bell Crank is a L-shaped crank that transmits & redirects motion and force, and can have its arms extended to obtain mechanical advantage.
Used in race car suspensions & window locking switches

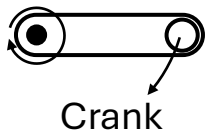

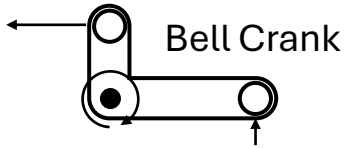

RATCHET & PAWL

A ratchet & pawl system allows one way rotation of the ratchet, where the pawl is able to pivot and block the teeth of the ratchet from rotating in the other direction.

Used in safety winches, pulleys & rope, bicycle hubs

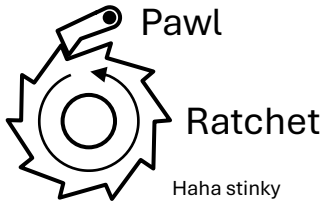

LINKAGES

Linkages are systems of bars that are free to rotate about pivots, and are connected to each other to rotate with each other to transmit and alter the output force/motion

PARALLEL LINKAGES

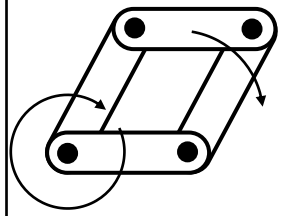

Keeps one linkage parallel & at a fixed distance from the joint, useful when an object needs to move while staying upright.
Use for toolbox compartments

TOGGLE LINKAGES

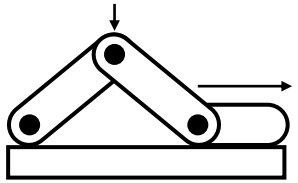

To overcome a large resistance by generating a large output force from a small input force over a long distance.
Used in toggle latches & toolbox latches.

REVERSE LINKAGES

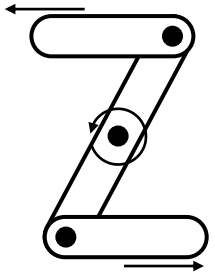

Uses one actuator/ motor to move 2 objects with the same force in opposite directions
Used in scissors lifts.

PUSH PULL LINKAGES

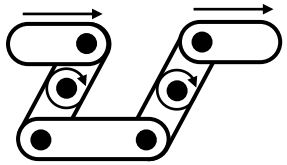

Creates same force and motion as input, useful for when motion needs to be diverted to different location but kept the same.
Used in RC helicopters

ROTARY LINKAGES

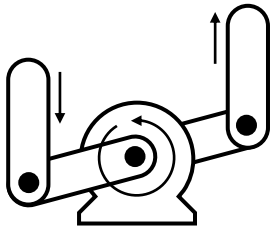

To convert linear motion to rotational motion, or vice versa (shown is linear → rotational → linear), for when a motor needs to move something linearly.
Used in pistons

HAND TOOLS

	Measuring Tools				Marking Tools			Clamping & Securing Tools							
Tool	Vernier Callipers	Engineering Square	Height Gauge	Protractor	Centre & Dot Punch	Scriber	Spring Divider	Table Vice	F & G Clamps	Combination & Long Nose Pliers	Angle Plates	Vee Blocks	Screwdrivers	Allen/Hexagonal/ Hex Keys	Locking Pliers/Mole Grips/Vice Grips
Parts	Has external jaws, internal jaws, depth blade, and sliding edge. Has different precisions (+- 0.01, 0.02, 0.05)	Has 2 blocks made to be perpendicular to each other	Has base, beam, vernier slide & scriber, and a fine adjustment screw for accurate measurements .	Has an edge that can swivel, connected to a protractor	Centre punch has 90deg tip (more pointed to punch deeper indentation) while dot punch has 60 deg tip w/ smaller and sharper tip.	Has two long and sharp pointed ends.	Similar look to a compass; has 2 sharp ends that can pivot from each other.	Has a fixed and movable jaw, controlled with a handle. May have a swivel base & anvil (hard flat surface for hammering work)	F clamps have wider jaw openings & can quickly slide open while G clamps have a long screw and are more versatile.	Combination pliers have flat gripping surfaces, circular gripping surfaces & cutting blades, while long nose pilers have gripping surfaces and cutting blades with long jaws.	Has two plates perpendicular to each other, with slots for bolts and clamps	Has a V shaped profile to hold onto cylindrical components.	Has a hardened steel tip that matches the shape of the screw slot. (e.g. Phillips head screwdriver, flathead screwdriver)	Has a short end (used for tightening/loosening), a long end (for quicker turning), and a ball end (for easy orientation of key)	Has a screw to lock the jaws
Use	Does external, internal, depth, and stepped measurement accurately.	For checking perpendicularity /providing perpendicular edge for scribing	Accurately measures the height of a workpiece. Provides edge for scribing. Often used with an angle plate to keep work upright.	To measure angles/provide edge for scribing.	Used with a hammer to form indentations for drilling (centre punch) or for scribing (dot punch)	To lightly scratch surface to form a thin mark, making it more accurate than a marker Can be removed via polishing.	For marking lines, arcs or several equally spaced marks.	To tightly clamp onto work. Forces should be directed towards fixed jaw.	To clamp multiple works/ clamp a work to a surface. Shims may be used to protect work surface.	Combination pliers are for gripping flat & circular surfaces and cutting. Long nose pliers are for gripping items in hard to reach places.	For setting workpiece to be vertically upright	For holding cylindrical components.	Drives screws in, to secure parts together.	Tightens/loosens hexagonal screws	For gripping & locking onto an object.

	Shaping Tools					
Tool	Ball Peen & Claw Hammer	Mallet	Files	Hacksaw	Screw Hand Tap	Others:
Parts	A Ball Peen Hammer has a hardened steel head, with a flat head and a ball peen. A Claw hammer instead has a claw replacing the ball peen.	Has a rubber or nylon plastic head that may be replaceable.	Has differently rough surfaces from roughest to coarsest: (Bastard File, 2nd cut file, Smooth file) and comes in different profiles (square, flat, triangle, half round)	Has a serrated blade for cutting metal. Coarser serrations may be used for cutting wood.	Consists of the tap (3 types, from longest to 0 taper length: Taper Tap, Plug Tap, Bottoming Tap) and the tap wrench to drive the tap into the pre-existing hole.	Hand Drill For drilling holes Scroll Saw To cut curved profiles Acrylic Bender For bending sheets of acrylic/polycarbonate by heating Pop Rivet Gun Used with rivets; to secure two sheets of metal together with rivets. Die Thread For forming external screw threads
Use	A Ball Peen Hammer's flat head can be used for nails and punches, while the ball peen can be used for forming materials (ball helps with forming curved surfaces) A Claw Hammer's claw can be used for removing nails from wood.	For assembling parts or knocking parts out without damaging it.	For smoothing out surfaces or chamfering edges.	Cuts metal Serrations must face forward so that it cuts through material when pushed forward. Minimum 3 teeth must be in contact with work or else saw will get caught in work and may damage teeth.	Used for creating internal threads from pre-existing holes. Different taps need to be used in order of Taper Tap, Plug Tap and Bottoming Tap (longest taper → 0 taper) to first form the threads, then making sure the threads extend to the bottom of the hole. Sufficient lubrication is needed for tapping. The pre-existing hole (Tap Hole) must be drilled smaller than the desired tapped hole, so a M5 hole should have a predrilled 4.2mm diameter hole. Clearance Holes may be dripped in other works to house the screw, but not engage with its threads. Hence, it needs to be bigger than the desired hole, so a M5 screw may have a 5.4mm diameter hole for a normal fit, or a 5.2mm diameter hole for a tighter fit.	

DIGITAL FABRICATION

DESIGN SOFTWARE

CAD Software:
Creates design for part, can simulate motion & stresses on part

3D Scanning:
Scans the 3D form of parts for quick reverse engineering, which can be edited in CAD software

CAM Software:
Programs tool path for CNC machines, which may be done manually or automatically by the software.

POSTING/POST PROCESSING

After obtaining the 3D file, it is converted into G-code; instructions for the machine to fabricate the part, which may include machine initialisation & other needed codes.

ADDITIVE MANUFACTURING/3D PRINTING

Fused Deposition Modelling (FDM)
A plastic filament is fed through a heated nozzle, that can move along the xy plane to form layers, which form the desired part.
*as the filament is deposited from above, overhangs need to be accounted for, with supports.

Stereolithography (SLA)
A laser is aimed at a liquid polymer that solidifies onto the print bed when struck by the laser, forming layers. The print bed then moves up to form more layers to make the desired part.

Generally, 3D printing is for quick prototyping, but may not be as strong.

SUBTRACTIVE MANUFACTURING

Laser cutting
a laser moves along a plane to cut/engrave a sheet of material. (balsa/acrylic/paper/cardboard for low power lasers, steel/aluminium for high power lasers)

Router
Has an end mill to move in 2 or 3 axes to quickly prototype parts (as it has less power than a milling machine), by using sheet metal or foam.

CNC Milling, Turning, & Turn Milling
Like turning & milling, however operations are accurately and precisely done with computers, useful for large scale and fast production.
Turn milling is where a combination of turning and milling operations and tools are used to fabricate the part.