Boolean Algebra & Theorems

Boolean Theorems

Recall the 8 boolean theorems due to the base logic gates (AND, OR, NOT)

$$A + 0 = A$$
$$A + 1 = 1$$
$$A + A = A$$
$$A + \bar{A} = 1$$
$$A \cdot 0 = 0$$
$$A \cdot 1 = A$$
$$A \cdot A = A$$
$$A \cdot \bar{A} = 0$$

There some additional theorems, starting with the commutative, associative and distributive theorems:

$$A + B = B + A$$
$$AB = BA$$
$$A + (B + C) = (A + B) + C = A + B + C$$
$$A(BC) = (AB)C = ABC$$
$$A(B + C) = AB + AC$$

These theorems are similar to normal algebra, and are generally intuitive.

However, the rest of the theorems are not similar to normal algebra, as shown:

$$A + AB = A$$

▼ Proof

$$LHS = A + AB$$
$$= A(1 + B)$$
$$= A(1)$$
$$= A$$

$$A + \overline{A}B = A + B$$

▼ Proof

$$
\begin{aligned}
&LHS = A + \bar{A}B \\
&= (A + AB) + \bar{A}B \\
&= A + B(A + \bar{A}) \\
&= A + B(1) \\
&= A + B
\end{aligned}
$$

$$\bar{A} + AB = \bar{A} + B$$

▼ Proof

$$
\begin{aligned}
&LHS = \bar{A} + AB \\
&= \bar{A} + \overline{\overline{A}}B \\
&= (\bar{A}) + \overline{(\overline{A})}B \\
&= (\bar{A}) + B
\end{aligned}
$$

Note that the last two are “inverses” of the other,aka they are the same theorem

Boolean Simplification

After a boolean expression is formed (based on a truth table) it needs to be simplified before being implemented to make it easier and cheaper to build.

For SOP expressions (sum of products), it generally involves factorising common terms to obtain a term that can be simplified with the boolean theorems. (e.g. AA′, A+AB, etc.)
For POS expressions (product of sums), it generally involves expanding to reach a SOP expression, which can be simplified.

Note that something like (AB)′+BC is not SOP or POS, as the bar in (AB)′ encapsulates the whole product term

Examples:

$$(A + \bar{B}C)(A + B\bar{C})$$

▼ Solution

$$
\begin{aligned}
&= AA + AB\bar{C} + \bar{B}CA + \bar{B}CB\bar{C} \\
&= AA + AB\bar{C} + \bar{B}CA + \bar{B}B\bar{C}C \\
&= A + AB\bar{C} + \bar{B}CA + 0 \cdot 0 \\
&= A(1 + B\bar{C} + \bar{B}C)
\end{aligned}
$$

$$
\begin{aligned}
&= A(1 + (B\bar{C} + \bar{B}C)) \\
&= A(1) \\
&= A
\end{aligned}
$$

$$ACD + \bar{A}BCD$$

▼ Solution

$$
\begin{aligned}
&= CD(A + \bar{A}B) \\
&= CD(A + B)
\end{aligned}
$$

$$C\left(A\bar{B}(C + BD) + \bar{A}\bar{B}\right)$$

▼ Solution

$$
\begin{aligned}
&= C\left(A\bar{B}C + A\bar{B}BD + \bar{A}\bar{B}\right) \\
&= C\left(A\bar{B}C + A \cdot 0 \cdot D + \bar{A}\bar{B}\right) \\
&= C\left(A\bar{B}C + 0 + \bar{A}\bar{B}\right) \\
&= A\bar{B}CC + \bar{A}\bar{B}C \\
&= A\bar{B}C + \bar{A}\bar{B}C \\
&= \bar{B}C(A + \bar{A}) \\
&= \bar{B}C(1) \\
&= \bar{B}C
\end{aligned}
$$

De Morgan's Theorems

De Morgan's Theorems are the last 2 boolean theorems:

$$
\begin{aligned}
\overline{A + B} &= \bar{A}\bar{B} \\
\overline{AB} &= \bar{A} + \bar{B}
\end{aligned}
$$

De Morgan's theorems are used less for simplification, but more for transformation; usually expressing a logic circuit with AND OR NOT gates with universal gates, NOR and NAND.

One thing to note is that the NOT gate cannot be distributed, i.e.

$$
\begin{aligned}
\overline{A + B} &\neq \bar{A} + \bar{B} \\
\overline{AB} &\neq \bar{A}\bar{B}
\end{aligned}
$$

Universality

Recall that NAND and NOR gates are the universal gates.

This means that any other logic gate can be expressed in terms of NAND or NOR gates.

For example, with only NOR gates, we can make NOT, OR and AND gates:

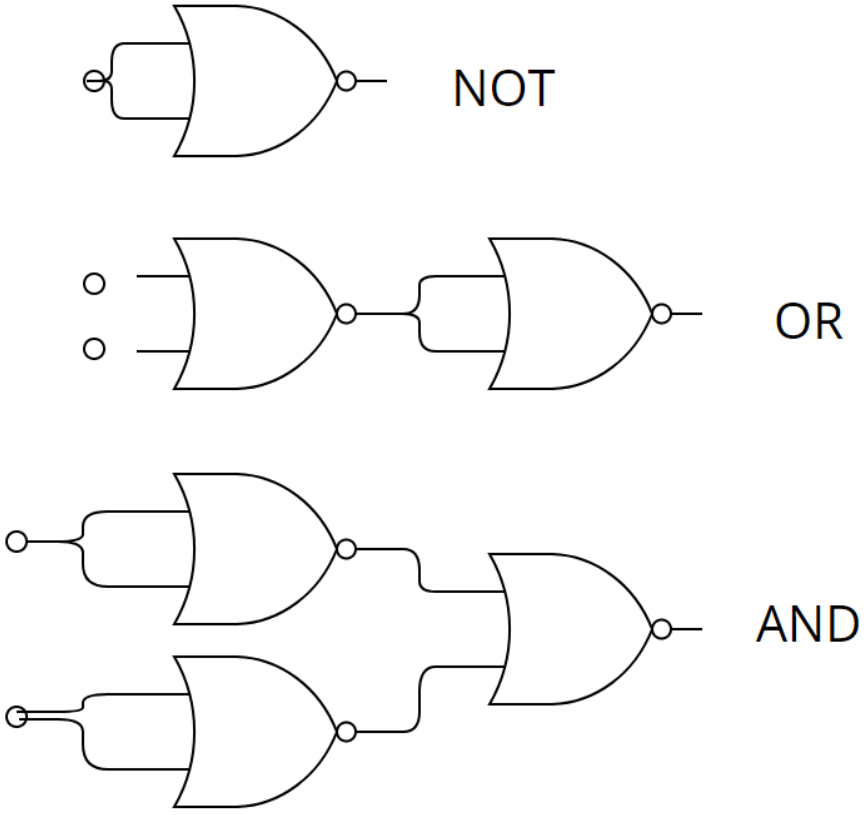

or with NAND gates instead:

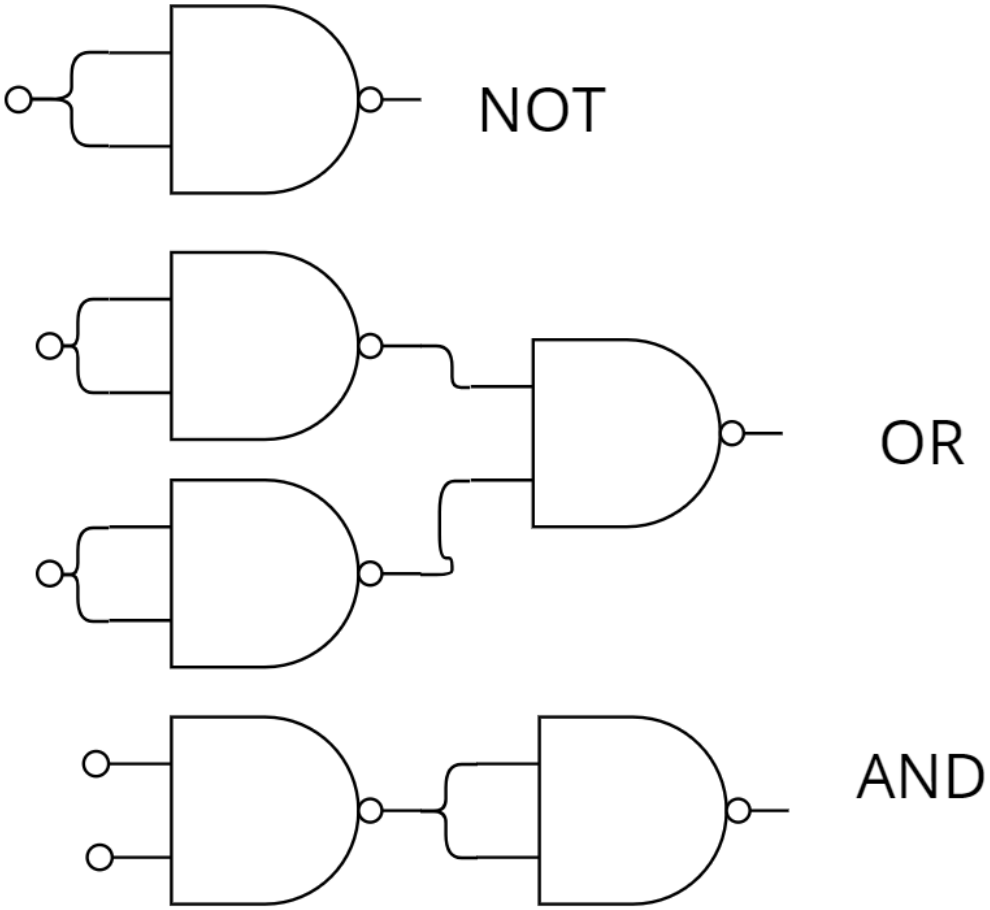

This means that ANY logic circuit can be modified with these gates.

For example given the following logic circuit, and given that we have to transform it into a NAND only circuit,

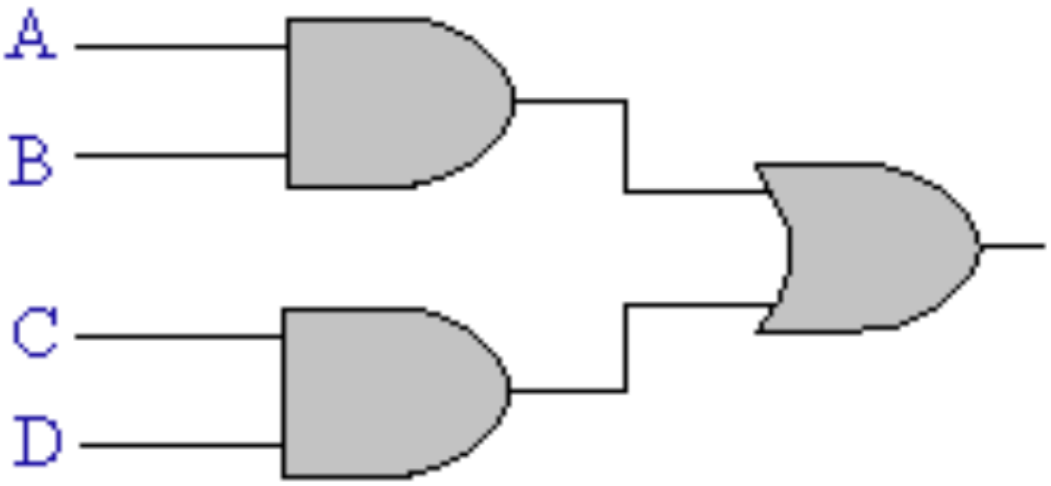

we can replace every OR, NOT and AND gate into its NAND counterparts.

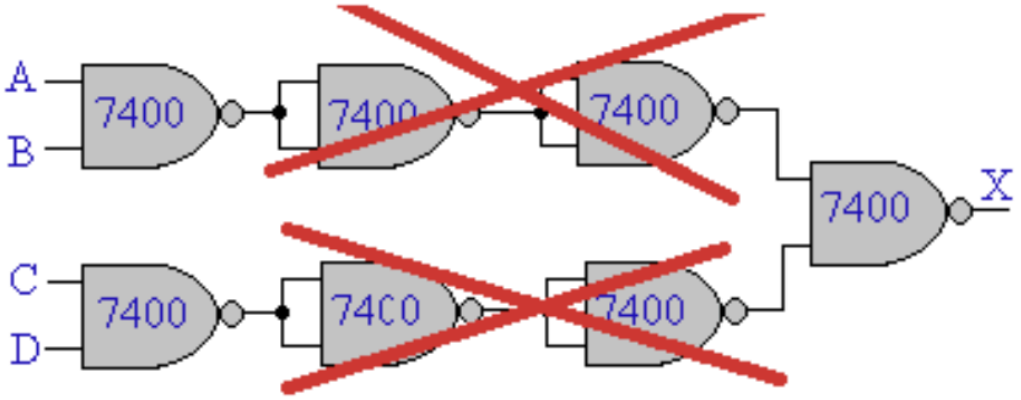

We notice how theres two NAND gates with its inputs joined chained together, which we can cancel out (as NAND gate with input joined together is a NOT gate, two not gates chained cancel out)

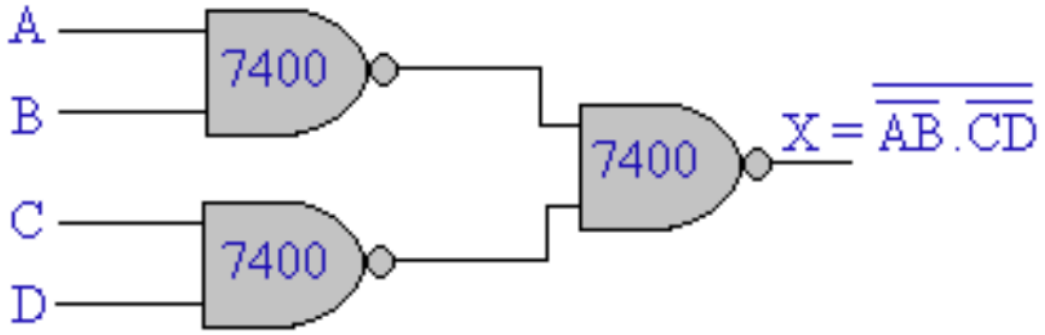

The circuit simplifies to the following.

Algebraically, we can simplify this as well:

$$\begin{aligned} AB + CD &= \overline{\overline{AB + CD}} \\ &= \overline{\overline{AB} \cdot \overline{CD}} \end{aligned}$$

De Morgan's Theorems help to simplify down to inverses of products, aka NAND gates.

Alternate Representations

We can represent AND OR NAND NOR gates with inverted inputs on the logic gates

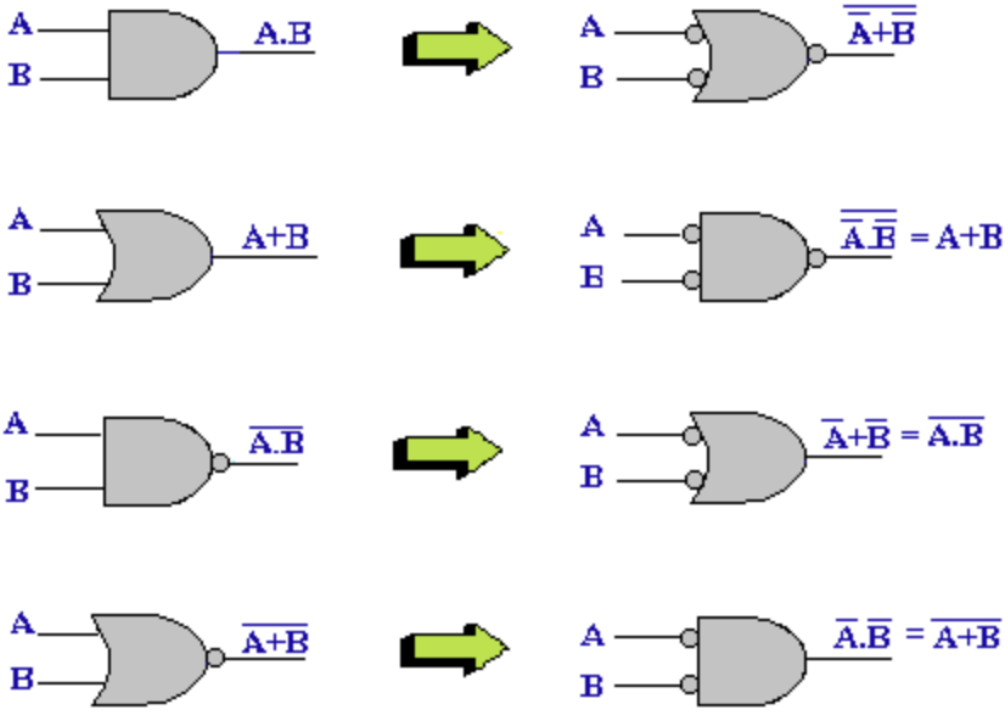

To invert the inputs, we have to first change the OR into an AND gate (or vice versa) and invert all inputs and outputs, representing an inverted input with a bubble, and taking into account of 2 inverters cancelling out.

apparently using different representations is useful to show the correlation between the logic circuti diagram and the boolean expression??? and its used to simplif yas well????? idk this part is weird

$$
\begin{aligned}
&A\overline{BC}D + AB + A\bar{B}CD \\
&= AD(\bar{B} + \bar{C}) + AB + A\bar{B}CD \\
&= AD\bar{B} + AD\bar{C} + AB + A\bar{B}CD \\
&= AD(\bar{B} + \bar{B}C + \bar{C}) + AB \\
&= AD(\bar{B} + \bar{C}) + AB
\end{aligned}
$$