CA2 Quiz Summary

Unit 1:

- Title Block
  - idk
- Scales
  - Scale is represented by drawing : actual
  - X:1 represents the drawing is X times bigger than the part.
  - 1:X represents the part is X times bigger than the drawing.
  - Say we have a part measured to be 10mm and is drawn on a 2:1 scale.
  - The annotation will always be the same as measured value (10mm)
  - The measurement OF THE DRAWING will be 10∗2=20mm.
- Line types

Line	Usage
thick continuous	Outline
thin continuous	Hatchline, Dimmension line,
thin short dash	Hiddenline
thin chain	Centerline, (PCD)
thin chain w/ thick ends	Cutting Plane
thin continuous irregular (curved lines)	Partial Views
thin short chain double dashed	Outline of movable parts

Unit 3:

- idk just note that views and isometric views are not similar i.e. top view of orthographic views does not refer to top view of isometric view (aka can be rotated to fit)
- chirality !!!!!!!!!!!!!!!!!!!!!!!!!!!111

Unit 4:

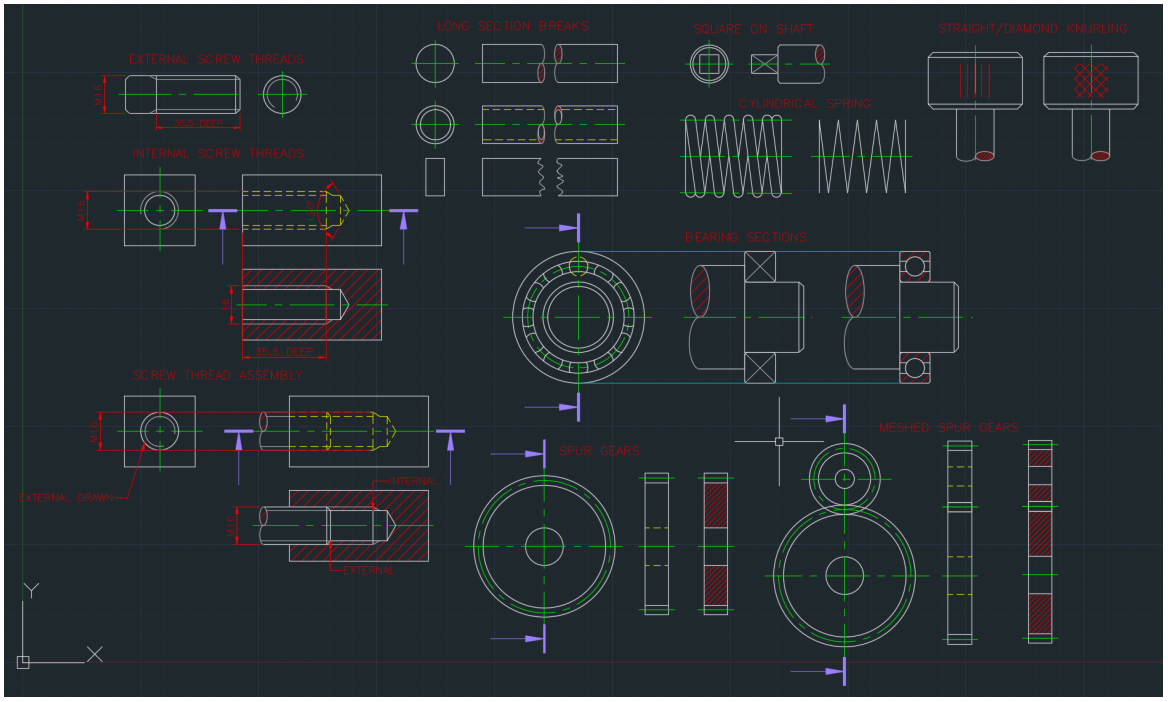

External screw threads have thinline on INSIDE (screw bits, etc.)

Internal screw threads have thinline on OUTSIDE (screw holes)

Internal screw threads have hatched threads under sectional view

Bearings can be sectioned differently as shown

Assemblies:

Shaft Attachments:

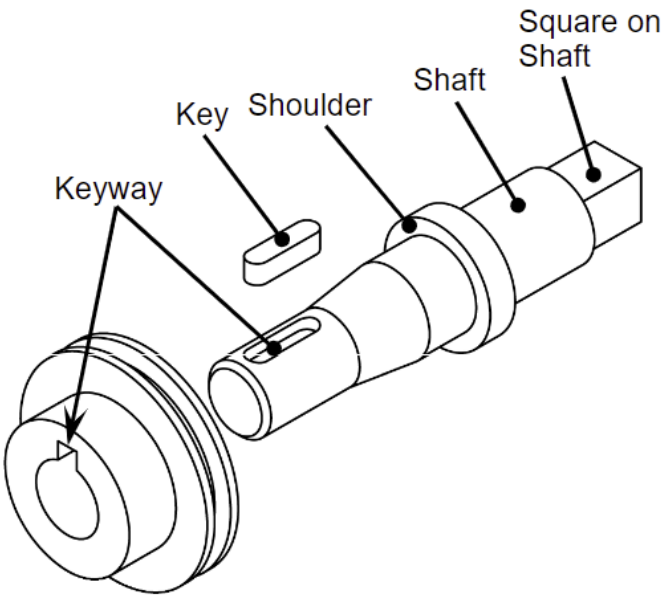

Shaft: main cylindrical rod for transmission of (rotational) motion

Square on shaft: An extension with a square cross section.

Shoulder: Sudden change in diameter of shaft (normal extrusion)

Key: A shaped metal piece inserted into a shaft to stop relative motion

Keyway: any groove in the shaft or hub (wheel-like) to receive the key.

Structural Assemblies:

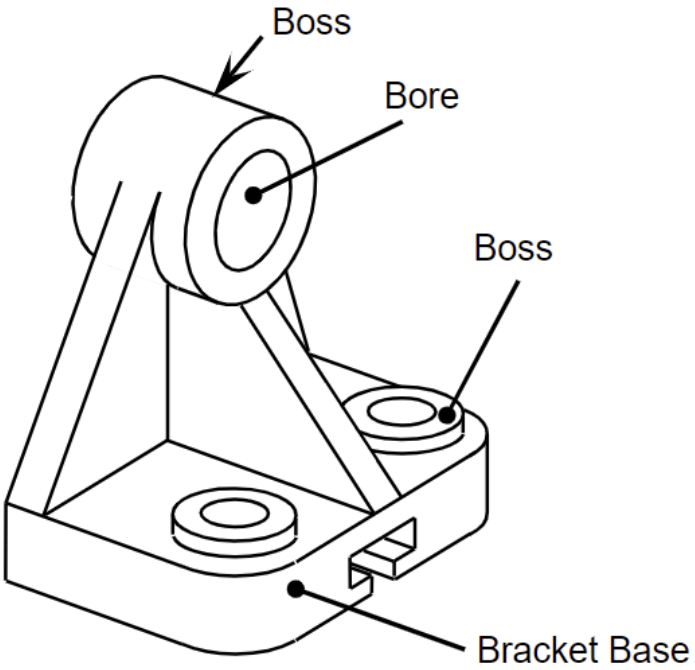

Boss: Cylindrical PROTURSION to accomodate a hole

Bore: Cylindrical Hole

Rib: structural

Bracket Base:

Hole Types w/ Screws

Unit 5:

Hatchline angle and spacing

Hatchlines are usually 45 degrees except when lines are parallel (overrided if one sectional view has 45 degrees already, even when parallel like csk holes)

Different angles or spacing are used for different parts in sectional views, however the same part will have the exact same hatchline convention (same spacing and angle)

Cutting Plane

Cutting plane uses thin chain line with thick ends (not double chain !!!!!!!!!!!!!!!!!!!!!!11)

Section Views

All section views do not include hidden lines but do include centerlines, regardless if the hole is visible in the section view.

Half Section:

HALF section views are seperatedb y hidden line

Offset Section & Aligned Section:

Across offset/angle, hatchlines are uninterrupted.

Revolve and Removed Section:

Revolve section shows the sectional view on the part as if it was rotated to face the projection plane. The section is drawn on the part itself, overlapping. (outline drawn with thin continuous line)

The removed section is the same drawing but off the part. (outline with thick continuous line)

Some items are not sectioned, being:

Webs (when sliced parallel)

Shafts (and similar bars, like axles)

Pins, Keys

Rollers & Ball Bearings (Ball bearing section view is used)

Gear Teeth (but same as normal gear section)

Screws, bolts, washers, any attachment shafts

Unit 6: Dimmensioning

Extension lines

Terminator

Leader Line

Permissable Gap

Short Extension: