Capacitors

A capacitor is a electrical component that can store electrical charge.

Capacitors consist of 2 parallel conductive plates with an insulating material between them, called the dielectric.

Capacitance

We can measure the capacitance of each capacitor, which is the storing ability of the capacitor.

The capacitance can be found by

$$C = \frac{Q}{V}, Q = CV$$

, where Q is the charge stored for a voltage V across the plates.

The unit of capacitance is Farads (F).

Capacitance is affected by the overlapping area of the plates, the distance between the plates, and the type of dielectric used.

Capacitance is directly proportional to the overlapping area $(C \propto A)$, inversely proportional to the plate's distance $(C \propto d^{-1})$, and the permittivity of the dielectric, which is dependent on the type of material used. $(C \propto \varepsilon)$.

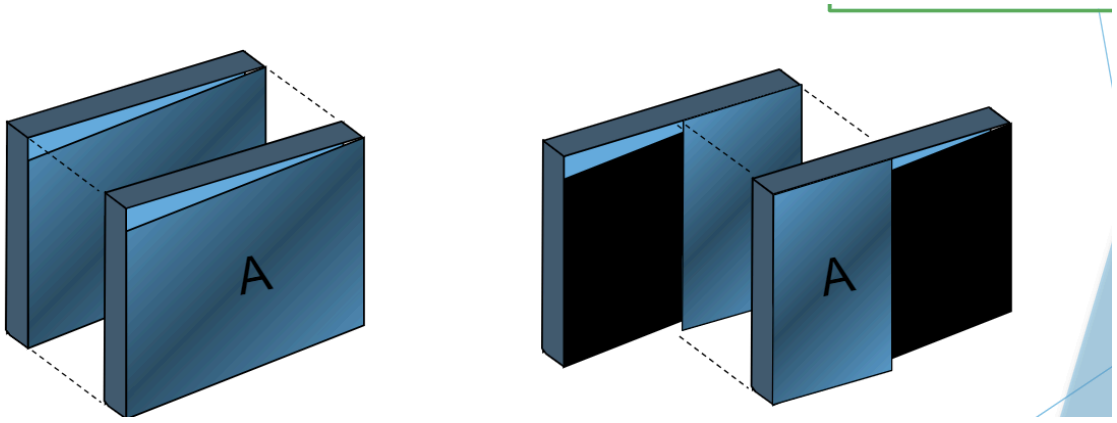

In other words,

$$C = \frac{\varepsilon A}{d}$$

Permittivity

Permittivity, similar to permeability from electromagnetism, refers to how easily an electric field can be established in the material.

Likewise, we can also measure permittivity relative to the permittivity of a vacuum as so:

$$\varepsilon_r = \frac{\varepsilon}{\varepsilon_0}, \text{ where } \varepsilon_0 = 8.85 \times 10^{-12} F/m$$

Permittivity is in Farads per meter, while relative permittivity has no units.

When capacitors store charge, they also store electrical energy in the form of an electric field between the two plates, when (opposite) electric charges are stored in the plates.

The energy stored is

$$W = \frac{1}{2}CV^2$$

where W is in joules.

Charging/Discharging Capacitors

When a capacitor is connected to a voltage source, the source causes one plate to be more negatively charged (as electrons flow into it) and one plate to be more positively charged (as the battery draws electrons out of the the plate). This causes an electric field to form between the plates. However, due to the insulating dielectric, the charges cannot flow and neutralise one another, so due to the electric field, the charges stay at the plates, keeping the capacitor charged even after being disconnected.

Likewise, when a charged capacitor is connected to a load, the electrons now have a path that allows the charges to neutralised (through the load), thus the capacitor discharges through the connected load.

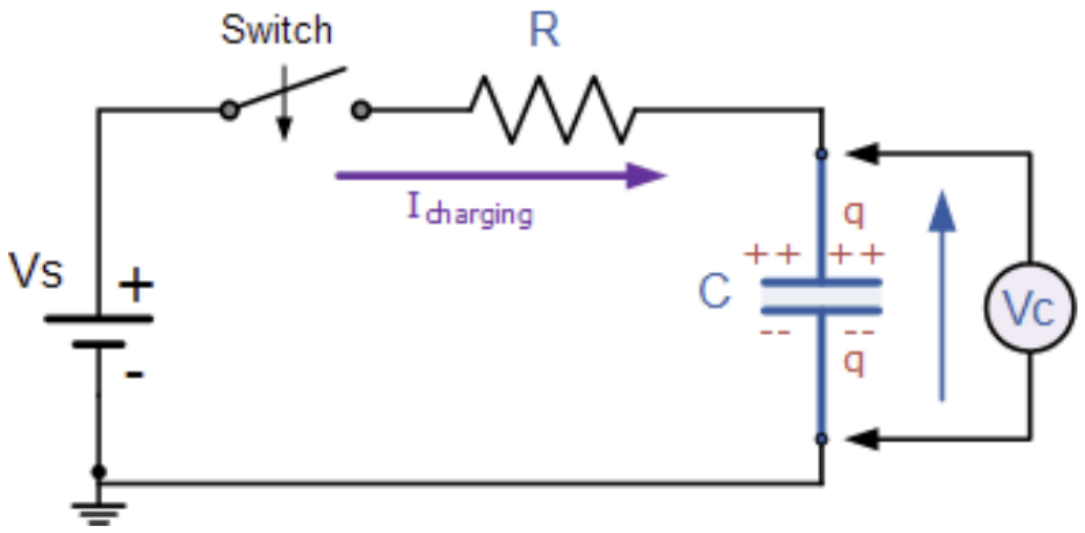

A circuit like this (RC charging circuit) can be used to charge a capacitor C.

Notice how when the switch is closed and the capacitor charges, the plate connected to the negative side becomes negatively charged, and likewise for the positive side.

Thus, this causes the voltage to increase the longer the switch is closed. With enough time, the capacitor will have a voltage of Vs.

However, if we were to treat the capacitor as a battery, it would have the opposite polarity to the charging source, thus we can think of the voltage source and the charged capacitor having a net voltage of 0, thus current will also be 0 once full charged (current actually decreases as capacitor is charged.)

The decrease in current can also be thought of as trying to put more and more current into a box, where at some point, the capacitor reaches a limit.

To find how long a capacitor takes to charge, the time constant can be used,

$$\tau = RC$$

where tau is the time constant in seconds, R is resistance(of the circuit) and C is the capacitance.

Note that capacitors also have their own internal resistance.

When a capacitor is charged for τ seconds, it is charged to 63.2% of its max charge (found by C∗V)

When it is charged for 5τ seconds, the capacitor is considered to be fully charged.

We can represent the relationship of voltage and current as so:

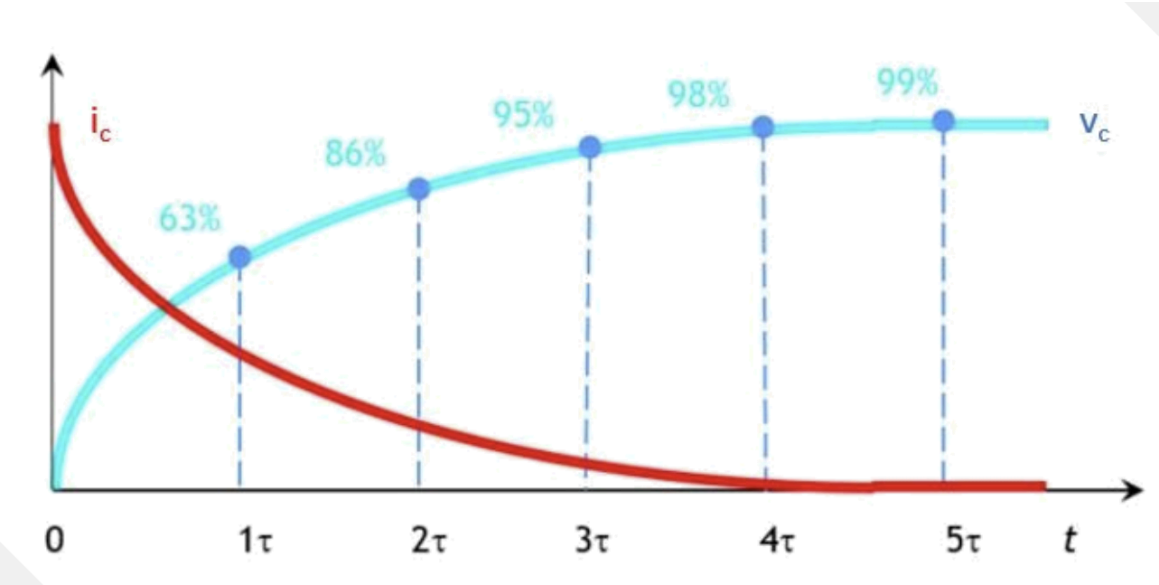

Likewise, to discharge the capacitor, we can use a similar circuit as above but replacing the voltage source with a short circuit.

We can find the voltage and current of the capacitor at a given time t,

$$v_c(t) = V_s(1 - e^{-\frac{t}{\tau}})$$

$$i_c(t) = I_s e^{\frac{t}{\tau}} = \frac{V_s}{R} e^{-\frac{t}{\tau}}$$

When the capacitor is being discharged, the voltage decreases exponentially, similarly to current when charged.

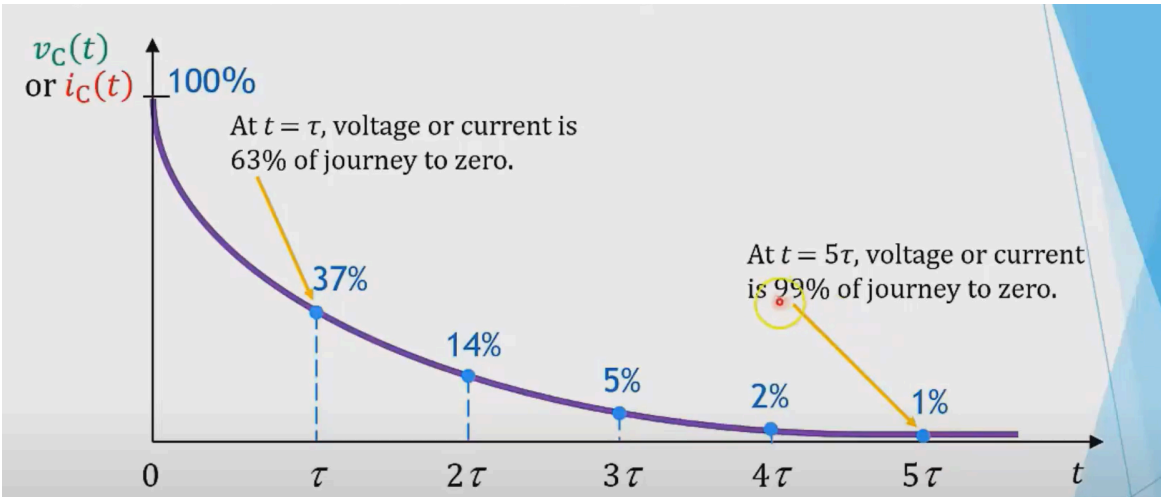

$$v_d(t) = V_s e^{-\frac{t}{\tau}}$$

Similar concepts apply, where:

after τ seconds, 63.2% of the charge is discharged, and its takes 5τ seconds for the capacitor to fully discharge.

One thing to note, a uncharged capacitor is essentially a short circuit, as it has a voltage of 0 but a current of Is.

A charged capacitor can also be thought of as a open circuit, as it has a voltage of Vs, but a current of 0.

Circuit Analysis with Capacitors

Series Capacitors

For capacitors connected in series, as the same current flows through them, and they charge together at the same time, by $Q = It$, all the capacitors will each store the same amount of charge. Thus,

$$Q_T = Q_1 = Q_2 = ... = Q_n$$

aka the total stored charge in the circuit is the same as each stored charge.

The total capacitance of capacitors connected in series is

$$C_t = \left(\sum_{k=1}^{n} \frac{1}{C_k}\right)^{-1} = \left(\frac{1}{C_1} + \frac{1}{C_2} + ... + \frac{1}{C_n}\right)^{-1}$$

Notice how it is the same formula for effective parallel resistance.

We can also use a “voltage divider” formula to find the voltage across a single capacitor, as so:

$$V = \frac{C_T}{C_x} V_T$$

where Ct is the total capacitance and Cx is the capacitance of the capacitor.

Parallel Capacitors

As current through multiple branches sums to the total current:

$$I_s = I_1 + I_2 + ... + I_n$$

When multiplying both sides by time to get charge, we see that total charge in parallel capacitors is the sum of each capacitor’s charge.

$$Q_T = Q_1 + Q_2 + ... + Q_n$$

The capacitance of capacitors connected in parallel is

$$C_T = \sum_{k=1}^{n} C_k = C_1 + C_2 + ... + C_n$$

In summary, the formulas of capacitors in series and parallel are “opposite” to resistors.