Circuits II

Series & Parallel Resistors

One result that can be derived from KVL and KCL is that series resistance is the sum of the constitutent resistors, or that

$$R_{eq} = \sum_{i=1}^{n} R_i$$

and a similar derivation can show that for parallel resistors, the equivalent resistance

$$R_{eq} = \left(\sum_{i=1}^{n} \frac{1}{R_i} \right)^{-1}$$

VDR & CDR

For resistors in series, the voltage across a resistor is

$$V = \frac{R_1}{R_t} \times V_s$$

while the current through a resistor out of multiple parallel resistors is

$$I = \frac{R_t}{R_i} \times I_s$$

Node Voltage Circuit Analysis

This circuit analysis method involves picking a reference node and setting it as ground, or 0V, and finding the voltages of all other nodes respect to the reference node. This allows you to express any voltage across components in terms of the node voltages, and hence the KCL equations for each node by using the node voltages.

For example, say we were tasked to find the node voltages and current ix in the circuit:

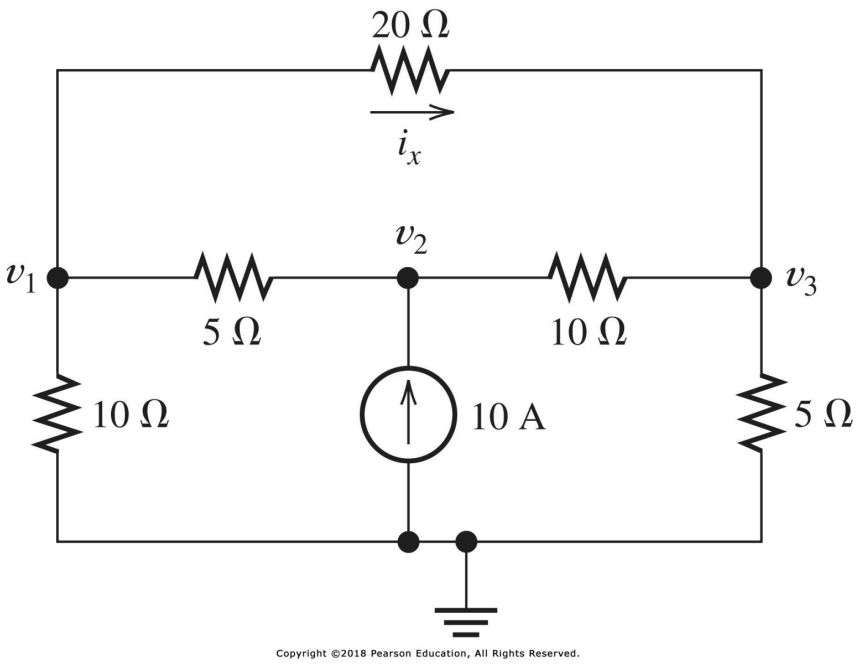

We can set our conventions like so:

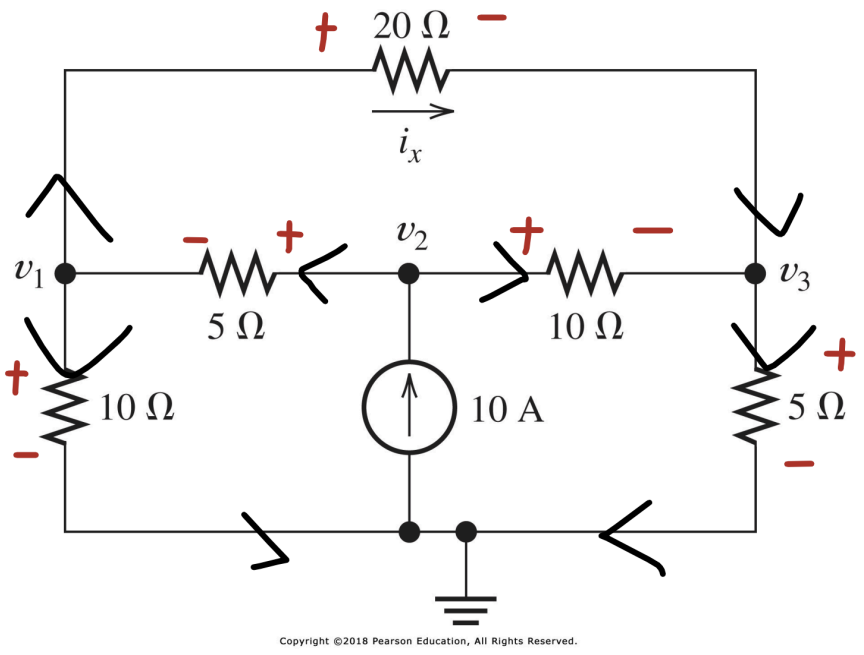

We have already defined the bottom node as the reference node, and hence, the KCL equations for each node are

$$
\begin{aligned}
v_1: \ & -\frac{v_1}{10} + \frac{v_2 - v_1}{5} - \frac{v_1 - v_3}{20} = 0 \\
v_2: \ & 10 - \frac{v_2 - v_1}{5} - \frac{v_2 - v_3}{10} = 0 \\
v_3: \ & \frac{v_2 - v_3}{10} - \frac{v_3}{5} + \frac{v_1 - v_3}{20} = 0
\end{aligned}
$$

which simplifies to

$$
\begin{aligned}
v_1: \ & -2v_1 + 4(v_2 - v_1) - (v_1 - v_3) = 0 \\
v_2: \ & 100 - 2(v_2 - v_1) - (v_2 - v_3) = 0 \\
v_3: \ & 2(v_2 - v_3) - 4v_3 + (v_1 - v_3) = 0
\end{aligned}
$$

$$
\begin{aligned}
v_1: \ & -2v_1 + 4v_2 - 4v_1 - v_1 + v_3 = 0 \\
v_2: \ & -2v_2 + 2v_1 - v_2 + v_3 = -100 \\
v_3: \ & 2v_2 - 2v_3 - 4v_3 + v_1 - v_3 = 0
\end{aligned}
$$

$$
\begin{aligned}
v_1: \ & -7v_1 + 4v_2 + v_3 = 0 \\
v_2: \ & 2v_1 - 3v_2 + v_3 = -100 \\
v_3: \ & v_1 + 2v_2 - 7v_3 = 0
\end{aligned}
$$

Which gives

$$v_1 = 45.45V, v_2 = 72.72V, v_3 = 27.27V$$

Hence, we can find ix as

$$i_x = \frac{v_1 - v_3}{R} = \frac{45.45 - 27.27}{20} = 0.909A$$

Had a different reference node been selected, the voltages would be different, but ix would be the same.

Node Voltage Circuit Analysis with Voltage Sources (Supernodes)

In the previous example, the only power sources were current sources. However, there are special cases we need to deal with for voltage sources.

If the component between a node and the reference node is just a voltage source, the voltage across the nodes is just the voltage due the voltage source, hence the voltage at the node is the voltage source.

However, it is not possible to find the current through voltage sources, which is where we use supernodes; collapsing two nodes together as one.

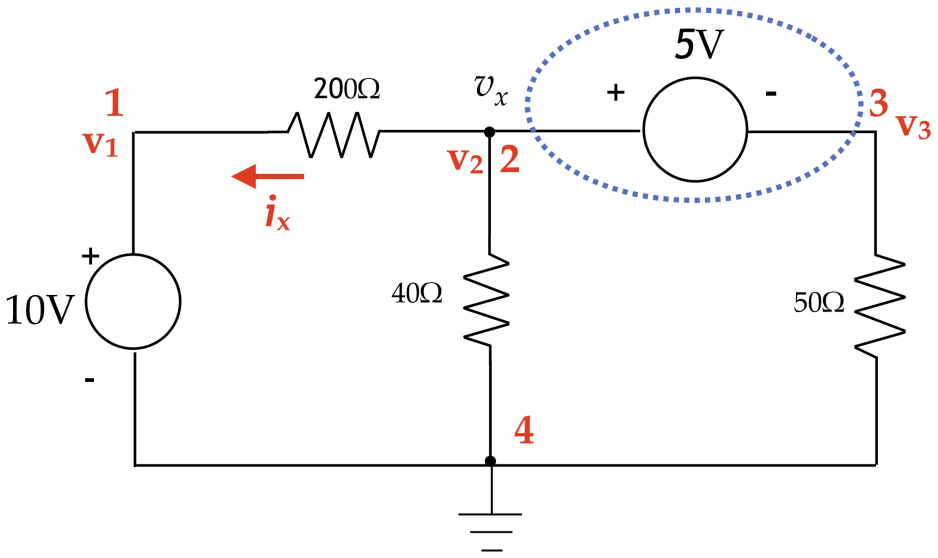

For example, say we were asked to determine vx and ix from the circuit shown.

We first define our conventions:

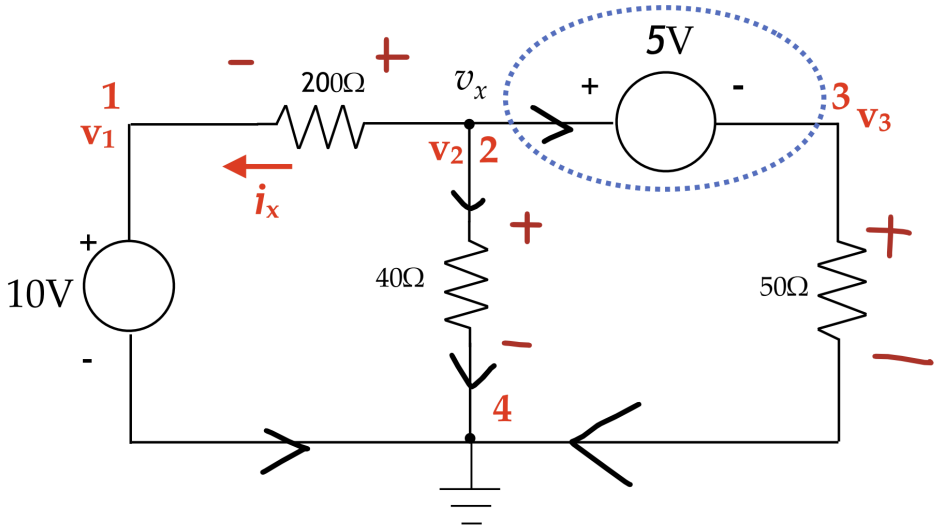

and the first node voltage we can determine is v1, as the only component between v1 and gnd is a 10V source, hence

$$v_4 = 0,\ v_1 = 10V$$

for v2 and v3, there is a voltage source in series with a resistor, hence the current through the branch cannot be determined by itself, however we can collapse the nodes 2 and 3 together to form a supernode. This means that we cannot find the KCL equations at v2 or v3 individually, but we can write the KCL equation for the supernode itself.

Hence, we analyse the KCL equation at the node $v_{2,3}$, as

$$-\frac{v_2}{40} - \frac{v_2 - v_1}{200} - \frac{v_3}{50} = 0$$

and we can substitute in v1:

$$-\frac{v_2}{40} - \frac{v_2 - 10}{200} - \frac{v_3}{50} = 0$$

and simplify as

$$\begin{gathered} -5v_2 - (v_2 - 10) - 4v_3 = 0 \\ -5v_2 - v_2 + 10 - 4v_3 = 0 \\ -6v_2 - 4v_3 + 10 = 0 \end{gathered}$$

We can then form another equation to allow us to solve for both unknowns, as the only component between v2 and v3 is the 5V source, hence

$$\begin{gathered} v_2 - v_3 = 5 \\ v_3 = v_2 - 5 \end{gathered}$$

and thus v2 can be solved by

$$\begin{gathered} -6v_2 - 4(v_2 - 5) + 10 = 0 \\ -6v_2 - 4v_2 + 20 + 10 = 0 \\ -10v_2 + 30 = 0 \\ v_2 = \frac{30}{10} = 3V \end{gathered}$$

As v2 and vx are the same node,

$$v_x = v_2 = 3V$$

Thus, to find ix, we use

$$i_x = \frac{v_2 - v_1}{200} = \frac{3 - 10}{200} = -0.035A$$

Circuits with Dependent Sources

Recall dependent sources from Circuits I. In node voltage analysis, we must include them in our equations.

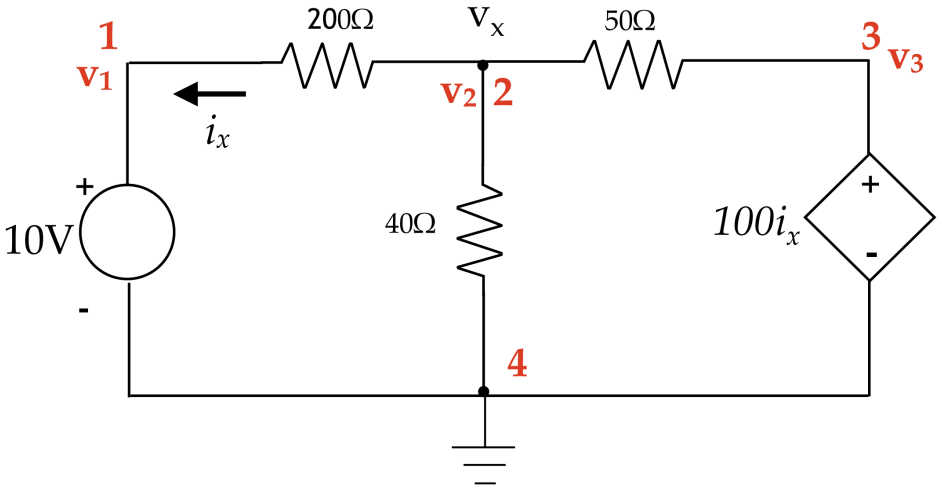

Again, set our conventions:

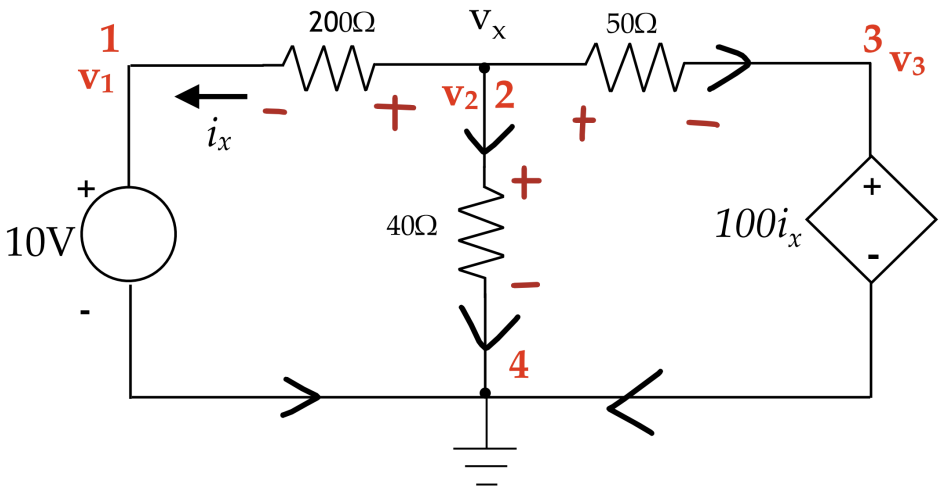

and by the two voltage sources we know that

$$v_4 = 0,\ v_1 = 10,\ v_3 = 100i_x$$

Hence, we need to determine the KCL equation at v2, as

$$
\begin{gathered}
-\frac{v_2}{40} - \frac{v_2 - v_1}{200} - \frac{v_2 - v_3}{50} = 0 \\
-5v_2 - (v_2 - v_1) - 4(v_2 - v_3) = 0 \\
-5v_2 - v_2 + v_1 - 4v_2 + 4v_3 = 0 \\
v_1 - 10v_2 + 4v_3 = 0
\end{gathered}
$$

Substitue in the other known node voltages:

$$
\begin{gathered}
10 - 10v_2 + 4(100i_x) = 0 \\
10 - 10v_2 + 400i_x = 0
\end{gathered}
$$

To form another equation, we can express ix in terms of the node voltages:

$$
\begin{gathered}
i_x = \frac{v_2 - v_1}{200} \\
i_x = \frac{v_2 - 10}{200}
\end{gathered}
$$

and thus, v2 can be solved as

$$
\begin{gathered}
10 - 10v_2 + 400\left(\frac{v_2 - 10}{200}\right) = 0 \\
10 - 10v_2 + 2(v_2 - 10) = 0 \\
-8v_2 - 10 = 0 \\
v_2 = \frac{10}{-8} = -1.25V
\end{gathered}
$$