# CNC Milling Fundamentals

The machine used for this module is the MAZAK Vertical Machining Center, with a MAZAKTROL MATRIX NEXUZ 410A-II controller.

It is a 3 axis milling machine with X 560mm, Y 410mm and Z 510mm, excluding the vice. It has a 30 tool magazine and has a max rpm of 12000rpm.

The tools used during milling can either have indexable carbide inserts, or be solid carbide cutters.

Inserts are more rigid and can withstand higher load, thus making them used for roughing. They are also much more economical.

Solid carbide cutters are able to achieve smaller hole diameters and can perform deeper cuts. They are used more for finishing cuts.

The tool can be fed in multiple ways depending on the application:

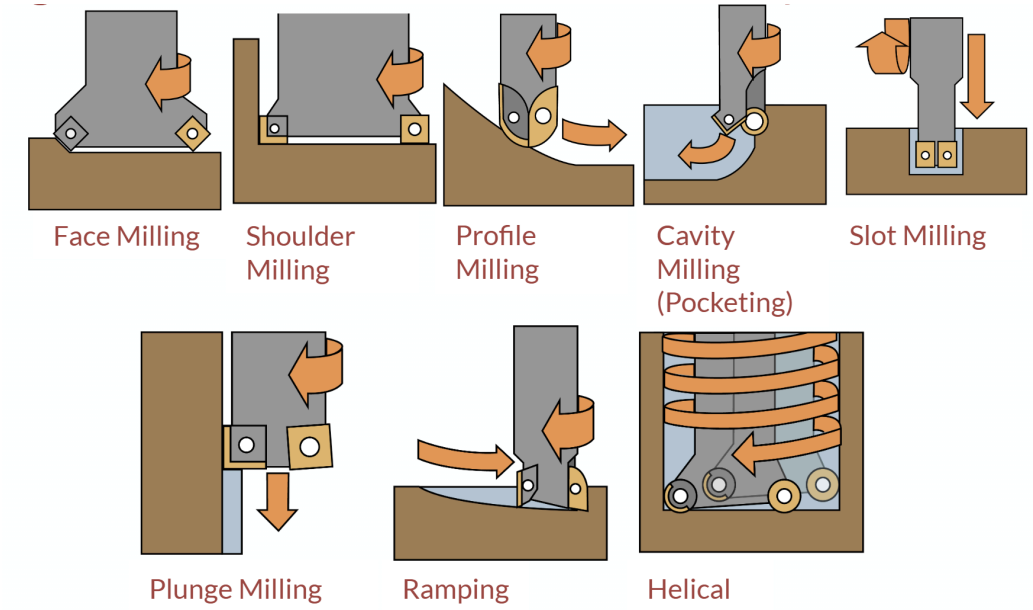


but there are 3 main ways to feed a tool:

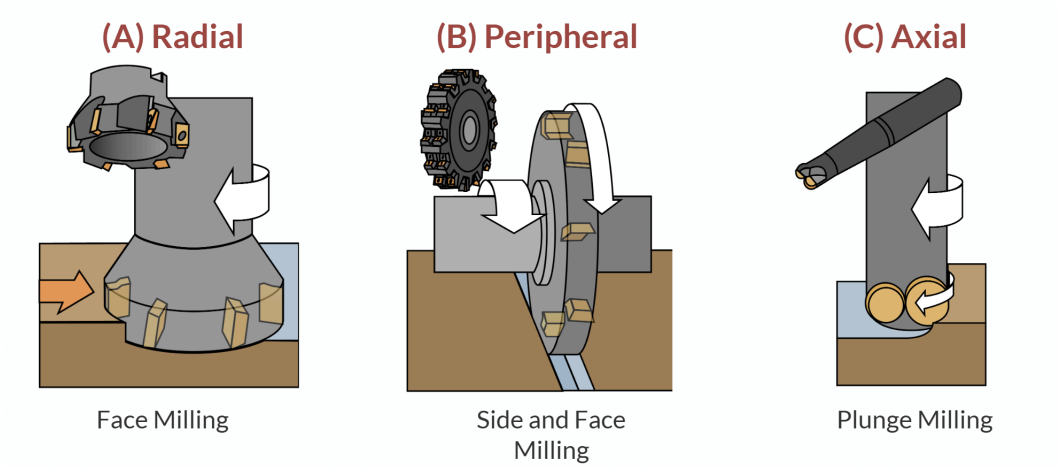


Radially involves feeding the tool along a radius of the circular tool

Peripheral involves feeding the tool tangentially to the rotation of the tool.

Axial involves feeding the tool along the tool's axis (usually vertically)

To move along the three axes, the table moves along the X and Y axis while the spindle moves vertically along the Z axis. The machine zero point is the top back right corner of the machine, thus every movement from the 0 point will be negative:

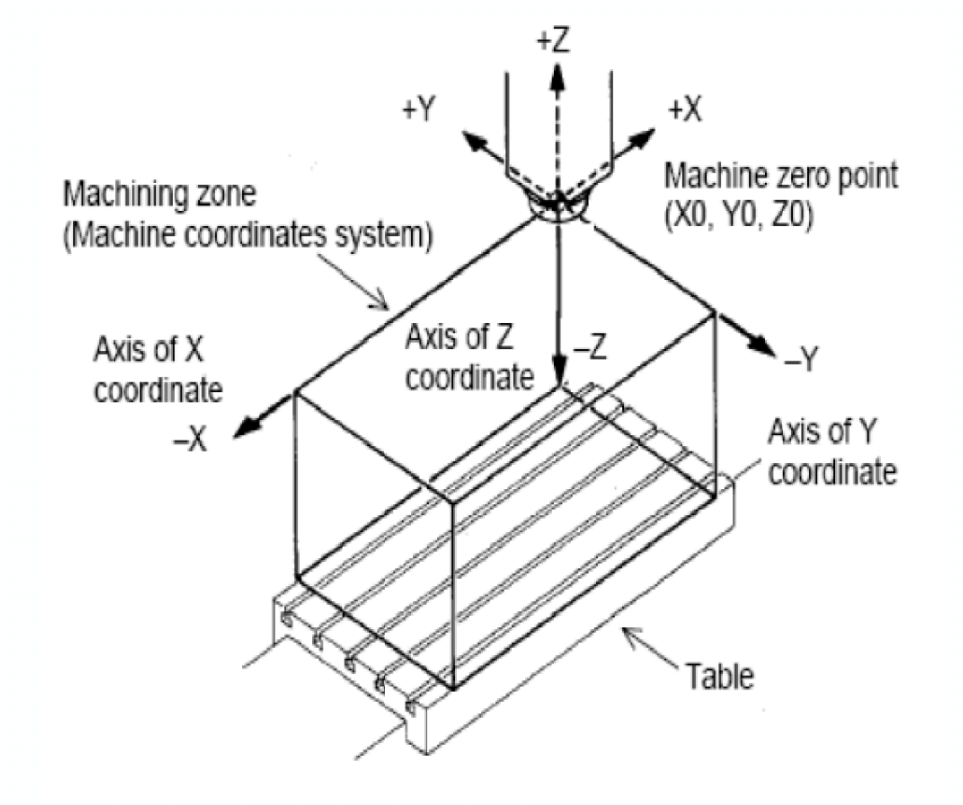

To program these machines, we use NC codes, however there are some differences to lathes,

During initialisation, we use

G0 - Tool nose radius compensation cancel

G54 - Rapid Interpolation

G17 - Plane Selection (x-y)

G80 - Hole Drilling Fixed Cycle Cancel

and for tool changes, instead of T0x0x, we use Txx M6 (e.g. T11 M6)

Typically after initalisation, we use

G0 G90 G54 Xabcd Yabcd S1000 M3

meaning move the table to (abcd, abcd) and turn on the spindle at 1000rpm clockwise

afterwards, some tool lenght offset is included to account for the length of the cutter.

Then, the tool is moved along its toolpath and once done, turns off the spindle with M5 and uses G28 to return back to the machine zero point.

Like the program zero point which is on the workpiece in turning machines, we use a workpiece coordinate system (WPC) and a workpiece zero point on the CAD model of the workpiece

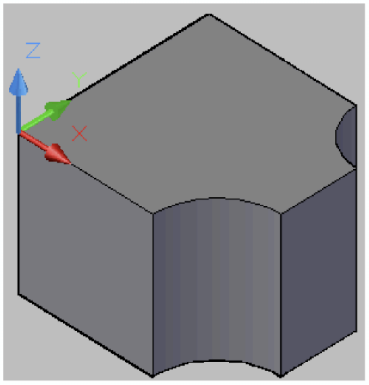


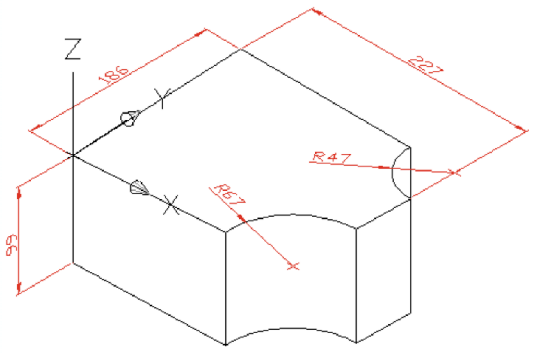


By defining a workpiece zero point, you define datums that are used for defining other geometries.

During machining, we need to register where the workpiece zero point is respect to the machine zero point. In total, there are 6 WPCs (G54 to G59) available, with G54 as the default, but others may be used depending on the setup.

Each of these g codes actually represent a different work offset, which is how the workpiece zero point is set.