Design for Joints & Assembly (DFJA)

Joints are defined as permanent connections between two parts, while assemblies are non permanent connections that can be removed. The choice between the two is depends on the size, materials used, manufacturing process, and whether the parts need to be dismantled for servicing during product life.

Shown are some common ways to form joints/assemblies:

	Heat Application		Chemical	Mechanical Methods			
	Welding	Brazing and Soldering	Adhesives	Threaded fasteners	Rivet	Clip	Interference
Ability to dismantle	Permanent	Semi-permanent	Permanent	Yes	Semi-permanent	Depends on design	May be possible
Distortion during process	Yes, with most type	Some	No	No	No	No	Some
Suitable material	Fusible	High melting point metal	Most	All	All	All	All
Ability to hide joint	Excellent	Good	Good	Poor	Poor	Poor	Possible

The purpose of design for joints and assembly (DFJA) is to design the parts to best suit the desired connection method.

The types of connections of focus are:

Welding

There are many different types of welding methods but the two most common ones are fusion welding and solid state welding.

Fusion welding involves melting the base metal to join parts together, with other filler material added to provide further strength. Some methods involving this includes gas welding, metal arc welding, TIG (tungsten inert gas) and laser.

Solid state welding involves joining by applying pressure, or heat (below metal m.p.) and pressure, without directly melting the base metal. Filler

metal is not added in these processes. Some examples of this include friction welding and resistance welding.

Some typical joints which welding is applied is shown:

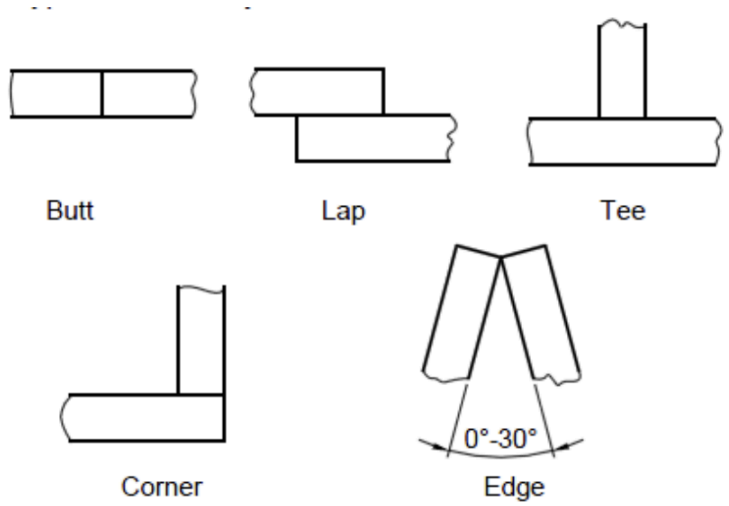

To secure these joints, different types of welds are used, however the most common types are fillets and butt/groove welds:

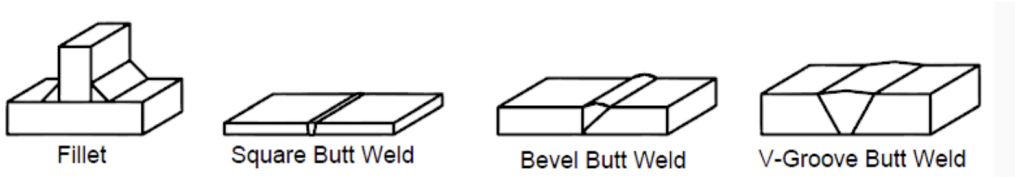

Some design considerations of welding include:

- Weld Similar Thicknesses
  - welded parts should be of similar thicknesses to ensure the parts expand at the same rate due to the heating, which can be achieved by producing extra extrusions of similar thicknesses, or machining out grooves to match the thickness
- Provide Sufficient Access
  - sufficient access must be provided for the welding equipment, by placing them in the horizontal plane exposed above, ideally.
- Weld Order Clarity
  - make the weld order clear in the drawings with purpose
- Avoid Final Welding

Welding should not be the final process as it causes distortion and affects tolerances. machining or other finishing operations should be done after welding

Avoid Rigid Structures

Avoid making structures rigid by welding as it prevents stress distribution

weldments should also be placed to minimise stress concentrations.

Weldment Support Loads

weldings should be placed to support the loading conditions:

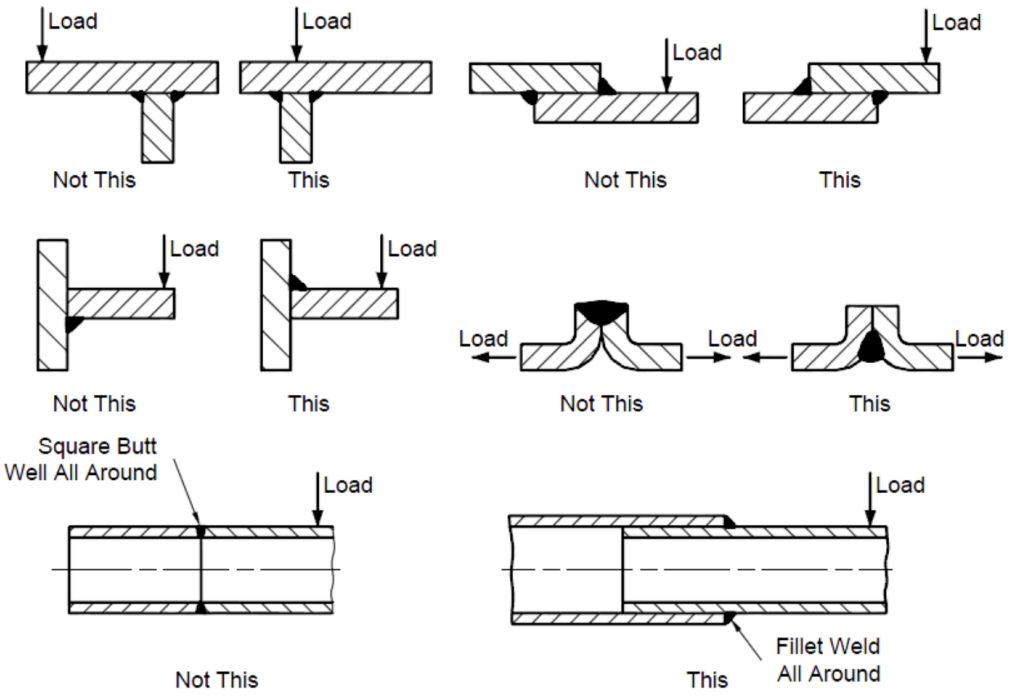

Avoid Machining Weldments

If a surface needs to be machined, avoid welding on the surface.

Alternatively, spot welding can be used to locally weld an area.

Spot welding is fast, cheap, produces low distortion due to localised heat input and requires no filler material, with high repeatability. This makes it suitable for automated operations and sheet metal assemblies.

However, joints need to be sealed against moisture to reduce corrosion, material needs to be overlapped to form joints, and a high capital cost is needed.

Integral Features

For sheet metal components, integral features consist of tabs and crimped edges that interlock with one another. Some examples include:

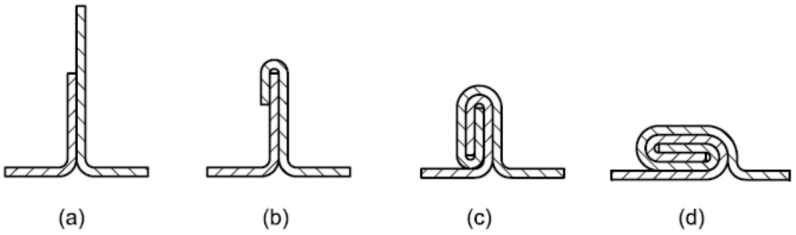

(a): Seam joint, to be sealed with sealants, adhesives or solder, used in drink cans and care-radiator edges.

(b): crimped joint, formed by external pressure to cause permanent deformation of sheets, causing mechanical interference, used in electrical components.

(c): Lanced joint, where the deformation is restricted to the tabs:

(d): Unsuitable due to being hard to dismantle later

The above figure also shows the stages in forming a double-lock seam.

Other joints include crimped joints, like so:

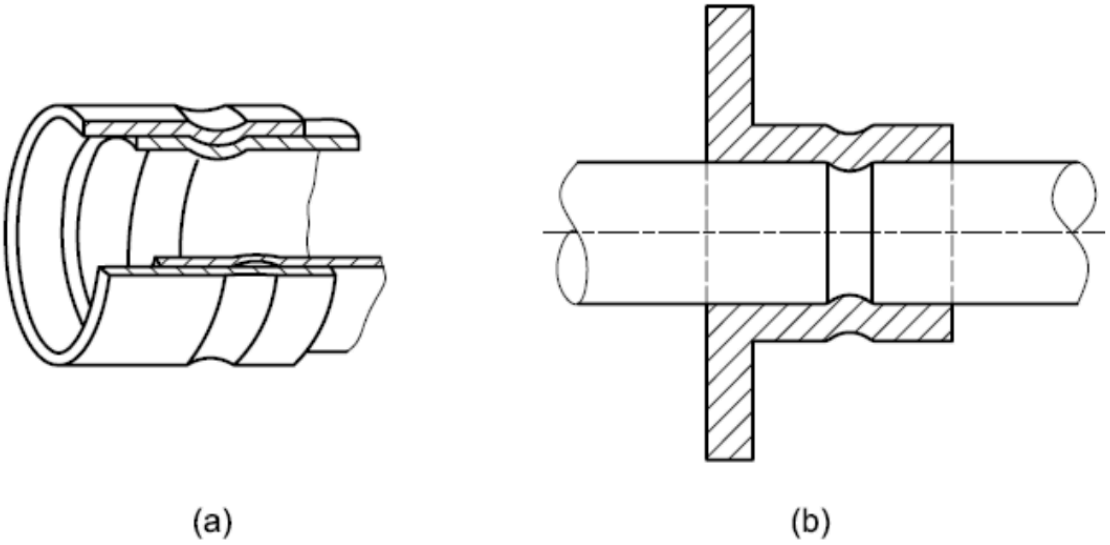

Or metal stitching:

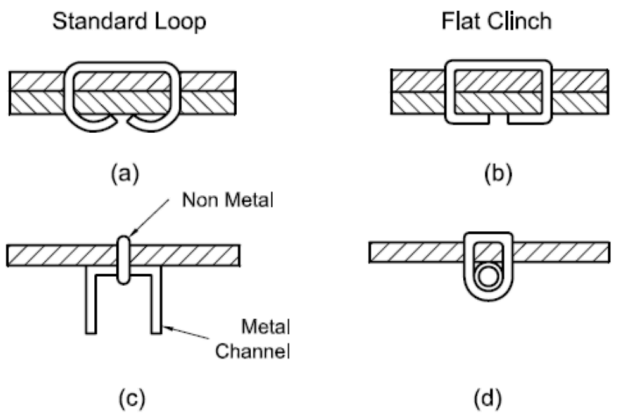

Or with spring and snap in fasteners:

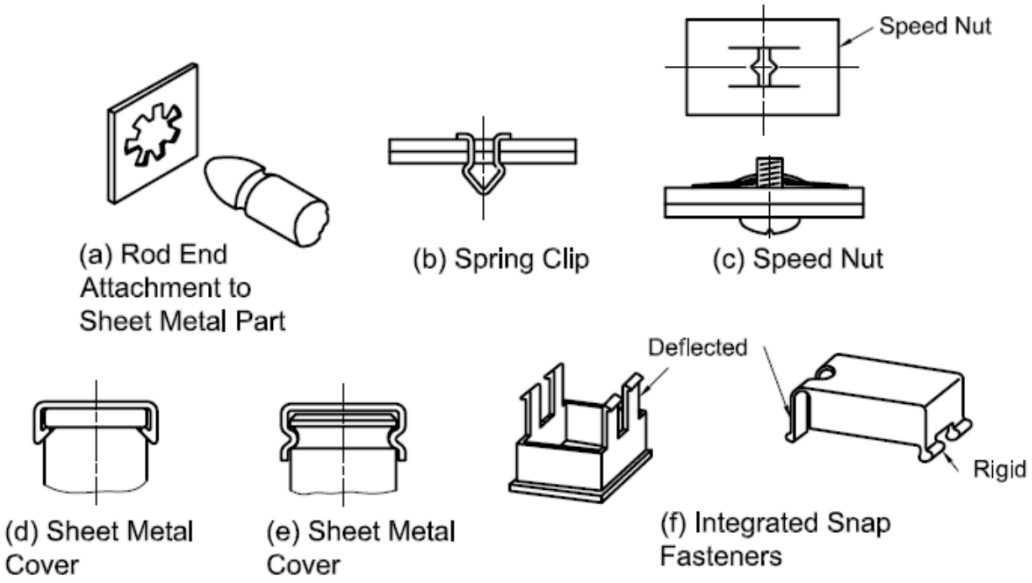

Threaded Fasteners

Threaded fasteners commonly include screws and bolts. For the ISO standards, the two pitch series used are coarse and fine pitch.

Coarse pitch is most commonly used for general assembly when vibration is non critical and frequent disassembly is required. Fine pitch is better used for fine adjustments and higher tensile load, but thread stripping in high load applications is more likely and must be considered for.

Different screws have different kinds of fits:

Tolerance and Fits

Class of Fit	Tolerance Class	
	Internal Threads (Nut)	External Threads (Screw)
Close	5H	4h
Medium	6H	6g
Free	7H	8g

Table of thread tolerance and fit

Medium fit is most commonly used, with the minimal clearance allowing for easier/high speed assembly, without galling or seizure.

Close fit is when higher precision and close accuracy of the threads is required

Free fit is when quick and easy assembly is required, even when threads are dirty or damaged.

For threads, we label them as Ma x b - T, M standing for ISO Metric Thread System, and a is the nominal diameter, b is the pitch, and T is the ISO tolerance, depending on if it is a threaded or tapped part (e.g. 6H, 6g)

The most common type of threaded fasteners used are bolts and studs, where bolts have a head but studs do not.

Bolts can either be used as a through bolt where the bolt is passed through two clearance holes and secured with a nut, or as a set bolt where the last material to be clamped is tapped to act as a nut. Hence, these parts are mostly used in machine design

Studs are used by fastening one end into a tapped hole and the other with a nut, used as pilots to facilitate assembly.

For the type of head used, different heads are available for different purposes:

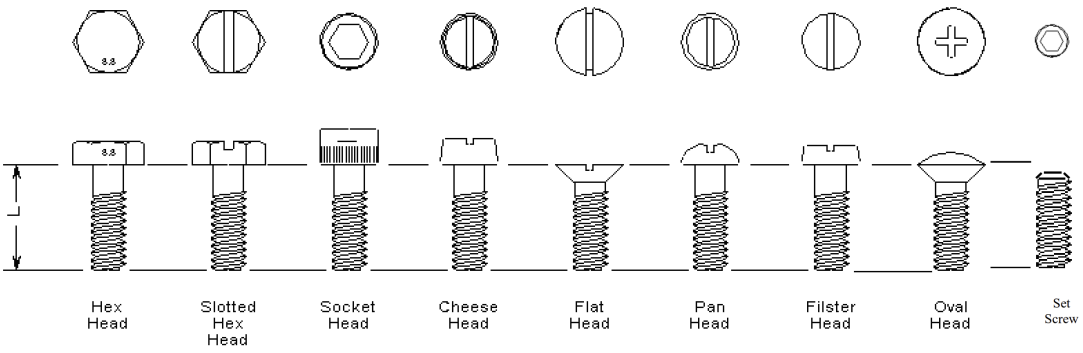

Some design considerations for threaded components include:

Give Sufficient Engagement

Sufficient thread engagement must be given, depending on the application:

Recommended Thread Joint Length	
General Clamping	1 x Thread Diameter
Vibration	2 x Thread Diameter
Shock and Vibration	Up to 3 x Thread Diameter
Thin joints (eg. Sheet metal)	3 x Thread Pitches minimum

Drill Sufficiently Deep

blind holes should be drilled sufficiently to allow clearance for the tap, minimum D/2

Orienting Vertical Bolts

Vertical bolts should have the head facing up, for easier assembly and helps if the nut is loose

Use Plain Washers

Plain washers act as a bearing surface and distribute the clamping force

Allow Sufficient Spacings

Bolts should be placed minimum 2D away from other bolts and edges,

Give Assembly Space

Enough vertical clearance must be given to allow the assembly of the bolt into the clearance holes

Non Threaded Fasteners (Rivets)

The main type of non-threaded fasteners are rivets, which are different from bolts in that:

they are faster and easier to apply than bolts

they are highly reliable and are unlikely to loosen during service

they can be applied even if there is only access to one side of the assembly

they are semi permanent and can be removed by drilling it out (harder than unscrewing bolts)

Some design considerations include:

Cross Sectional Area

Sufficient cross sectional area must be given to resist the shear forced put into the rivet during service.

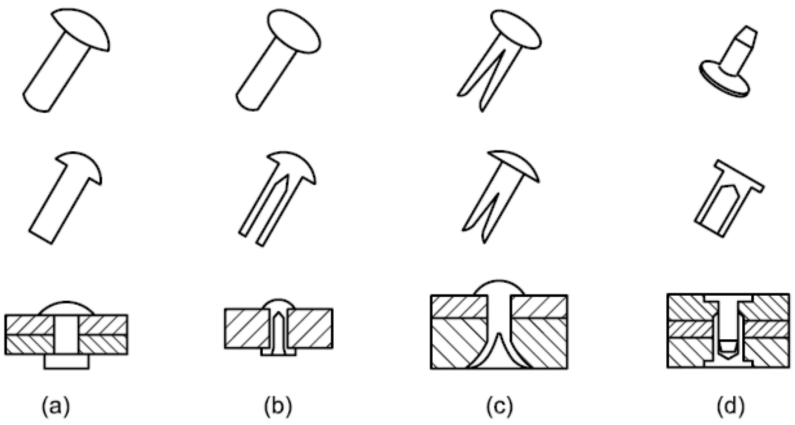

For example, different rivets have different cross sectional areas depending on the purpose. shown are 4 types: solid, tubular, split and compression.

Appropriate Rivet Length

rivet length should be long enough to house the mushroom cap at the end if needed, but not too long so that buckling and bending happens

Space Out Rivets

Rivets should not be placed too close to edges to avoid stress concentrations

Provide Sufficient Clearance (Obstructions & Curvature)

Clearance should be given to the riveting tool, either by making sure no parts obstruct the riveting tool from reaching the rivet, or making sure the surface around the part is flat/has no curvature like filets that prevents the tool from sitting square with the rivet.