# Digital Vs Analog

Quantities

We can vaguely categorise certain quantities on if they are digital or analog.

In general, we can consider digital quantities to be discrete, with distinct steps(e.g button states), while analog quantities are continuous, with no continuous steps (e.g. resistance of a variable resistor).

Signals

In electronics, quantities like voltage and current can change due to transducers(component that converts other energy to electrical energy, like sensors), which we call a signal.

The output signal can be analog, digital, or binary digital.

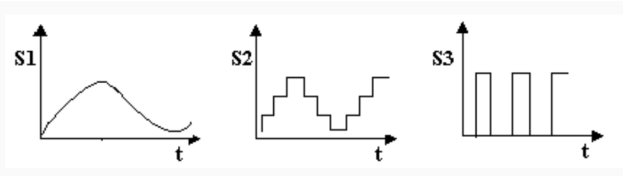


Digital signals (digital/binary digital) have distinct steps in the quantity measured as time changes.

Binary Digital signals instead have only 2 distinct steps

Any other signal that does not fit the digital signal definition is analog, even if it may have straight line portions.

These signals can be processed; meaning measuring and displaying them.

They can be measured via digital (button matrix) or analog(dials) means, and can be displayed by digital(LCD 7 segment display) or analog(clock hands, analog meters) means.

Generally, digital processing are easier to design, less susceptible to noise, has higher accuracy and precision, can be easily stored, can be easily operated on, take up less space, and digital circuits are more common.

However, they may not sufficiently represent the analog world, like when recording analog data, often requiring converters which take time, and some circuits cannot be built with digital signals or may not necessarily be cheaper with digital signals.

Converting Signals

Signals are often converted from analog to digital (ADC, analog-digital converters) to store signals easier, and from digital to analog (DAC, digital-analog converter) to obtain the original signal for easier processing (e.g. amplification)

Binary Quantities & Logic Levels

In circuits, we can represent binary quantities with logic levels.

If we designate a range of high voltages to be a 1, and a range of low voltages to be a 0, we do not need to care about the actual voltage to communicate binary quantities, but only which range it fits in.

For TTL (transistor-transistor logic) integrated circuits,

0 - 0.8V is binary 0, or logic L (low)

2 - 5V is binary 1, or logic H (high)

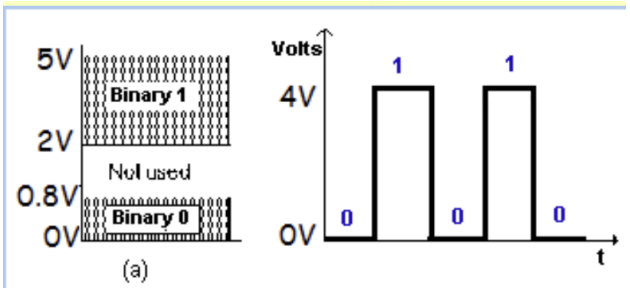


The resulting waveforms of components will be binary even though the voltage may not be fully binary. For example, an inverter/not gate may have the two possible input and output voltages:

| Input | Binary Input | Output | Binary Output |
|---|---|---|---|
| 0V | 0 | 5V | 1 |
| 0.3V | 0 | 4.5V | 1 |
| 5V | 1 | 0.5V | 0 |
| 3V | 1 | 0.2V | 0 |

Either way, the input and output waveform will follow the binary/logic inputs/outputs, not the voltages.

Parallel and Series Transmission

Digital Information can also be transmitted via parallel or series transmission.

Parallel transmission works by transmitting each bit via with a wire.

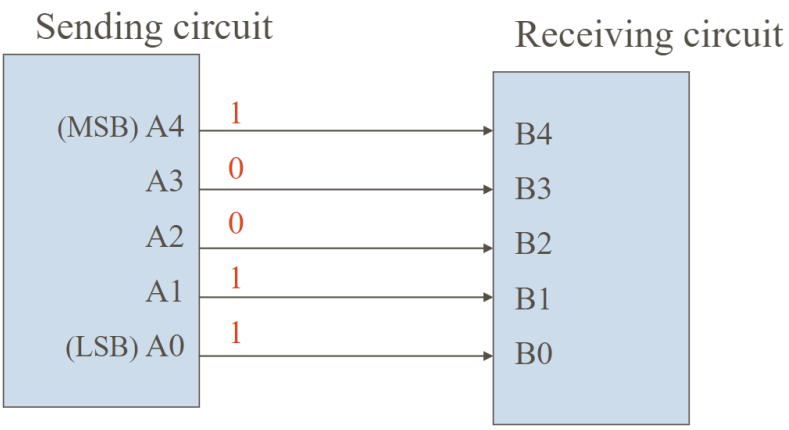


This makes it a faster transmission method, however is more prone to error, and is more costly.

Series Transmission works by transmitting all the bits with only 1 wire over time.

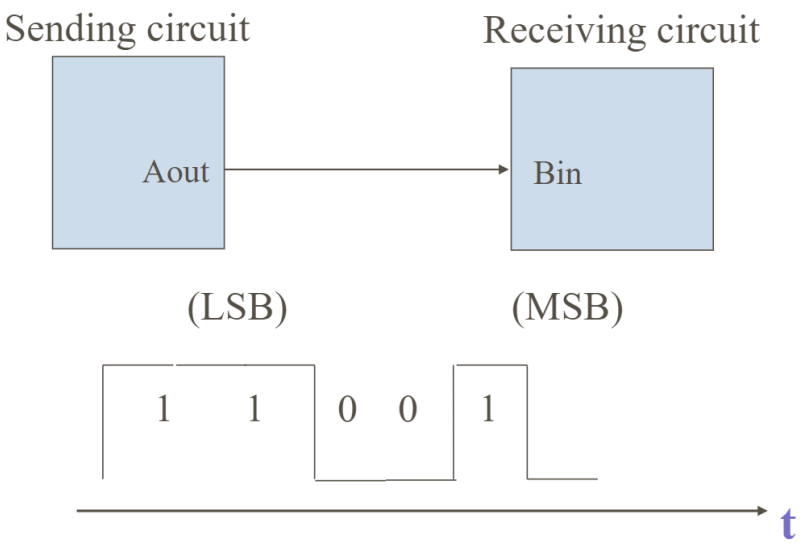


As each bit is transmitted over time, it is slower, however it is less prone to error, and is cheaper.