Electromechanical Systems

Generally, electromechanical systems are represented with wiring diagrams, with relay systems represented on ladder diagrams, with each successive rung showing the next step in logic, which will be the main focus.

Switches

Switches are used to open and close electrical circuits. Shown are the common types used:

Type of Switch	Symbol
Single Pole Single Throw (SPST) This switch is a simple on-off switch. It can be used to switch the power supply to a circuit.	
Single Pole Double Throw (SPDT) This switch can be on in both positions, switching on a separate device in each case.	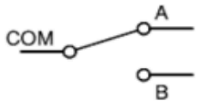
Double Pole Single Throw (DPST) It consists of two SPST switches which operate together. It may be used to switch AC power supply because it can connect/disconnect both the live and neutral connections.	
Double Pole Double Throw (DPDT) It consists of two SPDT switches which operate together. It can be used to rotate a DC motor in both CCW and CW direction.	
Rotary Switch The rotary switch makes a connection between one primary contact and any one of several contacts by turning a knob.	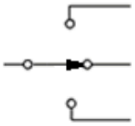

The more useful one however are push buttons, which are either normally open (NO), or normally closed (NC):

Type of Switch	Symbol
<u>Normally Open (NO) Push Button</u> An electrical connection is made (closed) between two contacts when the push button is depressed, and the connection is broken (open) when the button is released.	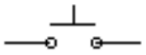
<u>Normally Closed (NC) Push Button</u> An electrical connection is broken between two contacts when the push button is depressed, and the connection is made when the button is released.	

Relays

Generally, relays comprise of a solenoid with an iron core, which can attract a movable contact. This allows an electrical signal to open and close a different circuit, that may have a different voltage across.

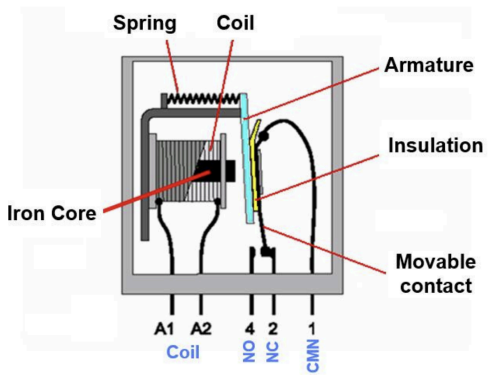

Figure 2-10: Internal structure of electromechanical relay

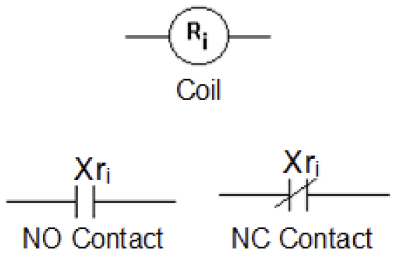

Figure 2-11: Symbol of relay in ladder diagram

Notice how depending on the output connection, a NO or NC contact can be obtained.

To notate different contacts, for a relay of number i, the Xth NO contact is labelled Xr_i, while the Yth NC contact is labelled Yr_i.

This also means that multiple relays can be connected to one armature, and the standard relay setup is to have 4 contacts to one coil, which can be either be NO or NC.

With Relays, different logic circuits can be made. One example is the Latch Circuit:

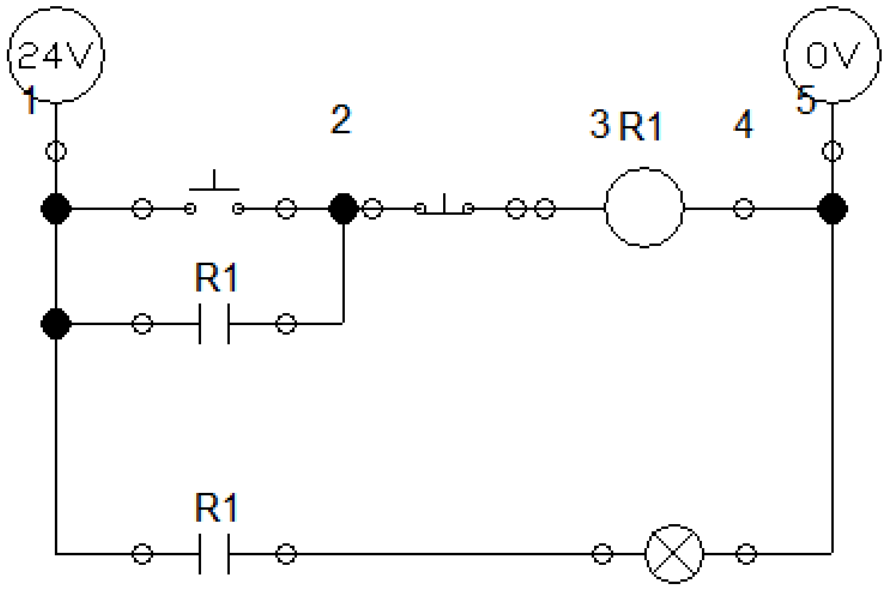

Time Delay Relay

Generally, a time delay relay activates when the coil has been held on or off for an extended period of time. The symbols are as shown:

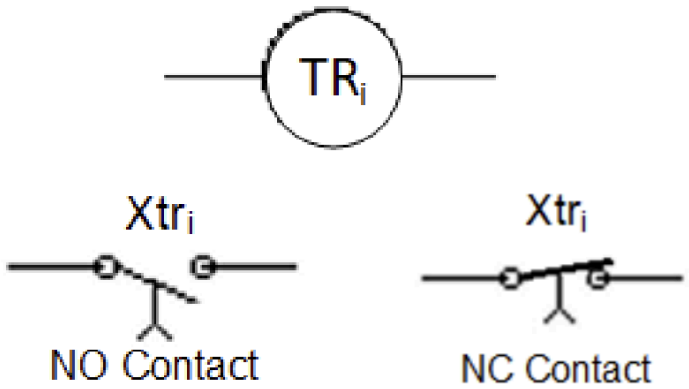

The most common and the emphasis of this module is the ON-delay relay, where soem time is needed to turn on the relay, but turns off instantly.

For example, shown is a timing circuit that only turns on after held for a certain amount of time, but turns off instantly:

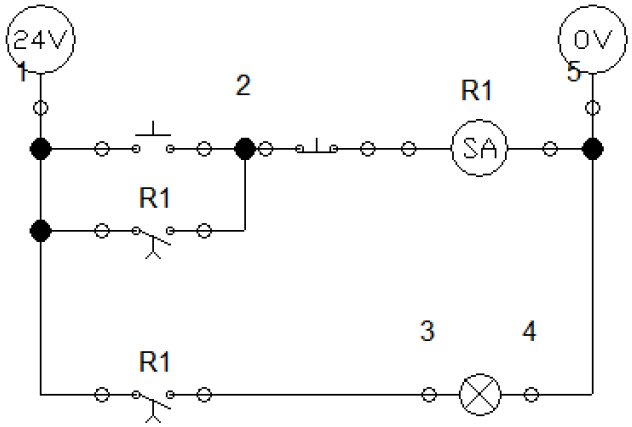

(SA IS NOT THE SYMBOL AAAAAAAAAAAAAAAAA)

Electro-Pneumatic Systems

Limit Switches

Recall limit switches from pnuematic systems, which measure if the piston is at a certain state. Limit switches can be in either NO or NC state, where NO state has the switch at the bottom of the contact, while NC has the switch above the contact.

Note that a NO switch may be closed because the piston is already triggering it in the default position, and vice versa.

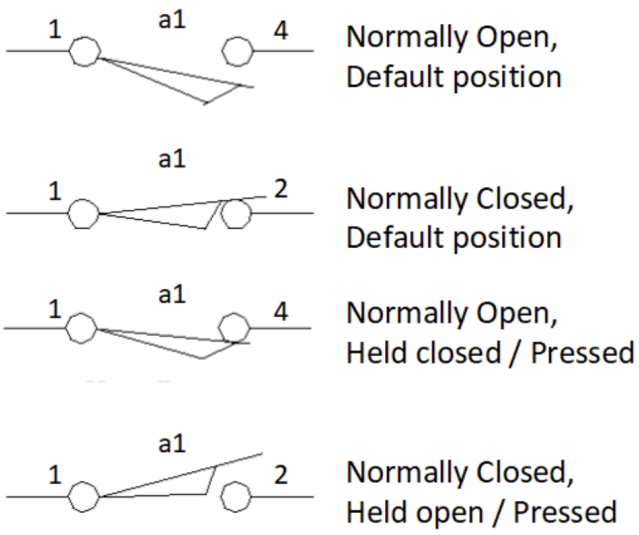

Reed Switch

Reed switches activate when a magnet is brought close to them. Hence, if the piston boss has a magnetic ring around it, it can activate a reed

switch and hence be used to detect the state of the piston. They can also be normally open or normally closed.

Figure 2-24: Reed switch with a closeup

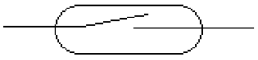

Figure 2-25: Symbol of reed switch

Solenoids & Solenoid Controlled Valves

A solenoid is a device that coverts electrical energy to mechanical, with a coil of wire. In the case of this module, linear solenoids are used.

Figure 2-28: Linear solenoid from Ledex®

Figure 2-29: Symbol for solenoid in ladder diagram

Solenoids can be used to activate pilot valves:

Direct valves usually have only one output, hence usually 3/2 valves, while pilot valves have two outputs, usually being 5/2 valves

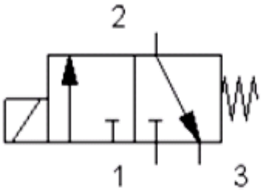

Figure 2-30: Direct operated solenoid valve

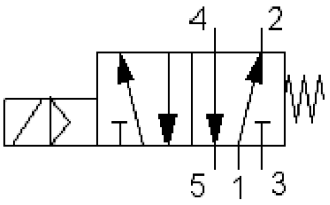

Figure 2-31: Pilot operated solenoid valve

We will be using pilot operated valves, which come in two types, spring returned/single solenoid or double solenoid:

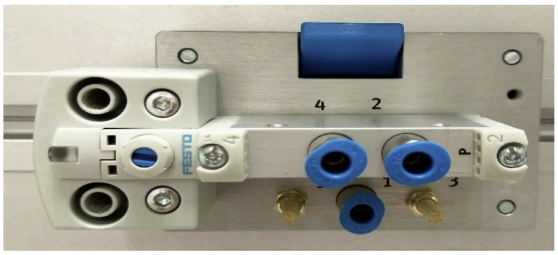

Figure 2-34: Single solenoid valve from Festo®

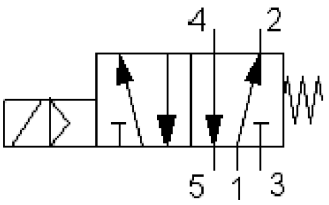

Figure 2-35: Pilot operated single solenoid valve

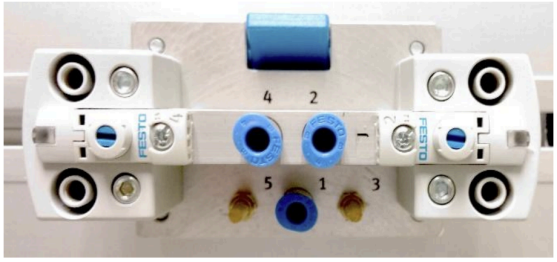

Figure 2-36: Double solenoid valve from Festo®

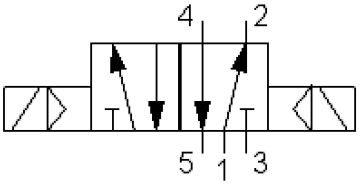

Figure 2-37: Pilot operated double solenoid valve

Pressure/Temperature/Float Switches

These switches activate when a specific pressure, temperature, or liquid level has been reached. They come in either a NO or NC state, with the switch drawn below or above the contact respectively.

Types of switches	Normally Open Contact	Normally Closed Contact
Pressure switch	N.O. Contact	N.C. Contact
Temperature switch	NO contact	NC contact
Float switch	NO contact	NC contact