Facing, Roughing, Finishing & Grooving

Spindle & Surface Speed

Recall spindle and surface speed, and the formula relating the two:

$$V_c = \frac{\pi D n}{1000}$$

where n is the spindle speed in rpm, and Vc is the surface speed in m/min.

Usually, a constant surface speed is preferred for consistent surface finish for each tool pass.

However, for operations like turning and grooving, where the diameter changes, the spindle speed will need to change to maintain a constant surface speed.

$$V_c = kDn,\ k = \frac{\pi}{1000}$$
$$\frac{V_c}{kD} = n$$
$$\therefore n \propto \frac{1}{D}$$

This means that to maintain a constant surface speed, as the diameter decreases closer to 0, the spindle speed may reach speeds higher than the motor's limit (MAZAK: 5000rpm).

Hence, we limit the spindle speed to 2500rpm to prevent this, which is sufficient for turning and facing operations that taper towards the center.

In the G code, we program it like so:

```
G50 S2500 (G50 sets max spindle speed, S2500 sets the nu
merical value itself)
G96 S90 M03 (G96 sets constant surface speed, CSS, at 90
m/min, clockwise)
```

Facing

Recall that facing is machining the end of a workpiece, and with CNC machines, is roughed out with multiple passes (if needed) then finished at the end with one pass.

again, G96 should be used for a consistent surface finish

OD Roughing

OD Roughing is typically done in multiple passes, with an 80 deg insert.

Typically, we leave more stock on the diameter, or X (0.8mm), than on the length, or Z (0.1mm).

OD Finishing

OD Finishing is done in one pass to form the correct OD contour, with a 55 deg insert for better surface finish, and a higher surface speed with lower feedrate.

Typically, finishing inserts have a working range that allow lower feed rates but lower depth of cuts, while roughing inserts allow higher depth of cuts, but only at higher feed rates.

OD Grooving

Normally, Grooving is used for creating circular channels or pathways around the workpiece.

Depending on the width and depth of the groove, different grooving methods may be used:

When the groove width is less than the depth, multiple grooving, also called step over grooving, is used.

When the groove width is more than the depth, plunge grooving is used.

If the bar is weak or slender, ramping is used.

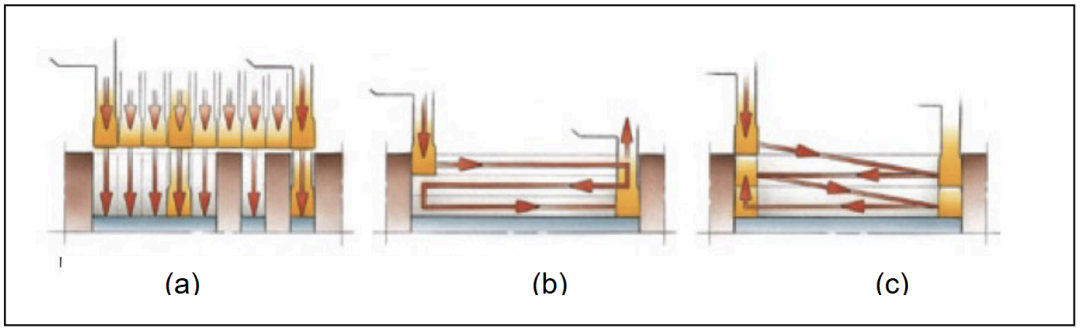

Figure 13: (a) Multiple grooving, (b) Plunge turning and (c) Ramping

Typically, groove turning is done afterwards to finish a groove:

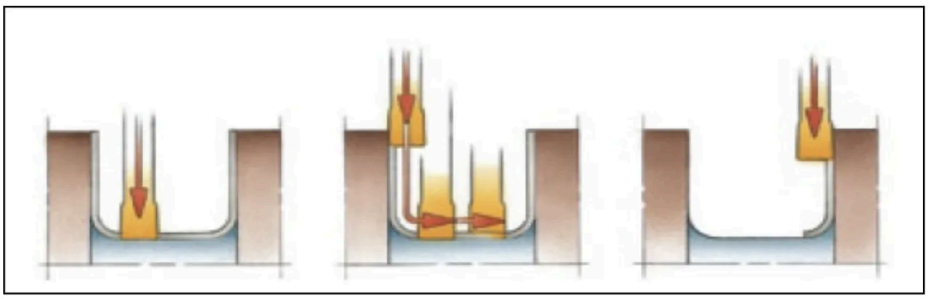

Figure 14: Finish machining a wide groove

Insert Clamping System

Inserts are clamped onto the insert holder like so:

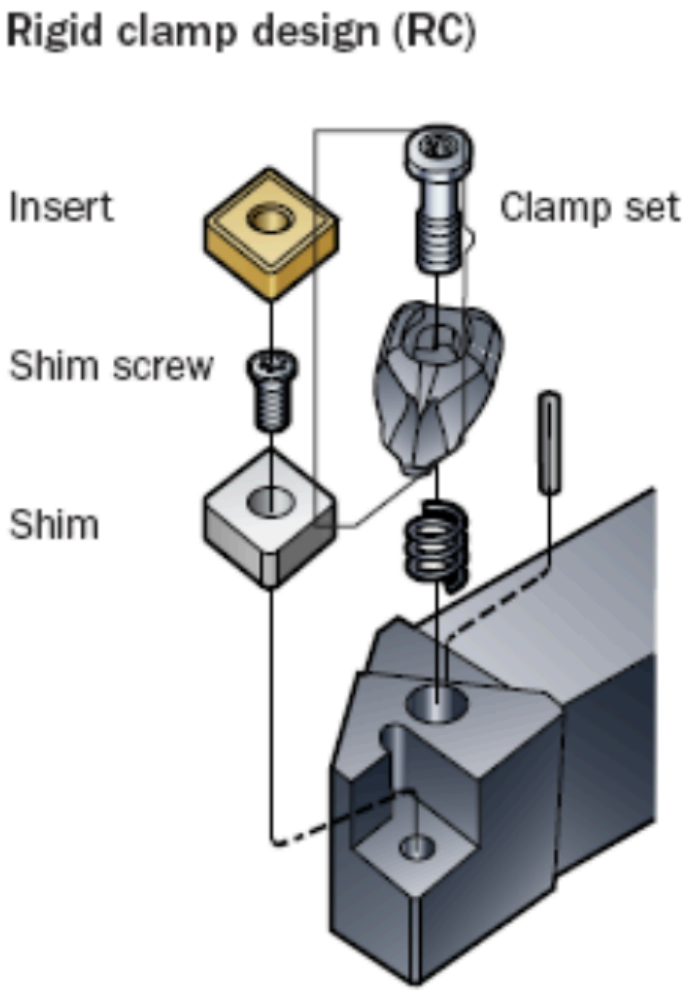

The shim is held in place by a shim screw, and prevents damage to the insert, while the clamp set is used to securely hold the insert in a stable manner, while also ensuring repeatability when clamping different inserts.

Chip Breaking

Recall that chips are formed during turning due to the shear forces that the cutting tool causes on the stock. Especially for turning, these chips are long and continuous, which could lead to nesting when the chips are excessively long and get caught in the turning stock.

Hence, chip breaking is important to prevent nesting from occuring.

Chips can break from:

its own brittleness, breaking on its own

breaking against the tool

breaking against the workpiece

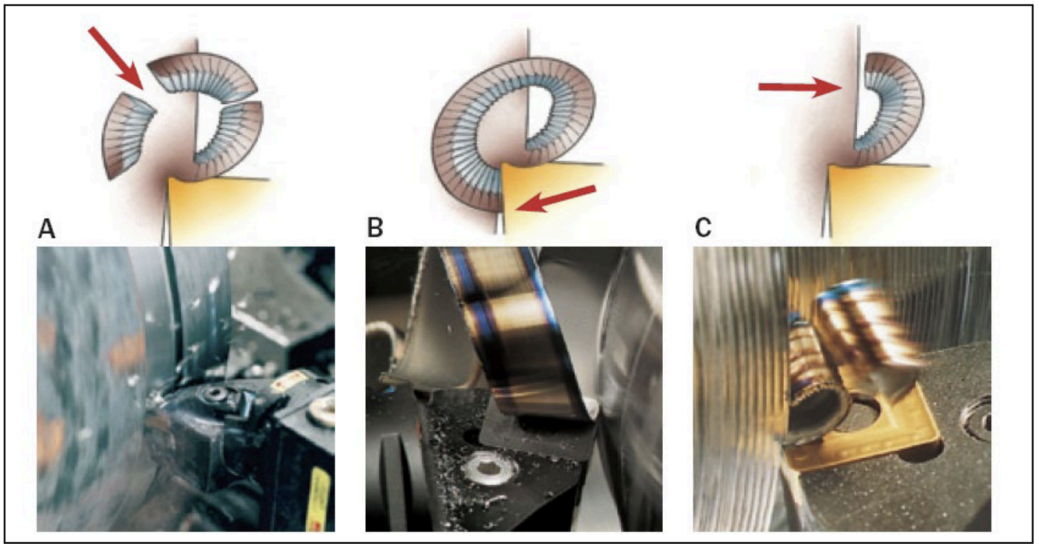

Figure 4: Three ways for chip to break

The type of chip breaking is determined from the tool & insert geometry, and the cutting data (feedrate, rpm, etc.)

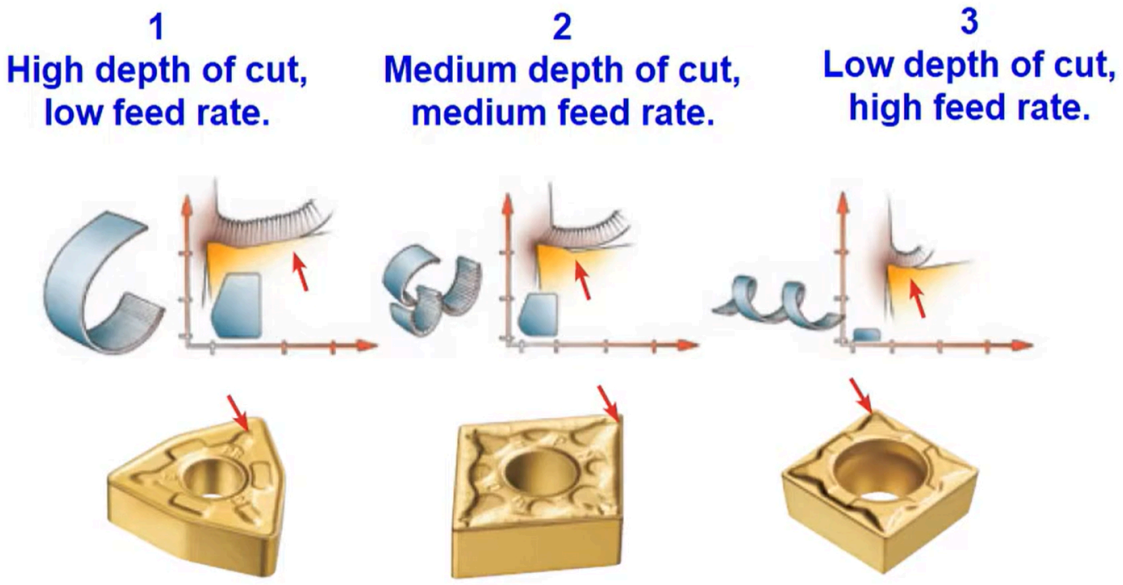

Tool Nose Radius & Surface finish

As said before, having a tool nose radius improves the life of the tool and surface finish. However, a higher tool nose radius causes more vibration as more of the tool tip rubs against the workpiece, despite having a stronger tool.

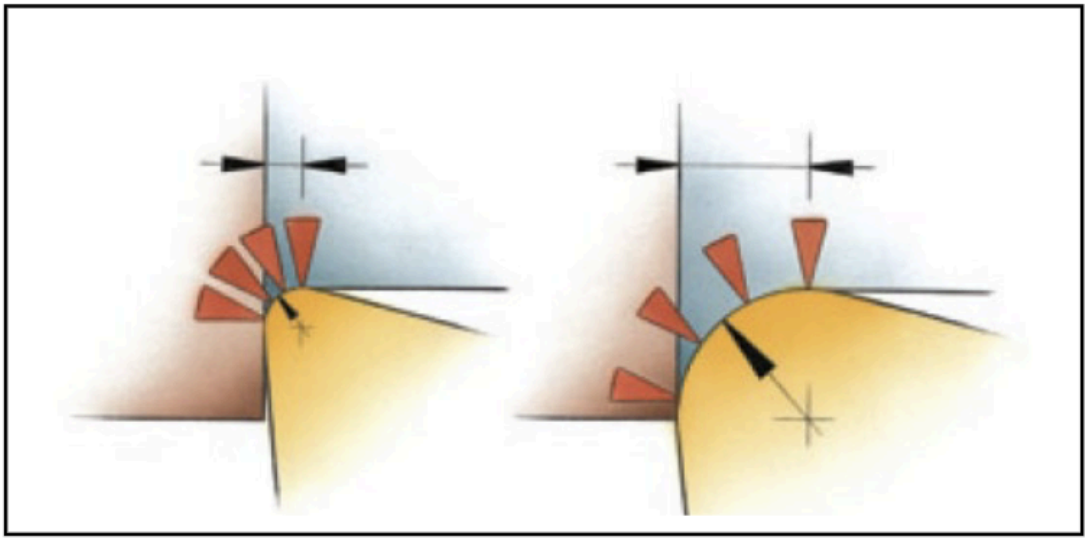

Hence, we usually use 0.4mm or 0.8mm for the tool nose radius.

We can also compute the roughness based on the tool nose radius, as:

$$R_{max} = \frac{f_n^2}{8r_\varepsilon} \times 1000$$