Gear Selection

Gears are use to transmit power via toothed wheels, causing the direction to be flipped but the torque or speed to be changed. If two gears have different diameters, the smaller one is called the pinion while the other is called the wheel.

Typically, gears are made of cast iron or steel, however brass, bronze and nylon may be used too.

Gear Profiles

The gear teeth profile must be controlled to allow proper power transmission and consistent ratio. Typically, there are two types, cycloidal and involute, with involute being more common for its easier manufacturing and can work together with multiple gears of the same module.

An involute curve can be thought of as a taut rope being wrapped around a circle, and as the circle rotates, the rope unwinds and the taut end of the rope has its motion traced out.

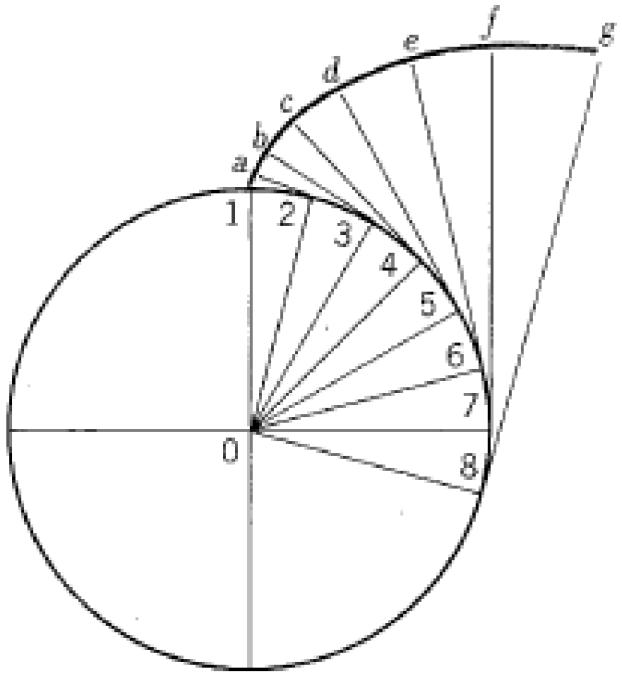

The resulting involute curve is the exact same profile gear teeth uses, as the way it is defined allows two gears to have consistent contact points as they mesh.

- Types of Gears
  - The types of gears can be grouped by the shaft positions, being
  - Parallel Shafts
    - Parallel shaft gear transmission typically provide maximum power transfer and high efficiency
    - Spur Gears
      - Standard types of gears; wide usage
      - Easy to produce
      - noisy and used at lower speeds to avoid vibrations
    - Helical Spur Gears
      - helical gear teeth provide more contact and thus less noise & vibrations, and higher strength
      - helical teeth cause axial forces which need bearings to support.
      - speed ratio not to exceed 10:1
    - Herringbone Gears
      - consists of two mirrored helical gears attached together to form V shaped teeth
      - opposite teeth cancel axial forces, allowing high speed, quiet and higher loads
      - harder to manufacture
    - Rack & Pinion
      - converts linear to rotational motion, or vice versa
  - Intersecting Shafts
    - Bevel Gears
      - Allows power flow around corners
      - Gear teeth cut straight; easy manufacture
      - speed ratio not to exceed 1:4
    - Helical Bevel gears
      - higher strength, contact area and durability
      - lower noise and vibrations

harder to manufacture

Non intersecting Shafts

Worm & Wheel Gears

high speed reduction

high contact area provides smooth motion

speed ratio not to exceed 70:1

Hypoid Gears

similar to bevel gears but slight offset from axes, with screw as driver

combines rolling of bevel gears with sliding of worm gears

stronger, quieter and can provide higher speed reduction ratio

sliding of teeth potentially reduces efficiency

larger helical angle of driver/pinion makes it stronger

Skew Gears

for adjacent shafts

small tooth contact reduces max possible load

can be back driven

Involute Gear Metrics

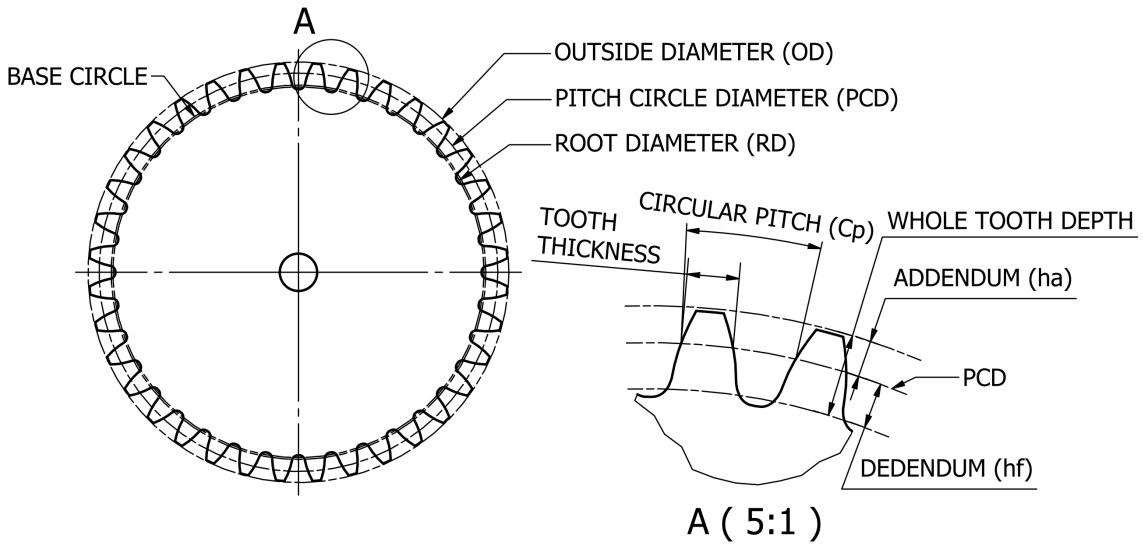

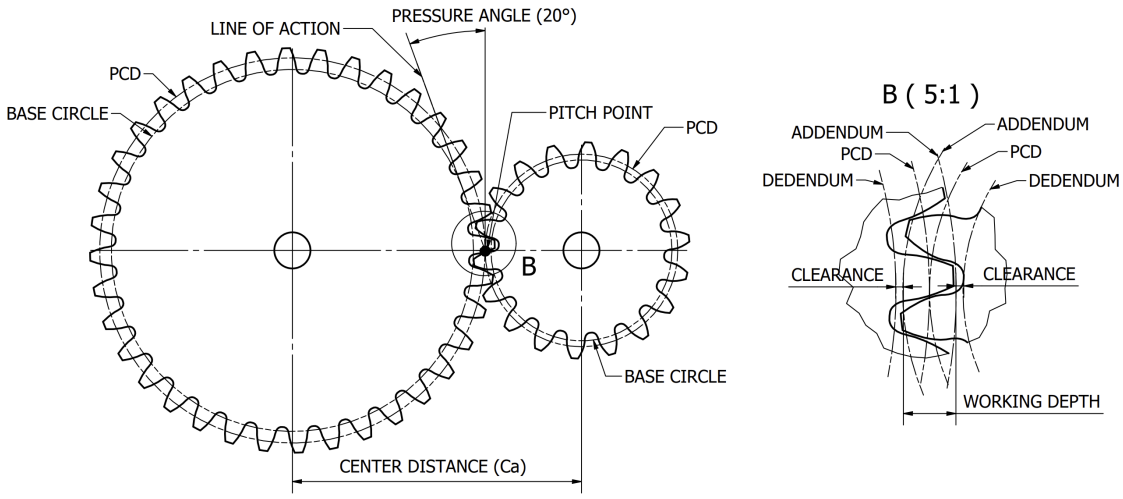

PCD, OD, RD

PCD: diameter of acting cylinder that transmits power by friction

OD: largest diameter from the end tip of the tooth

RD: diameter from the roots of the teeth

Center distance

center distance between two meshed gears

Module

an indication of tooth size in the system; two gears of the same module mesh perfectly together.

Circular Pitch

circumferential distance between gear teeth, measured along the PCD

tooth thickness

circumferential distance of walls of gear teeth along PCD

Addendum, Dedendum

addendum: height of gear teeth above PCD

dedendum: height of gear teeth root below PCD

tooth depth

addendum + dedendium; the total height of a gear tooth

Pitch Point

point of contact between gear teeth

Base Circle

circle who's involute curve is constructed for the gear tooth profile

Line of Action

line tangent to base circle that passes through pitch point

Pressure angle

angle between line of action and common tangent of gear PCDs, standarised to 20 deg.

clearance

for meshed gears; the gap between the tip of one gear tooth to the root of the other

working depth

the sum of each tooths addendums; the amount of engangement between the gears.

All the formula used to calculate gear metrics are shown:

$$PCD = mT \Rightarrow m = \frac{PCD}{T}$$

$$h_a = m$$
$$h_f = 1.25m$$
$$OD = PCD + 2h_a$$
$$RD = PCD - 2h_f$$
$$whole\ tooth\ depth = h_a + h_f$$

$$C_p = \pi m = \pi \frac{PCD}{T}$$
$$tooth\ thickness = \frac{1}{2} C_p = \frac{1}{2} \pi m$$

$$C_a = \frac{1}{2}(PCD_{driver} + PCD_{driven})$$

$$clearance = h_f - h_a = 0.25m$$
$$working\ depth = 2h_a = 2m$$

Gear Trains

Recall that gear ratio is

$$GR = \frac{\text{Driven teeth}}{\text{Driver Teeth}} = \frac{T_2}{T_1}$$

for two gears where gear 2 is driven by gear 1. the speed ratio, is equal to the gear ratio, being

$$SR = \frac{\text{Driver Speed}}{\text{Driven Speed}} = \frac{N_1}{N_2}$$

The gear ratio and speed ratio are equal quantities, as power is equally transmitted between both gears

For a series of idler gears,

$$GR = \frac{T_{driven}}{T_{driver}}$$

aka the idler gears do not play a role in the GR, only the direction of rotation.

For compound gears, say gears 2 and 3 are compound gears with gear 1 driving gear 4,

$$GR = \frac{T_4 T_2}{T_3 T_1}$$

or in general if the gears are labelled in order from 1 to K,

$$GR = \frac{\prod T_{even}}{\prod T_{odd}}$$