Casting Processes

Casting is the process of pouring molten metal into a mould cavity to obtain specific shapes.

Casting Process Classification

These processes can be split into if the mould is used only once or is reused.

Expendable Mould Casting Process:

Expendable mould means that the mould is used only once, then broken to remove the casting, and has to be remade to remake the part. This causes a lower rate of production.

Processes like Green Sand Casting, CO2 Moulding, Investment Casting and Shell Moulding are examples, which will be further talked about (except Shell Moulding).

The main similarity is that these processes use sand or ceramic powder to form the mould, however with different methods to hold the mould together.

Multiple-use Mould Casting Process:

Multiple use mould means the mould can be reused, increasing production rate.

Processes like Permanent Mould Casting, Pressure Die Casting and Centrifugal Casting are examples, the main one being talked about is Permanent Mould Casting.

These processes use tool steel to make the mould, with different ways on filling the mould.

Green Sand Casting

Mould & Preperation

Green Sand casting uses a mould of silica sand(~88%), water(~3%) and bentonite clay (~9%). When mixed, the mould acts as a binding agent to hold itself together.

The mould needs to have sufficient refractoriness (withstand high temp without breaking down), to withstand 650C for Al, or 1500C for steel. The mould must also have high permeability (ability for gas to permeate the sand) so that gases in the mould cavities can leave the mould, preventing them from being trapped in the metal, which may causing blowholes and other defects. The mould also has to be strong to prevent the mould from breaking, however should not harden excessively so that the sand can be removed after casting.

Pattern

Green Sand casting also requires a pattern, a replica model of the casted object, made out of wood(cheaper, less durable) or metal (more expensive, more durable)

The pattern is usually split into two halves (or more) so that multiple mould cavities are made to remove the mould easily.

The pattern is usually made larger than the part needed(aka allowance), to account for shrinkage, to be machined away, or is tapered to prevent damaging the mould during removal.

For hollow parts/parts with holes, we use cores, to take up the empty space of the hole, to create a cavity/hole in the cast.

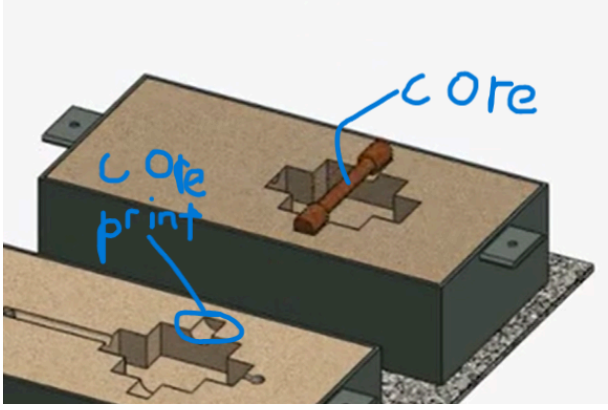

These cores are made with either silica sand or via CO2 process. The core is held in place by the core print, an extra protrusion to support the core as shown above.

Process

1. Two halves of the pattern are used to make the drag and cope. Sand is sieved to ensure good surface finish, as it covers the pattern with sufficient thickness. The sand is rammed and compacted until level.
2. The cope is prepared similarly with the other half of the pattern, as well as sprue for pouring metal and the riser
3. Patterns, sprue and risers are removed.
4. Place any cores into the mould cavity if needed, then put the drag and cope together and pour molten metal in the mould.
5. After the metal has cooled, break the sand mould, to obtain the cast for machining or surface finishing.

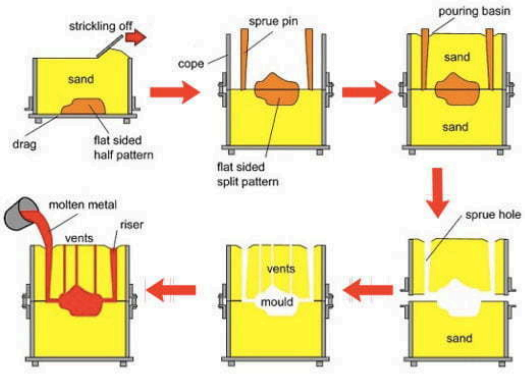

Gating System

Other than the casting mould cavity, there are also other tubings to better form the cast. This system is called the gating system.

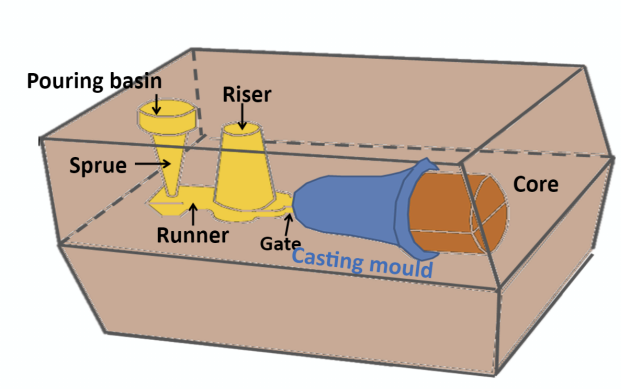

Pouring Basin/Sprue: metal is poured through this to fill the cavity. The sprue is slightly tapered to allow gases to escape.

Runner: Lets metal flow to the gate and thus the casting mould, and also to trap impurities.

Riser: To allow excess metal poured in to flow back to the casting mould (reverse flow) to compensate for shrinkage as metal cools.

(not depicted) Vents: small holes to increase permeability, allow more gases to escape.

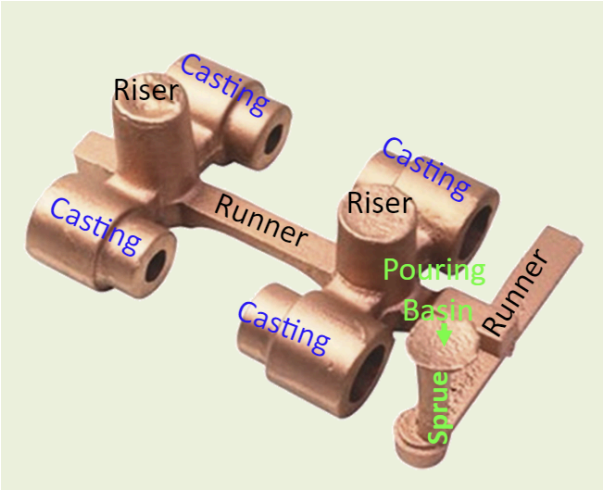

The final product looks like this, with the main cast produced with other protrusions from the sprue, runner and riser.

Advantages:

Sand casting is cheap to operate, and works with many metals and alloys, like steel or aluminium

Disadvantages:

It gives a poor surface finish, and has low dimensional accuracy.

CO2 Casting

Mould & Preparation

The mould is made with sand and a solution of sodium silicate, before being rammed to level and compact the mixture. CO_2 is then introduced, reacting with the silicate to form silica gel. The resulting silica gel is very hard and strong, and its reaction is very quick, thus production rate (of moulds) is quite high

This process can be used for strong moulds and also cores which do not need a lot of tapering, as it is less likely for the removal of cores/mould to damage the strong silica gel.

However, the sand cannot be recycled unlike green sand casting, making it more costly.

Process

The process is similar if not identical to green sand casting.

Advantages:

As said, it can produce strong moulds and cores fast, with reduced tapering.

Advantages of green sand casting still apply

Disadvantages:

The sand cannot be recycled, making it more costly.

Disadvantages of green sand casting still apply, however surface finish is better.

Investment Casting

Mould & Preparation

A wax pattern has to be made first, by using injection moulding into a metal die or rubber mould

Afterwards, multiple patterns are attached to a wax sprue, forming a wax tree. The wax tree is then coated in a ceramic slurry (with a fine primary refractory layer first to provide a good surface finish) to form a ceramic shell around the wax. This is repeated until the desired thickness, before allowing the ceramic to set.

Afterwards, the assembly is dewaxed by using an autoclave/furnace at 300C to drain the wax, before being fired in a furnace at 1000C to burn out any remaining wax and to harden the ceramic.

This kind of mould is called ceramic shell mould, which is mainly used for large components due to its slow speed.

Another way to make a mould after obtaining a wax pattern is by pouring investment slurry into a flask with the pattern, before being set for ~30mins. This process is called block mould, and is used for small intricate parts like jewelry, due to the fast speed.

Process

After the mould it obtained, the molten metal is poured into the mould.

After being cooled, the shell of ceramic/investment slurry is removed, before being machined to remove the sprue if necessary.

Advantages

Investment casting can work with almost every metal/alloy, can give good surface finishing, and has good dimensional accuracy right after casting.

Disadvantages

Very slow and expensive, impractical for large scale manufacturing.

(Pressure) Die Casting

Mould

The mould is an alloy steel mould.

This process is meant for metals with low melting points (Pb, Zn, Sn, Al, Mg, Cu) alloys

Process

There are 2 types of die casting, hot chamber and cold chamber.

Hot Chamber Die Casting

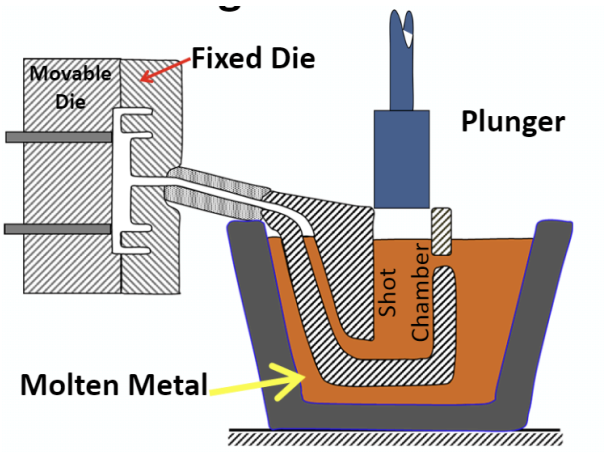

The molten metal occupies its vessel and a shot chamber.

The plunger moves down and forces the molten metal through the gooseneck and into the die. The plunger remains in the shot chamber as the metal cools in the die. After it is cooled, the plunger moves back up and the moveable die opens, so that the ejector pins can eject the part. The cycle repeats.

This process has a high production rate, however limited to low melting point metals (Zn, Pb , Sn), and cannot be used for Al, as the Al is in direct contact with the alloy steel shot chamber for prolonged periods of time, causing iron contamination.

This method also has a higher risk of trapping air in the die.

(hot chamber is also faster than cold chamber) ok

Cold Chamber Die Casting

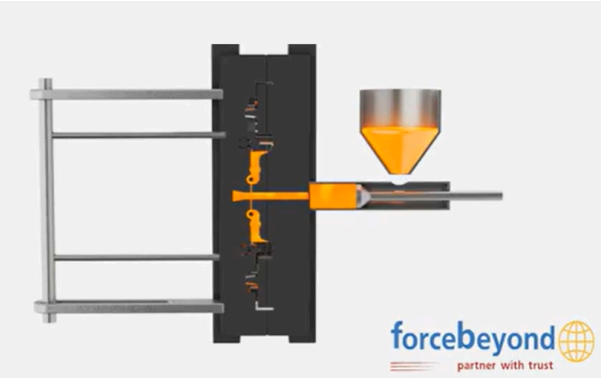

For hot chamber, the molten metal is melted and directly “connected” to the die, which causes contamination.

Cold chamber casting has a separate chamber for the molten metal (pouring aperture) and the plunger (cylindrical chamber).

The rest is similar, where the piston forces the molten metal in the die and is ejected similarly.

This method eliminates iron contamination, as the melting of the metal is in a separate chamber than the plunger, avoiding prolonged immersion. This makes this process suitable for Al, Mg and Cu.

The high injection pressure makes it less prone to pores forming (porosity) and shrinkage

Advantages:

High production rates, good for mass production of low melting point metals, also cheaper for mass production

Works well with complex shapes, thin walls or fine details

Very good surface finish and dimensional accuracy

Disadvantages

Limited to low melting point metals

Expensive facilities and tools needed

Porosity is present due to using alloy steel die, lacks permeability.

Summary Table

	Green Sand Casting	CO2 Casting	Investment Casting	Hot Chamber Casting	Cold Chamber Casting
Metal/Alloys	High m.p. metals (cast iron, Al)	High m.p. metals (cast iron, Al)	Unlimited choice of metals	Low m.p. metals (Pb, Zn, Sn)	Low m.p. metals (Al, Cu, Mg)
Mould	Silica sand, water, Bentonite Clay	Sand, Sodium Silicate + CO2 gas to harden sand	Ceramic slurry/ investment slurry	Alloy Steel	Alloy Steel

Process	Metal is poured into the pouring basin and sprue, through the runner and up the riser and into the mould cavity through the gate.	Metal is poured into the pouring basin and sprue, through the runner and up the riser and into the mould cavity through the gate.	Pattern is injection moulded and assembled. Ceramic shell is made and then dewaxed at 300C and fired at 1000C to obtain the mould. metal is poured into the mould (casting) and the ceramic shell is knocked out after cooled	A plunger forces the molten metal in the shot chamber to flow into the die and cool inside it. Ejector pins open the die to remove the cast.	Molten metal is poured from the pouring aperture to the cylindrical chamber, where a piston forces the molten metal into the die, before being cooled and ejected.
Result	Cast has poor surface finishing, low dimensional accuracy	Cast has good surface finish, low dimensional accuracy.	Cast has very good surface finishing, good dimensional accuracy.	Cast has very good surface finishing, very good dimensional accuracy	Cast has very good surface finishing, very good dimensional accuracy
Applications	Machine beds	Core prints	large components like turbine blades, or complex shapes like jewelry and implants	Al Gear boxes, oil sumps, iron soleplates, zinc toy cars (anything that may need to be produced at large scale)	Al Gear boxes, oil sumps, iron soleplates, zinc toy cars (anything that may need to be produced at large scale)
Advantages	Cheap, wide range of alloys,	Fast production rate, less taper needed, cheap as well	Very wide range of metals, good surface finish and dimensional accuracy, works well with large or intricate parts.	Very fast production rate, good surface finishing and dimensional accuracy	Prolonged immersion is avoided, high injection pressure reduces pores and shrinkage in the cast.
Disadvantages	poor surface finish, low dimensional accuracy	sand used cannot be recycled + similar disadvantages of sand casting	Process has slow production rate and is expensive	Limited to low m.p. alloys, does not work with Al due to iron contamination, high risk of trapping air in the cast.	Some porosity is still possible due to alloy steel mould

				Equipment is also expensive	