ME2105 Topical Practice Problems

Circuits I, II, III

1. Which one of the following statements about practical voltage sources is FALSE? [ME2104]
    a. A practical voltage source can be modelled as an ideal current source in parallel with an internal resistance.
    b. An ideal voltage source has zero internal resistance
    c. For a practical current source, the current drawn by a resistive load at the output increases when the resistive load decreases.
    d. For a practical voltage source, the power dissipated by a resistive load at the output increases when the resistive load decreases.

2. Two resistances, R1 and R2, are connected in parallel. Given that R1 = 100Ω and that the current through R1 is twice the value of the current through R2, what is the value of R2? [ME2104]
    a. 50Ω
    b. 100Ω
    c. 200Ω
    d. None of the above

3. What is the equivalent resistance of the following circuit network? [ME2104]

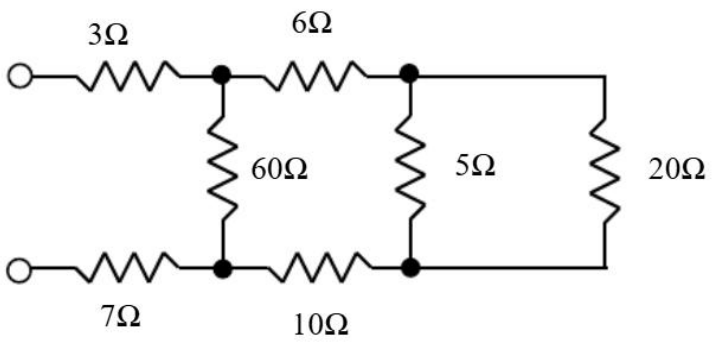

    a. 15Ω
    b. 25Ω
    c. 70Ω
    d. None of the above

4. What is the equivalent resistance of the following semi-infinite ladder network? [ME2104]

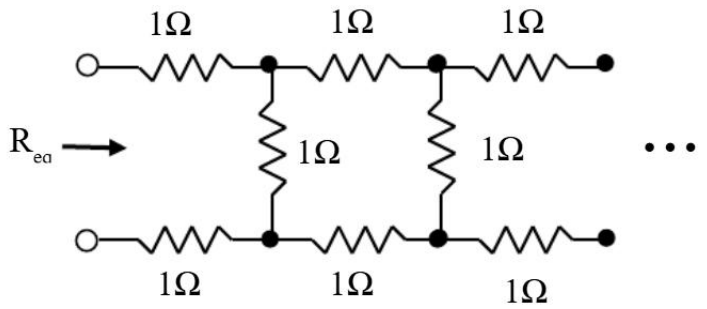

   a. Infinite resistance
   b. 2.73Ω
   c. 3Ω
   d. None of the above

5. The figure below shows part of an electrical circuit where we are interested in measuring the power profile of an electrical device. A voltmeter and ammeter are connected as shown. Which of the following statements is true? [EG1112]

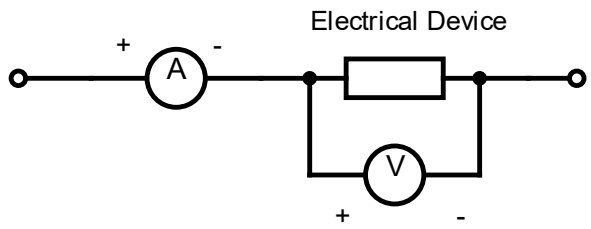

   a. If both meters give positive readings, the electrical device is supplying power
   b. If both meters give negative readings, the electrical device is consuming power.
   c. If the ammeter gives a positive reading and the voltmeter gives a negative reading, the electrical device is consuming power.
   d. If the ammeter gives a negative reading and the voltmeter gives a positive reading, the electrical device is consuming power.

6. For the resistor network shown below, only the upper bound of the resistance is known. Which of the following gives the best approximation of the equivalent resistance R_{AB}? [EG1112]

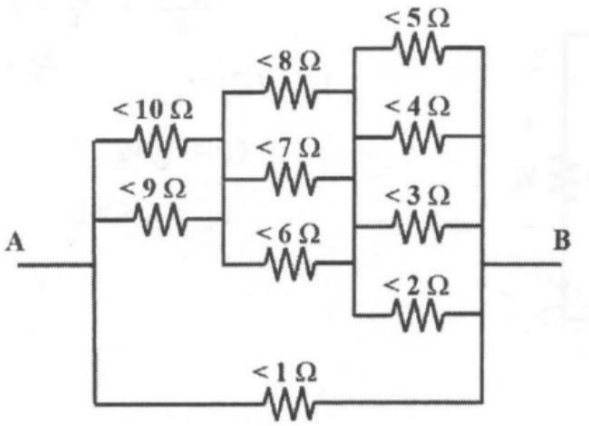

   a. $0\Omega \leq R_{AB} < 1\Omega$
   b. $1\Omega \leq R_{AB} < 5\Omega$
   c. $5\Omega \leq R_{AB} < 10\Omega$
   d. $10\Omega \leq R_{AB} < 30\Omega$

7. For the circuit shown below, the ammeter reads 1A when the switch is closed. Determine the ammeter's reading when the switch is open. [EG1112]

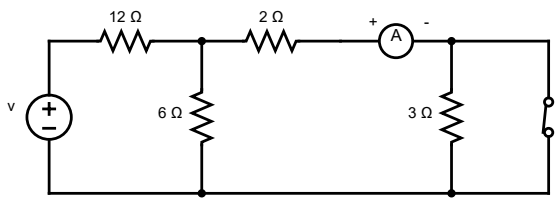

   a. 0.33A
   b. 0.67A
   c. 1A
   d. 1.33A

8. Consider the circuit shown below. Find the voltage and current readings at the ideal voltmeter and ammeter respectively. [ME2104]

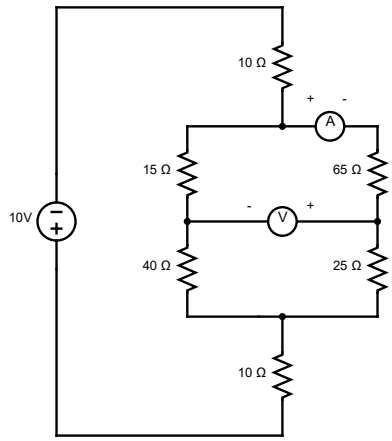

9. Consider the circuit shown below with an unknown voltage source v_s.
   a. An ideal ammeter is connected across terminals AB such that its positive probe is at A. If the reading is 0.16A, find v_s.
   b. The ideal ammeter is replaced with a voltmeter and has its positive probe at A. If the reading is 5.6V, find v_s. [ME2104]

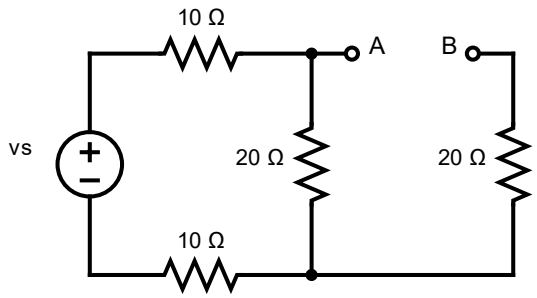

10. What is the equivalent resistance of the circuit as seen from terminals A-B, given that $R_1 = 12\Omega, R_2 = 10\Omega, R_3 = 20\Omega, R_4 = 12\Omega$? [ME2104]

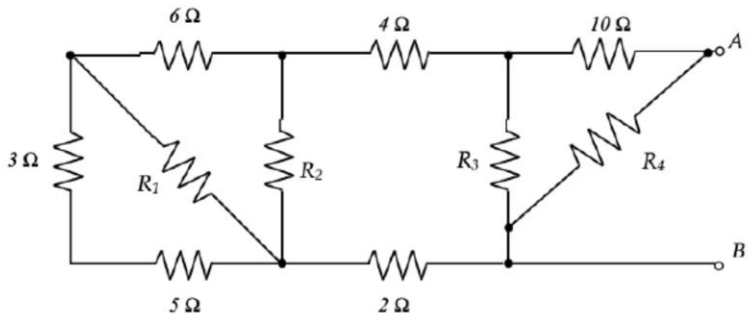

11. Find the Norton Equivalent of the circuit shown below from the terminals AB. Hence find the maximum power that can be delivered to a resistive load connected at AB. [ME2104]

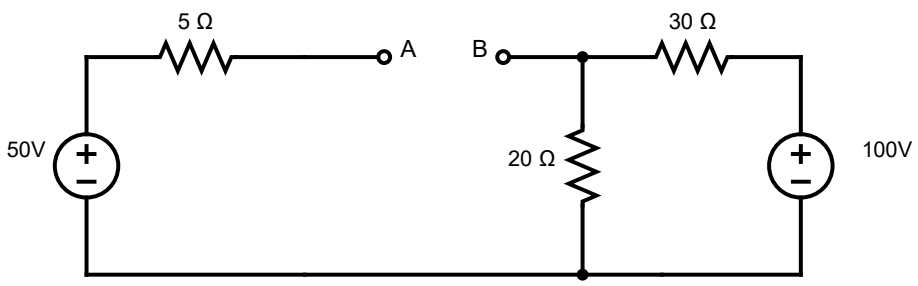

12. Consider the circuit below and given that $R_1 = 12\Omega, R_2 = 10\Omega, R_3 = 20\Omega, R_4 = 40\Omega, R_5 = 20\Omega$, find v_x and the power supplied by the dependent source. [ME2104]

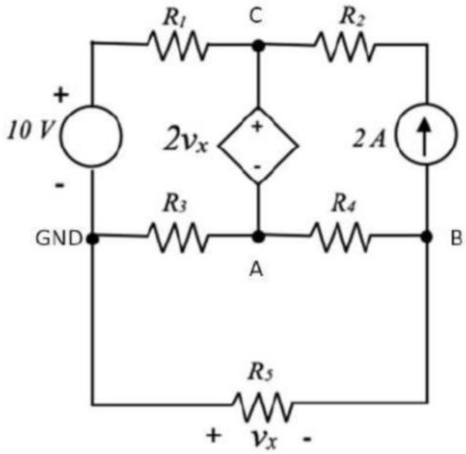

13. For the circuit shown, find I_x given that $R_x = 5\Omega, i_y = 3A$. [ME2104]

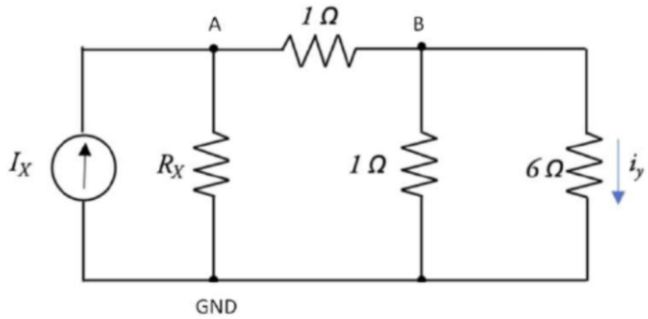

14. Find the Thevenin equivalent resistance for the circuit given that $V_s = 5V, R_1 = 6\Omega, R_2 = 3\Omega$. [ME2104]

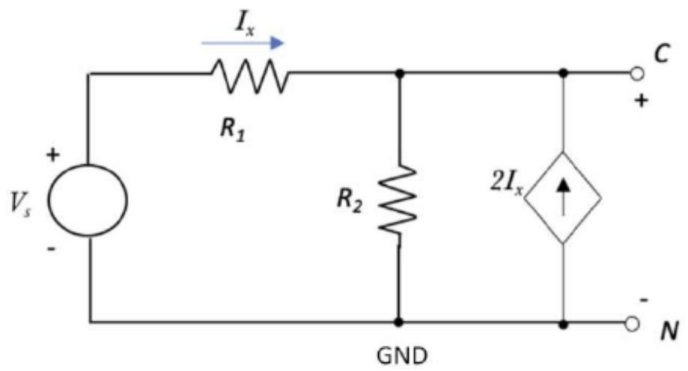

15. Given the circuit below, what will be the voltmeter reading assuming that both meters are ideal? [ME2104]

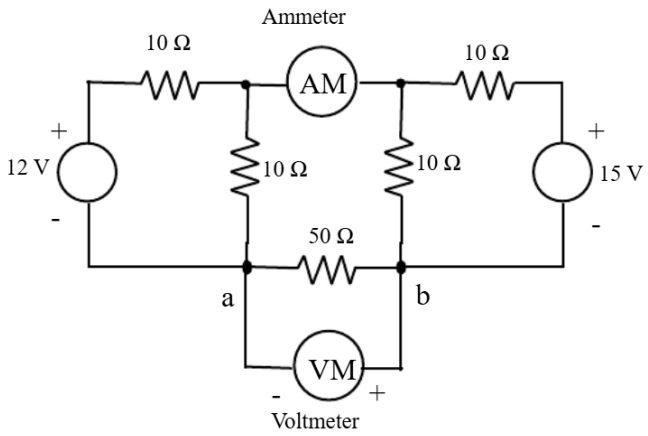

16. For the circuit below, it is given that $R_1 = 5\Omega, I_x = -0.5A$. Hence, find v_x. [ME2104]

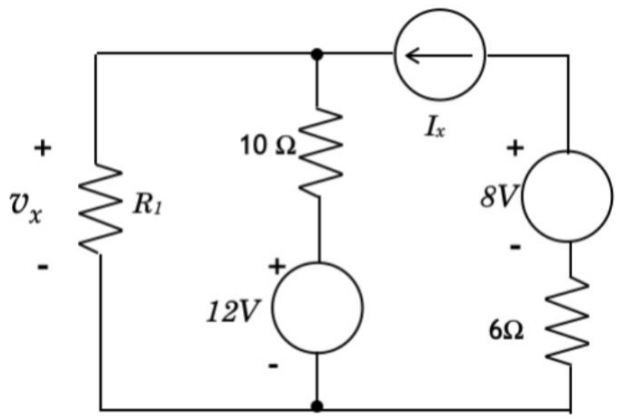

17. Given the circuit below, find the Thevenin equivalent circuit. [ME2104]

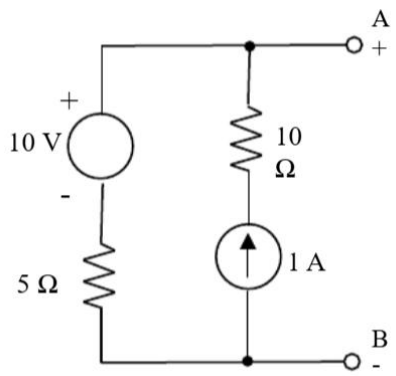

18. Find the necessary resistance R in the circuit below to provide the maximum power transfer to the load resistor, and hence find the power dissipated. [ME2104]

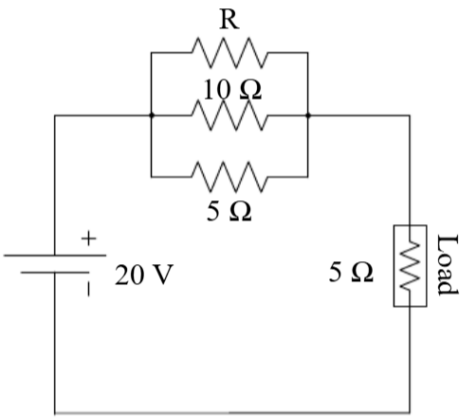

19. It is given that $V_1 = 10V, V_2 = 5V, V_3 = 20V$ and that $R_1 = 3\Omega, R_2 = 4\Omega, R_3 = 3\Omega, R_4 = 1\Omega, R_5 = 3\Omega, R_6 = 1\Omega$. Find the voltage drop V_{AD}. [ME2104]

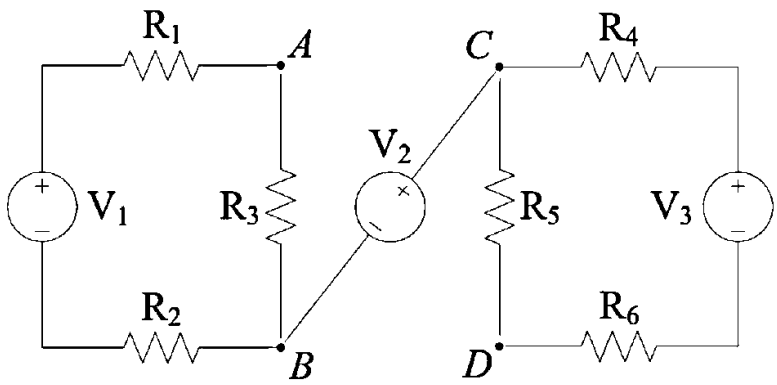

20. Given the following circuit, find the Thevenin's open circuit voltage and the Norton's short circuit current. [ME2104]

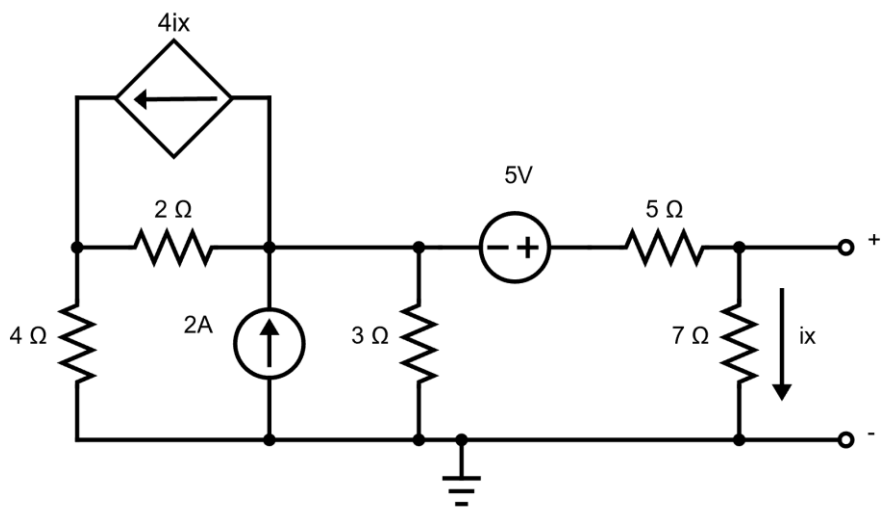

Sensors & Signal Conditioning

1. A hall effect sensor is a device... [ME2104]
    a. whose output voltage depends on magnetic field.
    b. that uses sound reverberation in a hall to measure frequency.
    c. whose resistance changes with pressure
    d. used for measuring intensity of light.

2. Which of the following statements is incorrect? [ME2104]
    a. A photo-resistor is also known as a light-dependent resistor.
    b. The resistance of a photo-resistor increases with the amount of light incident on it.
    c. Photo-resistors cannot be used for applications where the intensity of light changes rapidly.
    d. Photo-resistors are less light sensitive than diodes.

3. When measuring the output voltage of an analog sensor, ... [ME2104]
    a. we must use a low impedance measurement device
    b. the input impedance of the measurement device does not matter
    c. we must use a measurement device with an input impedance equal to the output of the sensor
    d. we must use a high input impedance measurement device.

4. When measuring a quantity, it is common to take repeated measurements and then take an average. Why? [ME2104]
    a. The precision of the average is better than that of individual measurements.
    b. The average has a lower bias than individual measurements.
    c. Repeated measurements allow us to detect human error; automated measurements need not be repeated.
    d. The variance of the measurements is increased by averaging.

5. The resistance of a NTC thermistor... [ME2104]
    a. increases with temperature.
    b. is unaffected by temperature.
    c. decreases with temperature.
    d. may increase or decrease with temperature.

6. For the circuit shown below, if $V_{BD} = 0$, what is the resistance of X? [EG1112]

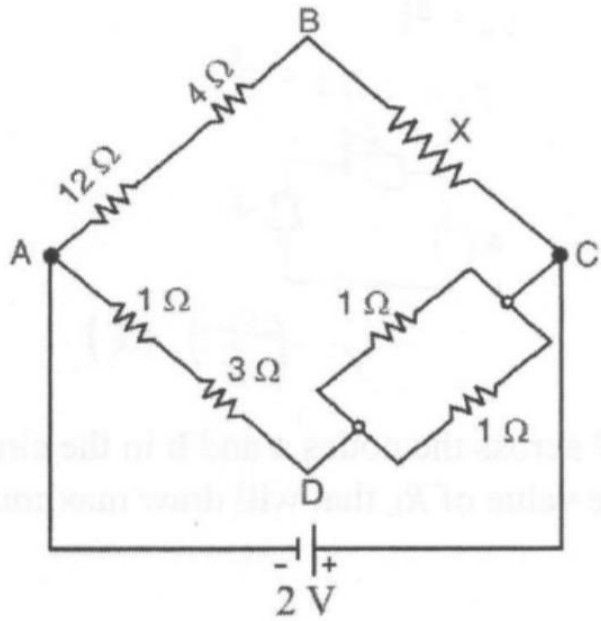

   a. 4Ω
   b. 2Ω
   c. 3Ω
   d. 6Ω

7. A load cell/force sensor produces an open-circuit voltage of 200μV for a full scale applied force of 10kN and has a Thevenin resistance of 1kΩ. The sensor terminals are connected to the inputs of an amplifier. What is the minimum input resistance of the amplifier so that the system's sensitivity is reduced by less than 1% by loading? [Hambley]

8. Three flow rate sensors each make 10 measurements of a known flow rate of $1.5m^3/s$, with the results shown in the table below, all in m^3/s.

Trial	Sensor A	Sensor B	Sensor C
1	1.5	1.73	1.552
2	1.3	1.73	1.531
3	1.4	1.73	1.497
4	1.6	1.73	1.491
5	1.3	1.73	1.500
6	1.7	1.73	1.550
7	1.5	1.73	1.456
8	1.7	1.73	1.469
9	1.6	1.73	1.503
10	1.5	1.73	1.493

   a. Which instrument is the most precise? Explain. [Hambley]
   b. Which instrument has the best accuracy? Explain. [Hambley]
   c. Which instrument has the best resolution? Explain. [Hambley]

9. Consider a liquid level sensor that has a Thevenin resistance that varies randomly from 20kΩ to 1MΩ. It is also given that the short circuit current of the sensor is proportional to the measurand (liquid level).
    a. What type of signal conditioning unit is required? (this is weird) [Hambley]
    b. Suppose we allow for up to a 1% change in overall sensitivity due to the changes in the sensor's resistance. Determine the specification of the input resistance of the signal conditioner. [Hambley]

10. For the resistor network shown, it is give that $R = 10\Omega, R_{AB} = 100\Omega, V_S = 10V$. Find the effective resistance between the terminals of the voltage source V_s. [ME2104]

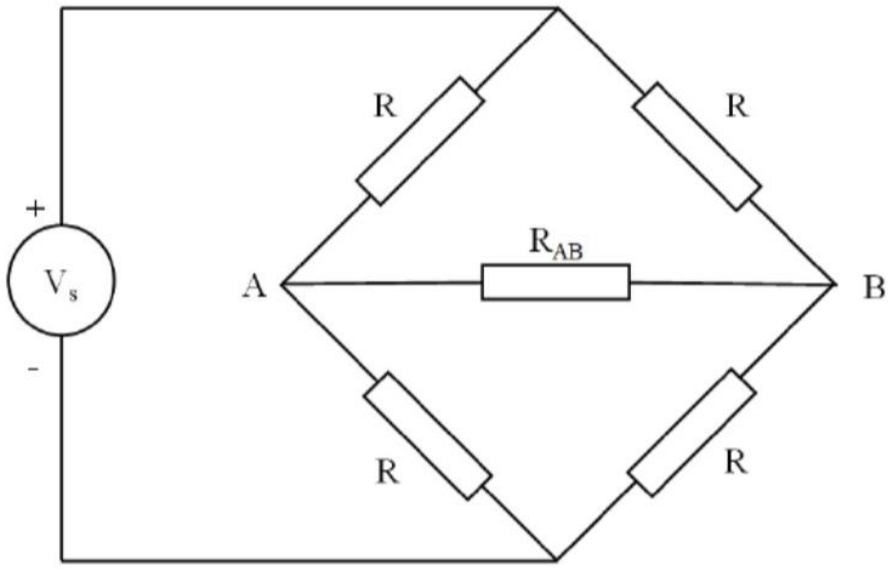

11. For the Wheatstone bridge shown, $V_p = 10V, R_s = R_0 = 100\Omega, R_1 = 10\Omega$.
    a. What is the voltage V_{AB}? [ME2104]
    b. If a galvanometer was placed across AB, what would a drop in the resistance R_s be observed as? [me]
    c. If R_s is no longer just 100Ω and is instead $R_s = f(T) = R_0 + R_\delta(T)$, write an expression for V_{AB} in terms of R_0 and $R_\delta(T)$. [me]

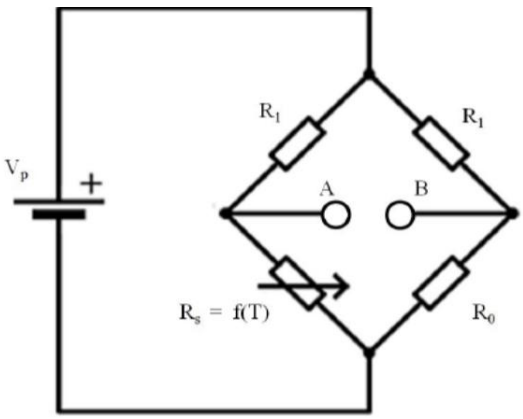

12. Consider the Wheatstone bridge shown below.

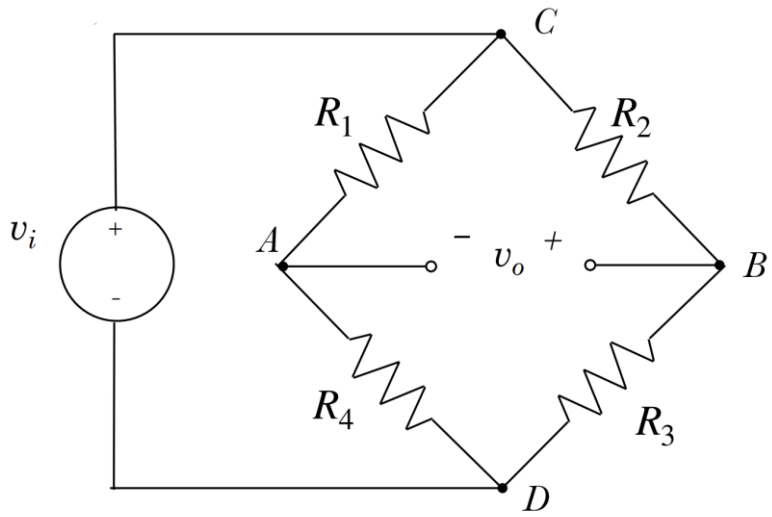

It is given that $v_i = 10V, R_1 = R_2 = 10k\Omega, R_3 = 5932\Omega$, and that an ammeter of internal resistance 5kΩ is placed across BA.

a. What value of R_4 is needed to balance the bridge? [Hambley]
b. Suppose that the value of R_4 is now 1Ω higher than the value found in (a). Find the current through the detector. [Hambley]

13. If a thermocouple used in a standard two-junction thermocouple configuration with a $100°C$ reference temperature, what measurement temperature would correspond to a measured voltage of 30mV? [Alciatore]

14. Using a thermocouple with a fixed $0°C$ reference temperature, how much would the voltage reading change if the measurement temperature changes from $10°C$ to $120°C$? [Alciatore]

15. A strain gauge of 120Ω is mounted onto a diameter 6mm steel bar along the axial direction. When the bar is loaded with a 200N tensile load, the gauge resistance increases by 0.01Ω. Given that the Young's Modulus of steel is 200GPa, find the gauge factor of the strain gauge. [Alciatore]

16. A steel bar of Young's Modulus 200GPa and diameter 10mm is loaded in tension with an axial load of 50kN.
    a. Determine the stress experienced by the bar. [Alciatore]
    b. If a strain gauge of 2.115 and resistance 120Ω is mounted on the bar axially, what is the change in resistance (ΔR) of the gauge from the unloaded state to the strained state? [Alciatore]
    c. The strain gauge is now placed in branch 2 (replaces R_2) of the Wheatstone bridge shown.

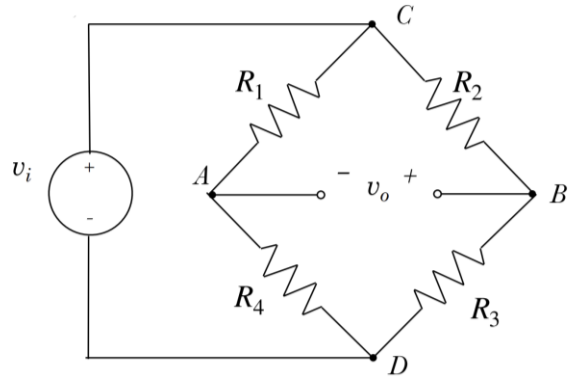

The other three branches have the same base resistance, that is $R_1 = R_3 = R_4 = 120\Omega$. Determine the output voltage in the strained state. [Alciatore]

17. Consider a strain gauge in the form of a long thin wire of length L and cross sectional area A before strain is applied. When strain is applied, the length increases slightly to $L + \Delta L$ and the area is reduced so that the volume occupied by the wire is constant. Assume that $\frac{\Delta L}{L}$ << 1 and that the resistivity of the wire is constant throughout. Determine an expression for the gauge factor. [Hambley]

18. Consider the Wheatstone bridge shown, where R_1, R_2, R_3 and R_4 are strain gauges to be placed on a cantilever beam loaded with a point load at its free end.

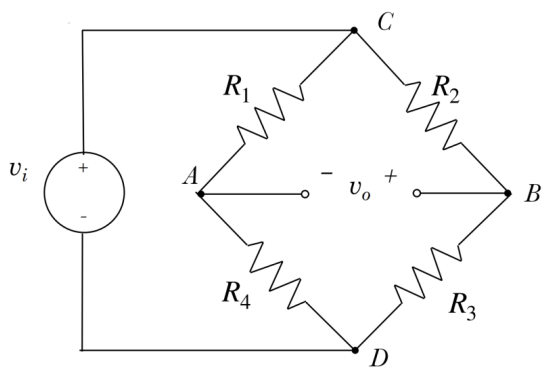

Say the strain gauges were initially set up with $R_1$and R_3 placed at the underside of the cantilever, and gauges R_2 and R_4 are placed on the upper side of the cantilever. What would happen if R_1 was swapped with R_4? (In other words, what would happen if R_3 and R_4 are now on the underside of the cantilever while R_1 and R_2 are now placed on the top of the cantilever?) [Hambley]

Capacitors & Inductors

1. As a fully discharged capacitor in the RC circuit shown reaches its maximum charge after the switch is closed for a long time, which of the following statements is FALSE: [ME2104]

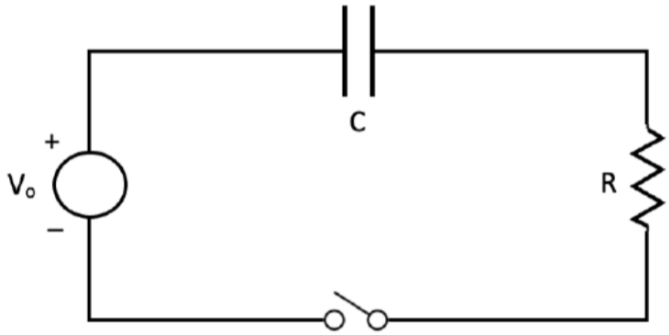

   a. The voltage across the capacitor is at its maximum
   b. The voltage across the resistor is zero.
   c. The sum of the voltages across the capacitor and resistor is equal to the initial voltage across the resistor just after the switch is closed.
   d. The sum of the voltages across the capacitor and resistor is equal to the initial voltage across the capacitor just after the switch is closed.

2. Which of the following is true about a parallel plate capacitor? [EG1112]
   a. Its capacitance is proportional to the density of its conducting plates.
   b. Its capacitance is proportional to the distance between the plates.
   c. Its capacitance is proportional to the area of the conducting plates.
   d. The capacitance depends on the permeability of the insulating material.

3. A 1000pF capacitor was initially charged to a certain voltage and connected to an inductor of 1mH, as shown. [EG1112]

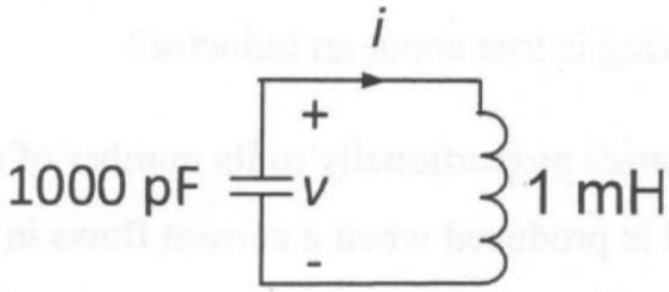

   If the peak current in the circuit is 1A, what is the peak voltage in the circuit?
   a. 1V
   b. 10V
   c. 100V
   d. 1000V

4. What is the energy stored in the inductor and capacitor in the DC circuit below in steady state? [EG1112]

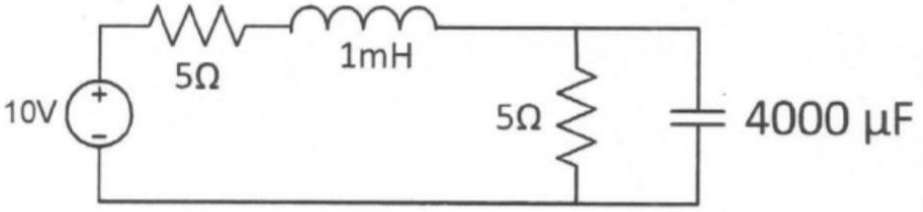

   a. $E_{ind} = 0.5mJ, E_{cap} = 0J$
   b. $E_{ind} = 0J, E_{cap} = 50mJ$
   c. $E_{ind} = 50mJ, E_{cap} = 5mJ$
   d. $E_{ind} = 0.5mJ, E_{cap} = 50mJ$

5. Which of the following is true about an inductor? [EG1112]
   a. Its inductance varies proportionally to the number of turns
   b. An electric field is produced when current flows in the inductor.
   c. The energy stored in the inductor is proportional to the square of the current in it.
   d. Inductor current can change rapidly from one value to another if voltage is changed suddenly.

6. An unknown capacitor was charged to 10V and discharged through a 10Ω resistor. It took 5s for the capacitor to discharge. How long would it take to discharge the same capacitor if it was charged to 100V and discharged through the same 10Ω resistor? [EG1112]

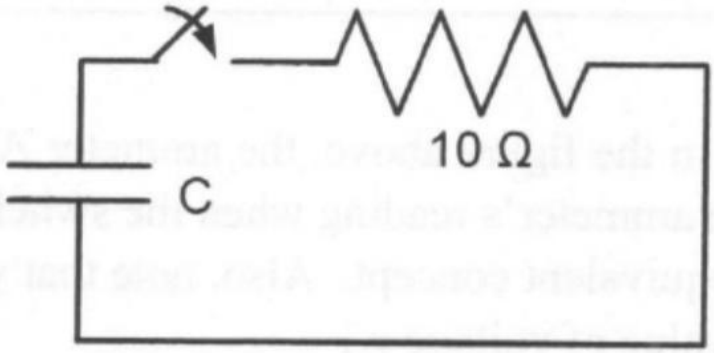

   a. 50s
   b. 5s
   c. 0.5s
   d. 2.5s

7. A 60μF capacitor is connected in series with a 40kΩ resistor. If the capacitor is initially uncharged, determine the voltage across the resistor at $t = \tau$ when the circuit is connected to a 100V DC source at $t = 0$. [ME2104]

8. Consider the circuit below with $V_o = 30V, R_1 = 4.7k\Omega, R_2 = 2.2k\Omega, \mathrm{R}_3 = 6.2k\Omega, C = 10\mu F$. It is given that the switch is held at position 1 for a long time and is shifted to position 2 at $t = 0$. Find the time taken for the capacitor to fully discharge. [ME2104]

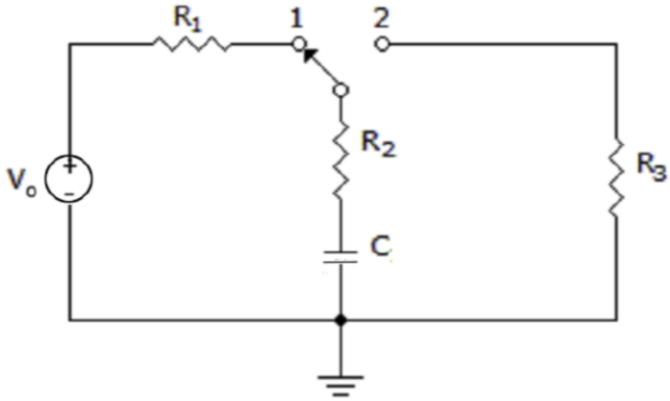

9. The circuit below has $V = 30V, R = 8.5k\Omega, C = 2.5\mu F$.
   a. Find the time constant τ. [ME2104]
   b. It is given that the capacitor is fully charged before the switch is shifted to the other position at $t = 0$. Find the total power dissipated through R as C fully discharges. [me]

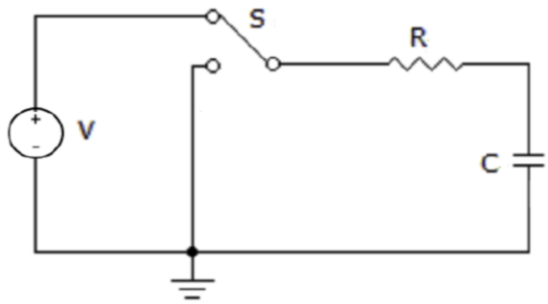

10. The circuit below has its switch closed for a long time before being opened at $t = 0$. Given that $V_o = 15V, L = 10\mu H, R_1 = 5\ \Omega, R_2 = 2k\Omega$,
    a. Find V_2 before the switch is opened [ME2104]
    b. Find V_2 after 10ns. [me]

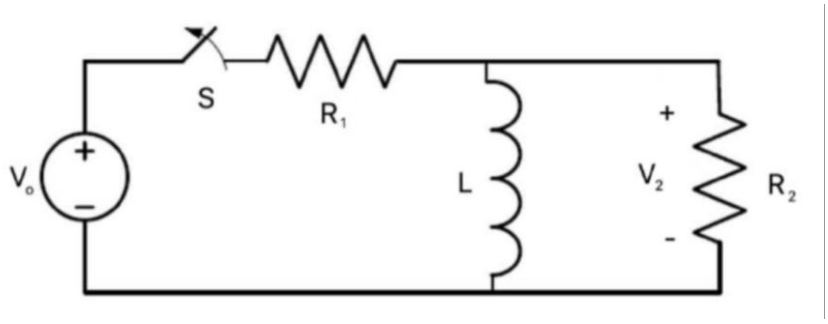

11. Consider the circuit below, where $V_o = 14V, R_1 = 120\Omega, R_2 = 820\Omega, R_3 = 560\Omega, L = 100mH$. It is also given that the switch is closed at position 2 for a long time before being switched to position 1 at $t = 0$.
    a. After how long can we assume that the current in the given circuit has reached its maximum value? [ME2104]
    b. Once the circuit has reached its maximum current, the circuit is switched back to position 2. How much time has elapsed since the start when the inductor has fully discharged? [me]

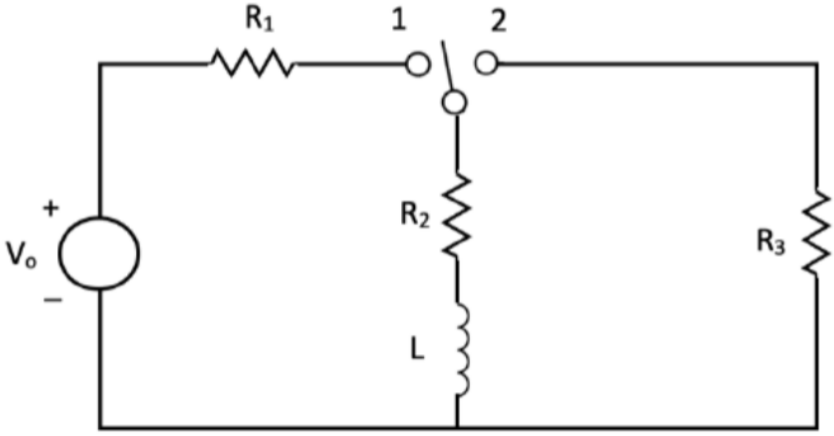

12. It is given that the circuit below has $C = 1mF, R = 1k\Omega$, with the capacitor initially full charged with charge Q. Determine the charge 1.00s after the switch is closed in terms of Q.

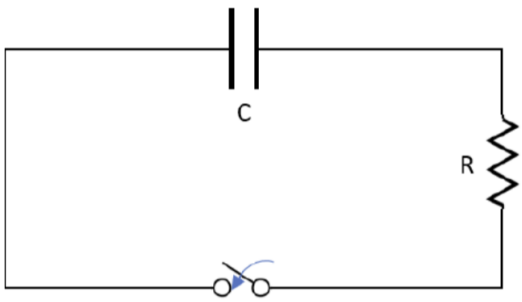

13. Find the instantaneous voltage over the 2H inductor when the switch is closed at $t = 0$. Assume the switch was open for a long time prior to $t = 0$. [ME2105]

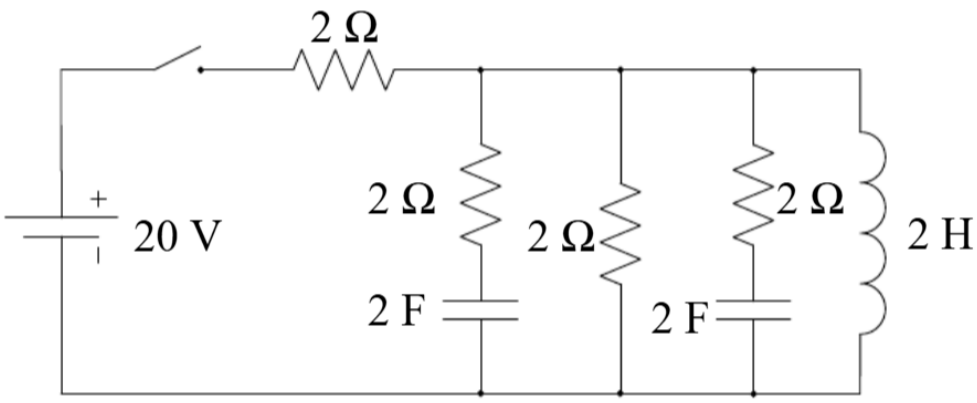

14. It is given that $V_o = 10V, R_1 = 8\Omega, R_2 = 4\Omega, C = 0.5F, L = 2H$, and the switch has been open for a sufficient amount of time. Determine the instantaneous current through R2 at $t = 0$. [ME2105]

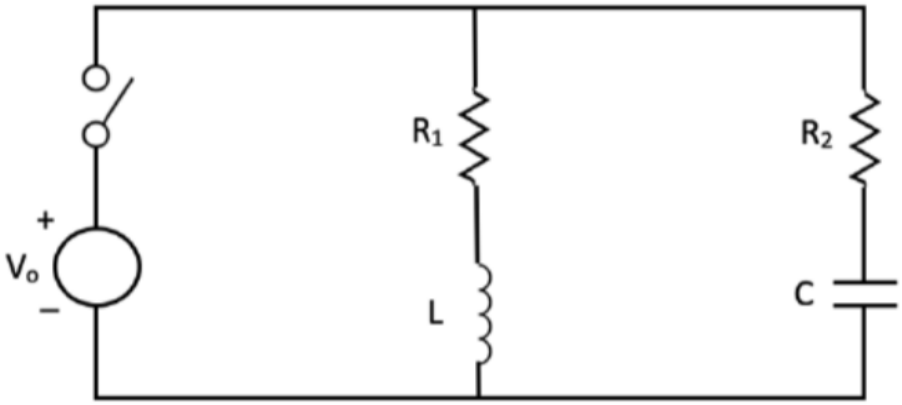

Operational Amplifiers

(all op amps to be assumed as ideal, unless stated otherwise)

1. Determine the voltage gain from the circuit shown below. [Hambley]

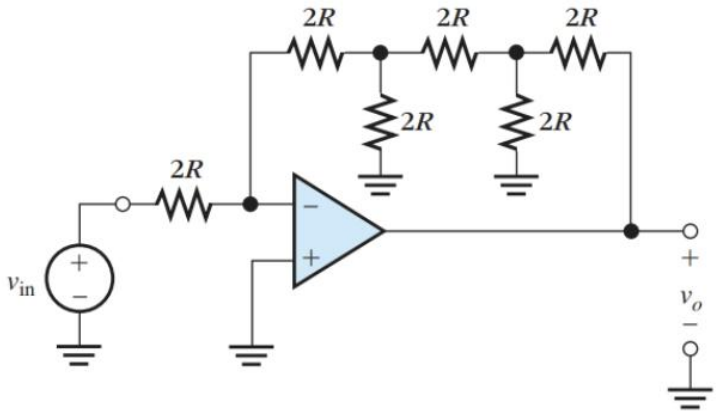

2. Find v_o for the circuit shown below. [Hambley]

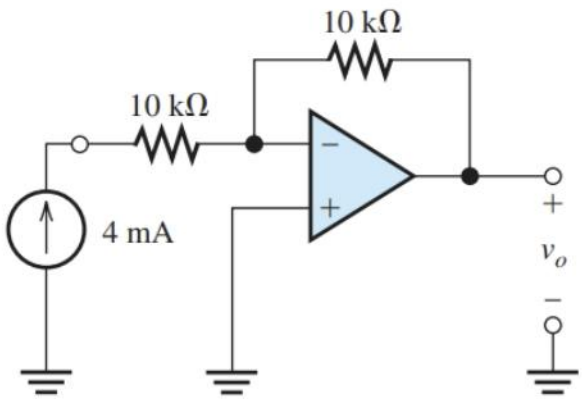

3. Find v_o for the circuit shown below. [Hambley]

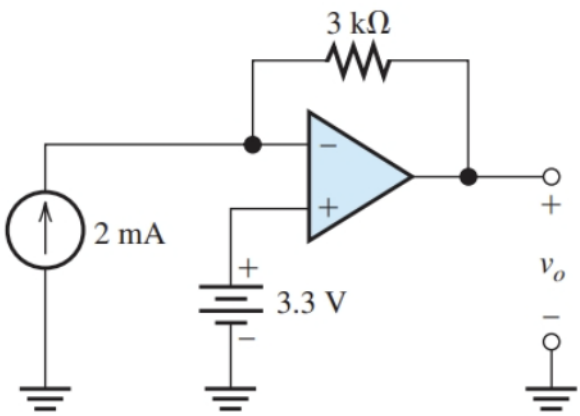

4. Find v_o for the circuit shown below. [Hambley]

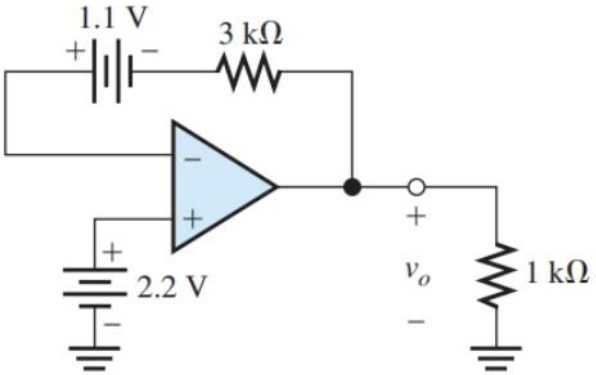

5. Find v_o for the circuit shown below. [Hambley]

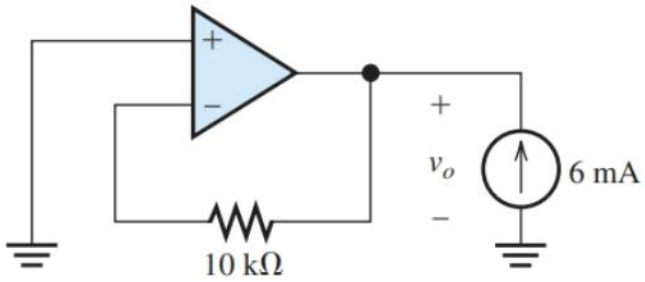

6. Find v_o for the circuit shown below. [Hambley]

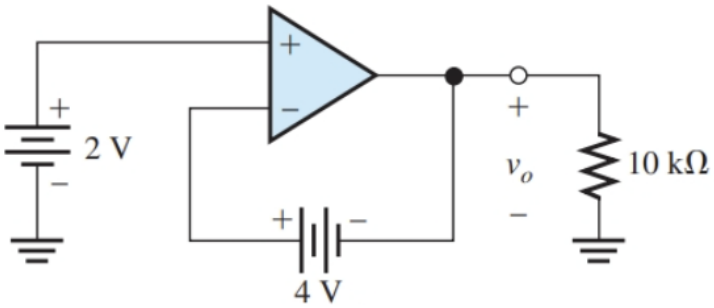

7. Find an expression for i_o and the output impedance to the load for the circuit shown below. [Hambley]

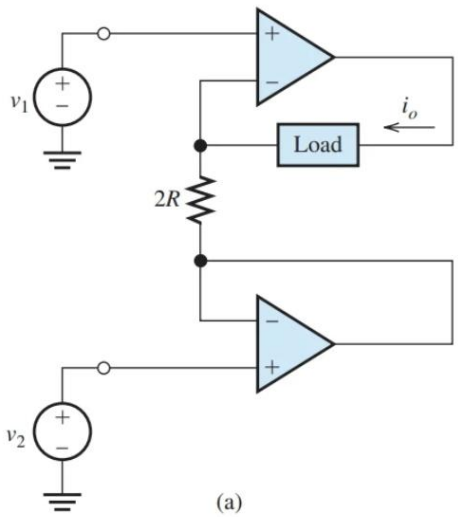

8. Find an expression for i_o and the output impedance to the load for the circuit shown below. [Hambley]

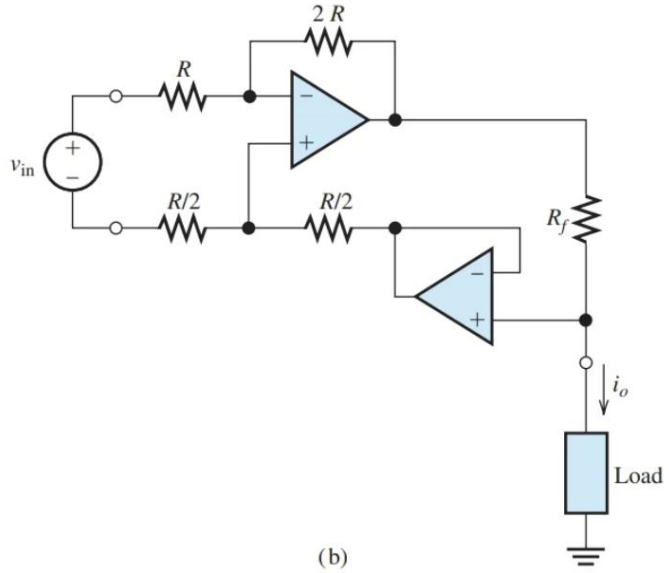

(b)

9. Consider the circuit shown below. Find an expression for i_o, the input impedance, and output impedance seen by R_L. [Hambley]

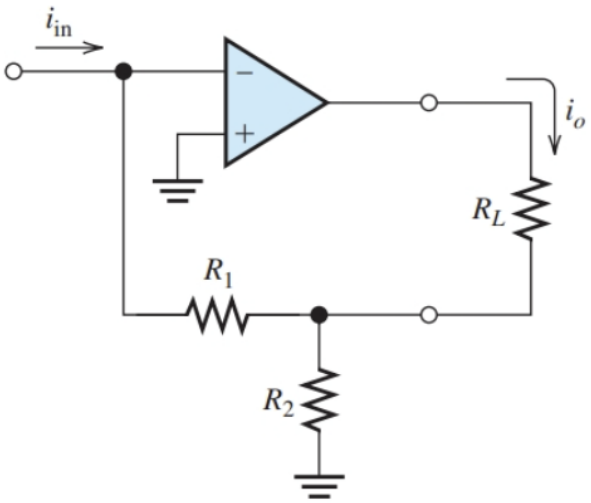

10. Given the circuit shown below, find an expression of the voltage gain as a function of T, where T represents the position of the potentiometer along its length, with $0 \leq T \leq 1$. [Hambley]

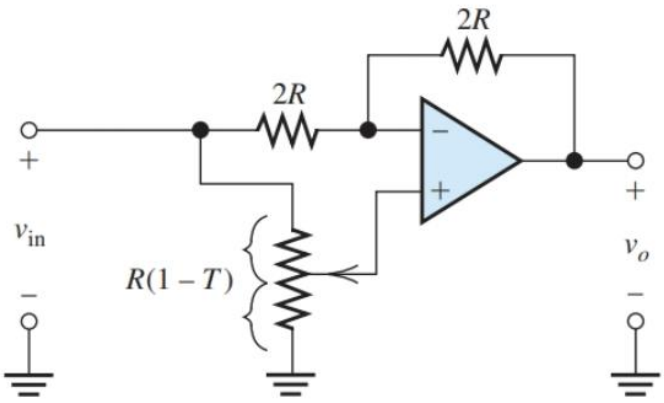

11. Consider the circuit shown below.
    a. Find an expression for v_o, the output impedance of the circuit, and the input impedance of the circuit. [Hambley]
    b. What kind of amplifier is this circuit? [Hambley]

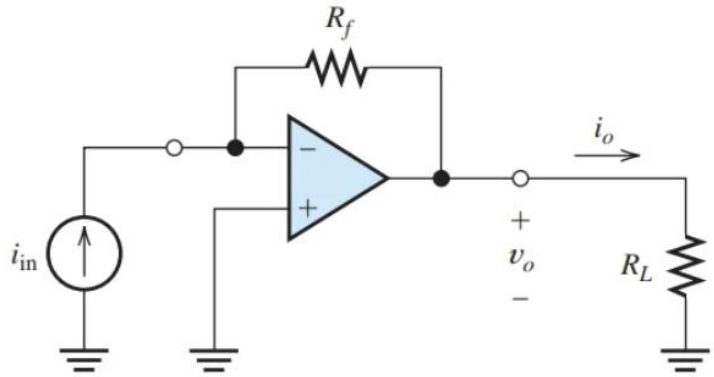

12. For the circuit below, explain why $V_o \neq V_i$. [Alciatore]

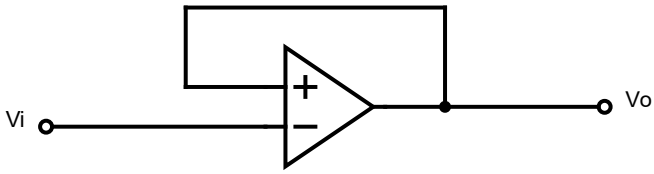

13. Determine v_o as an expression of I and the resistor values for the circuit below. [Alciatore]

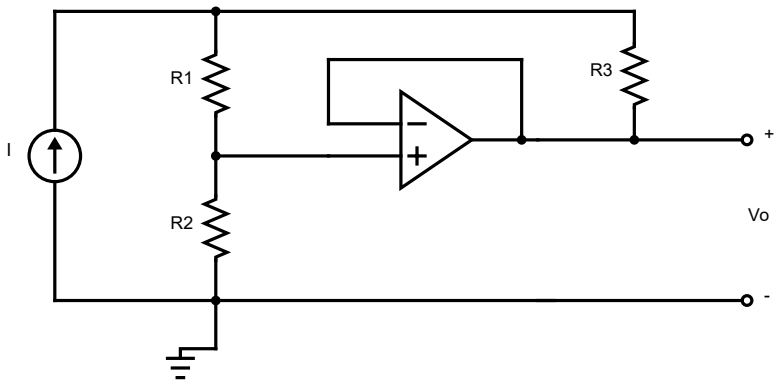

14. It is given that the input voltage, V_i, follows the waveform shown.

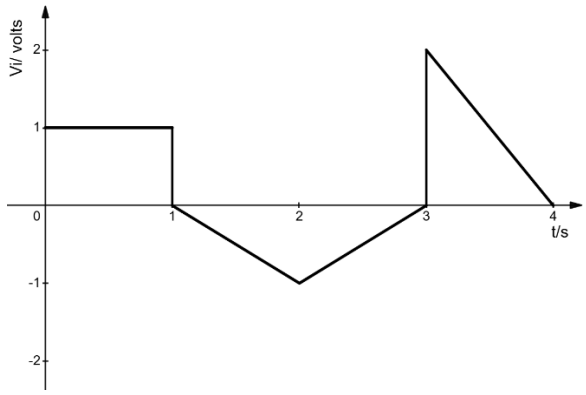

Sketch the output voltage waveform for each of the circuits shown:

a. [Alciatore]

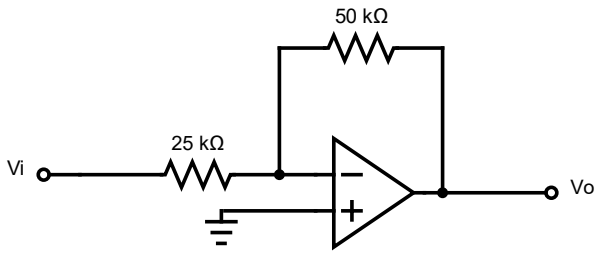

b. [Alciatore]

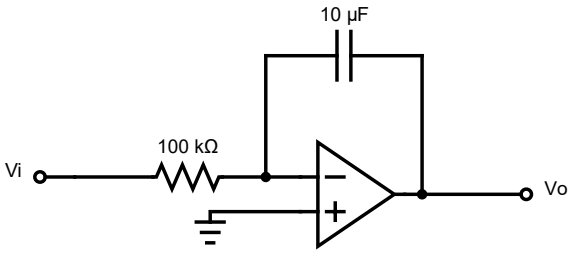

c. [Alciatore]

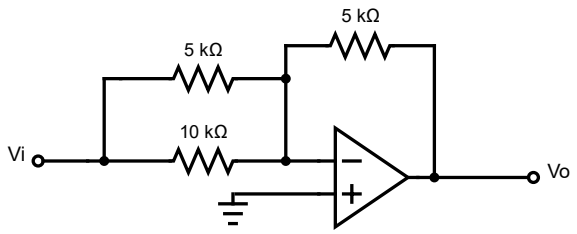

d. [me]

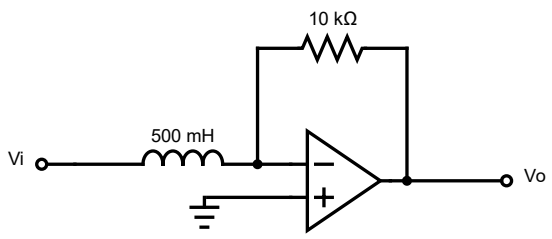

15. From the circuit below, determine I as an expression of V_i, R_1, R_2, R_3 and R_4. [Alciatore]

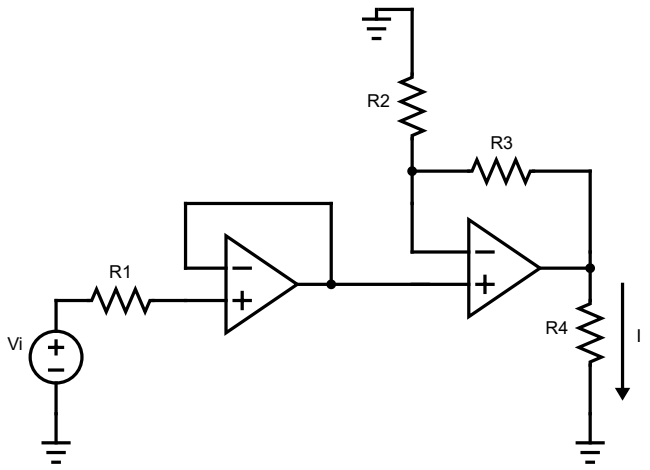

16. If the short circuit output current of a **practical** op-amp is 10mA, find the minimum resistance required for the feedback resistor in an inverting op amp circuit with a gain of 10 and a maximum output voltage of 10V. [Alciatore]

Electromagnetism & DC Motors

1. The magnetic field of the earth is approximately $3 \times 10^{-5}\ T$. At what distance from a long straight wire carrying a steady current of 20 A is the field equal to 10 percent of the earth's field? [Hambley]

2. Two very long parallel wires are 2 cm apart and carry currents of 20 A in the same direction. The material surrounding the wires has $\mu_r = 1$. Determine the force on a 0.5m section of one of the wires. Do the wires attract or repel one another? [Hambley]

3. A very long, straight wire carrying current i(t) and a rectangular single-turn coil lie in the same plane, as illustrated in the figure shown. The wire and the coil are surrounded by air.

   a. Derive an expression for the flux linking the coil. [Hambley]
   b. Derive an expression for the voltage $v_{ab}(t)$ induced in the coil. [Hambley]
   c. Determine the rms value of vab, given that i(t) is a 10-A rms 60-Hz sinusoid, l = 10 cm, r1 = 1 cm, and r2 = 10 cm. [Hambley]

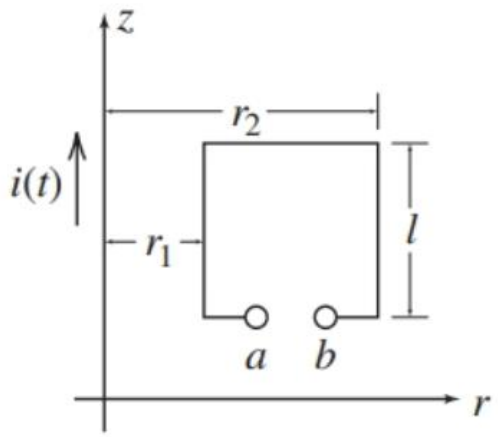

4. A motor has output torque given by $T_{out} = 2 \times 10^{-2}(30\pi - \omega_m)\omega_m$. [Hambley]

   a. Find the no-load speed of the motor.
   b. At what speed between zero and the no-load speed is the output torque maximum? What is the maximum output torque?
   c. At what speed between zero and the no-load speed is the output power maximum? What is the maximum output power?
   d. Find the starting torque of the motor. How could this motor be started?

5. Suppose that an external force of 20 N directed toward the top of the page is applied to the bar as shown in the figure below. In steady state, is the machine acting as a motor or as a generator? Find the power supplied by or absorbed by: [Hambley]

a. the electrical voltage source V_T
b. R_A
c. the external force.

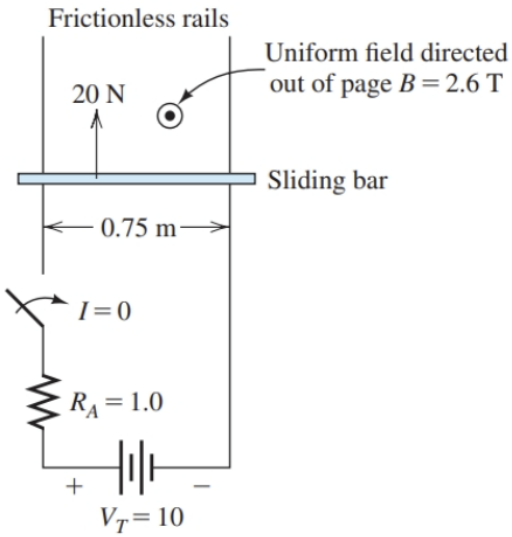

6. We have presented the linear dc machine with an applied magnetic field, such as we might have in a dc motor. However, forces are exerted on the slider by the magnetic field produced by the currents in the rails. This is the principle of the electromagnetic rail gun for which you can find many references on the web including many practical construction tips. A version of such a rail gun is shown in the figure below. [Hambley]

a. When the switch closes, in which direction is force exerted on the projectile?

b. Suppose that the projectile mass is 3g. Assuming that all of the energy stored in the capacitor is transferred to kinetic energy in the slider, determine its final velocity. (Note: The highest velocity achievable by ordinary rifle bullets is about 1200 m/s.)

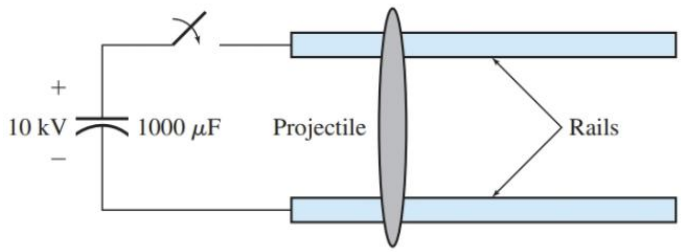

7. A permanent magnet dc motor has $R_A = 7\Omega$, $V_T = 200V$, and operates under no-load conditions at a speed of 1600rpm with $I_A = 0.5A$. A load is connected and the speed drops to 1400rpm. Determine the efficiency of the motor under loaded conditions. Assume that the losses consist solely of heating of R_A and frictional loss torque that is independent of speed. [Hambley]

8. A certain motor has an induced armature voltage of 240 V at $n_{m1} = 1400rpm$. Suppose that this motor is operating at a speed of $n_{m2} = 1800rpm$ with a developed power of 5hp. Find the armature current and the developed torque. [Hambley]

9. A shunt-connected motor delivers an output power of 12 hp at 1200 rpm while operating from a source voltage of 440 V and drawing I_L = 25 A. The resistances are R_A = 0.05 Ω and $R_F + R_{adj}$ = 100 Ω. Find the developed torque and efficiency of the motor. [Hambley]

10. A shunt-connected dc motor has zero rotational losses and $R_A = 0$. Assume that $R_F + R_{adj}$ is constant [except in part (d)] and that ϕ is directly proportional to field current. For $V_T = 200V$ and $P_{out} = 2hp$, the speed is 1200rpm. What is the effect on I_A and speed if: [Hambley]

a. the load torque doubles
b. the load power doubles
c. V_T is changed to 100V and P_{out} remains constant
d. $R_F + R_{adj}$ is doubled in value and P_{out} remains constant?

11. A series-connected dc motor has $R_F + R_A = 0.6\Omega$ and draws $I_A = 40A$ from the DC source voltage $V_T = 220V$ while running at 900rpm. The rotational losses are 400W. [Hambley]

a. Find the output power and developed torque.
b. Suppose that the load torque is reduced by a factor of two and that the rotational power loss is proportional to speed. Find the new values of I_A and speed.

12. Suppose that a shunt-connected machine operates at 800rpm on the linear portion of its magnetization characteristic. The motor drives a load that requires constant torque. Assume that $R_A = 0$. The resistances in the field circuit are $R_F = 50\Omega$ and $R_{adj} = 25\Omega$. [Hambley]

a. Find a new value for R_{adj} so that the speed becomes 1200 rpm.
b. What is the slowest speed that can be achieved by varying R_{adj}?

AC Power & Motors

1. Find the rms value of the following signal:

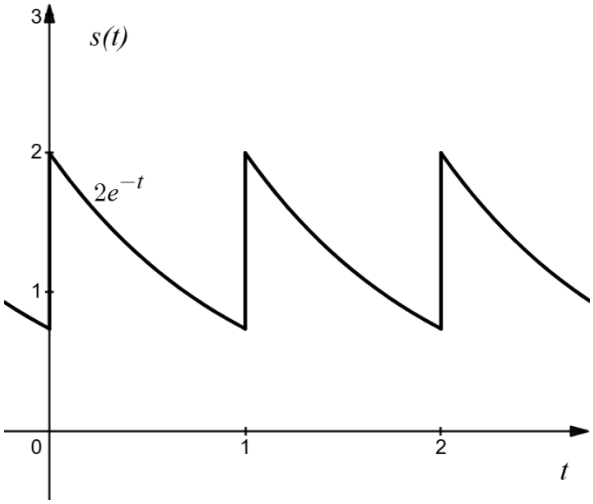

2. Find the rms value of the following signal:

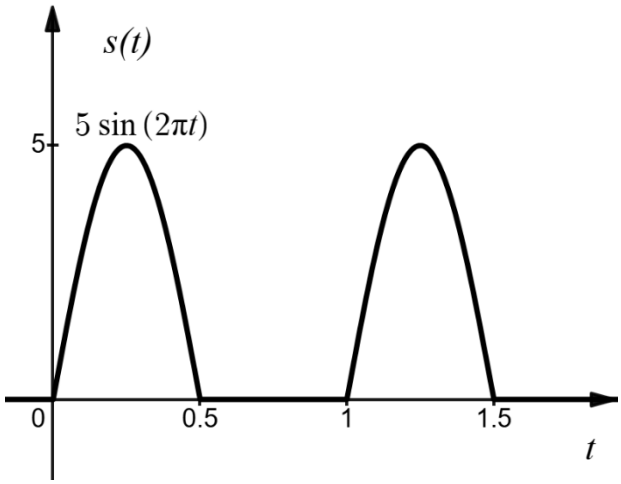

3. Find the phasors for the voltage and the currents for the circuit shown in the figure below. Construct a phasor diagram showing Is, V, IR, and IC. What is the phase relationship between V and Is?

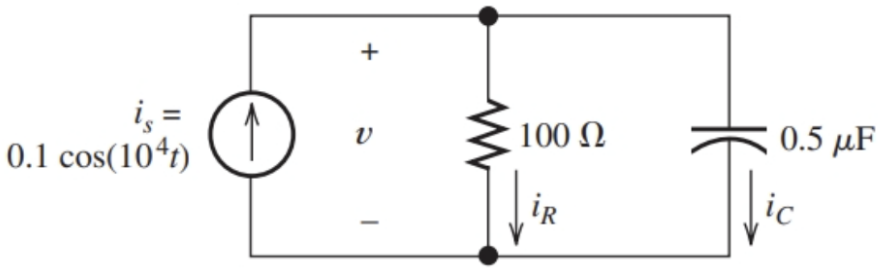

4. A balanced wye-connected three-phase source has line-to-neutral voltages of 240 V rms. Find the rms line-to-line voltage. This source is applied to a wye-connected load, each arm of which consists of a 10Ω resistance in parallel with a j5Ω reactance. Determine the rms line current magnitude and the total power delivered.

5. A 10-hp six-pole 60-Hz three-phase induction motor runs at 1160 rpm under full-load conditions. Determine the slip and the frequency of the rotor currents at full load.

6.

Answers

Circuits I, II, III:

MCQ: 1(d) 2(c) 3(b) 4(b) 5(b) 6(a) 7(b)
OEQ:

8. -0.07A, 2.83V
9. 9.6V, 11.2V
10. 7.06Ω
11. Nortons equivalent of 0.588A & 17 ohms, Max power 1.47W
12. 34.7V, -65.3W
13. 28.8A
14. 1.2Ω
15. -1.25V
16. 2.33V
17. 15V, 5Ω
18. 0Ω, 80W
19. -10V (probably wrong I think)
20. 3.78V, 1.286A

Sensors & Signal Conditioning:

MCQ: 1(a) 2(b) 3(d) 4(b) 5(c) 6(b)
OEQ:

7.
8. B, C, C
9.
10. 10Ω
11. 0V, leftward deflection, $V_{AB} = \frac{100}{121}\frac{R_\delta(T)}{R_0}$
12. 5932 Ω, -78.79nA
13.
14. 5.852mV
15. 2.36
16. 636.6 MPa, 0.8079 Ω, -1.683v_i mV ??????????????????????????????????
17. (2L+dL)/L
18. The voltage across the terminals will be 0V

Capacitors & Inductors:

MCQ: 1(d) 2(c) 3(d) 4(d) 5(c) 6(b)
OEQ:

7. 36.8V
8. 420ms
9. 21.25ms, 1.125GJ
10. 0V, 812V
11. 532μs, 894.2 μs
12. 0.368Q
13. 5V
14. 2.5A

Operational Amplifiers:

OEQ:

1. $8v_o$
2. -40V
3. -2.7V
4.
5.
6.
7.
8.
9.
10. 1-2T
11.
12.
13.
14.
15.
16.

Electromagnetism & DC Motors:

1. 1.33m
2. 0.002N (attract)
3. $\frac{4}{r_1+r_2} \times 10^{-7} \times i(t)$, $\frac{4l(r_2-r_1)}{r_1+r_2} \times 10^{-7} \times i'(t)$, 65.45mV
4. $\omega_m = 30\pi\ rad/s$, $15\pi rad/s$ at $44.41Nm$, $20\pi rad/s$ at $39.48Nm$, 0Nm; extra auxiliary winding
5. 102.5W, 105.06W, 2.56W
6. 50kJ, 5773m/s
7. 75.25%
8. 12.09A
9. 74.75Nm, 81.38%
10.

11.
12.

AC Power & Motors:

1.
2.
3.
4.
5.
6.