Monostable & Astable Multivibrators

A multivibrator is a circuit that produces square or rectangular waveforms, and may have 0, 1 or 2 stable states.

A multivibrator with 2 stable states is a bistable, which has been covered.

A multivibrator with 1 stable state is a monostable, while a multivibrator with no stable states is an astable.

Monostable Vibrators

Also called a one-shot, monostables have one stable state (when Q = 0) and can be triggered to give a pulse of 1.

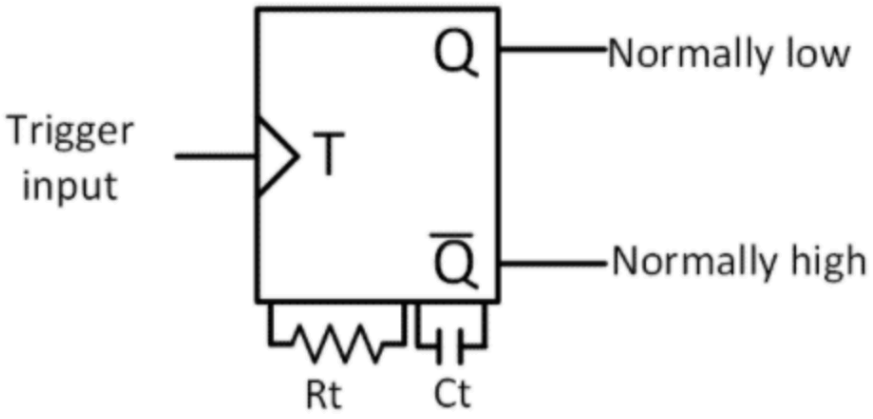

when Q = 1, it reaches a quasi-stable state (partially stable) as it will stay at Q = 1 for a period of time, before returning to its stable state of Q = 0.

The pulse duration is dependent of the resistance and capacitaunce used in the monostable, being

$$t_p = 0.7R_tC_t$$

There are 2 types of monostables, non-retriggerable, and retriggerable.

A non-retriggerable monostable will not respond to the trigger T during the quasi-stable state, meaning that the pulse length of Q will always be , even when T is triggered multiple times.

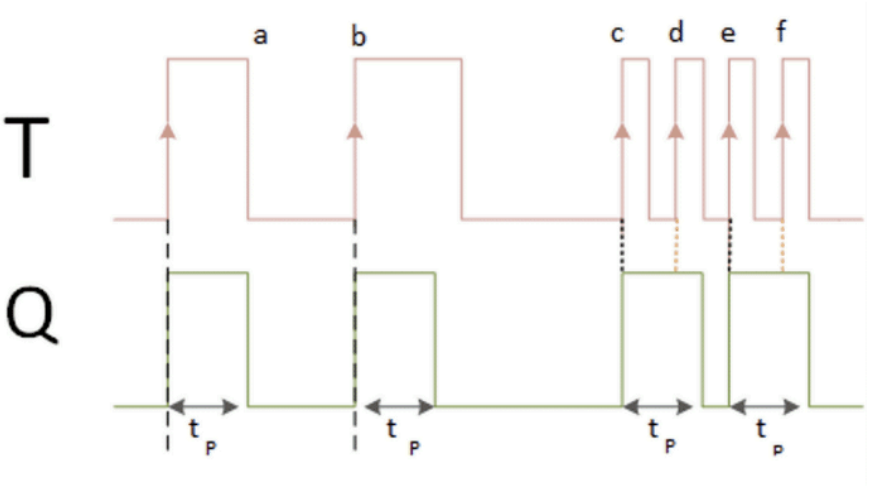

A retriggerable monostable responds to trigger T during the quasi stable state, and Q will “refresh” and stay on for t_p more seconds. This causes pulses that are more than t_p seconds

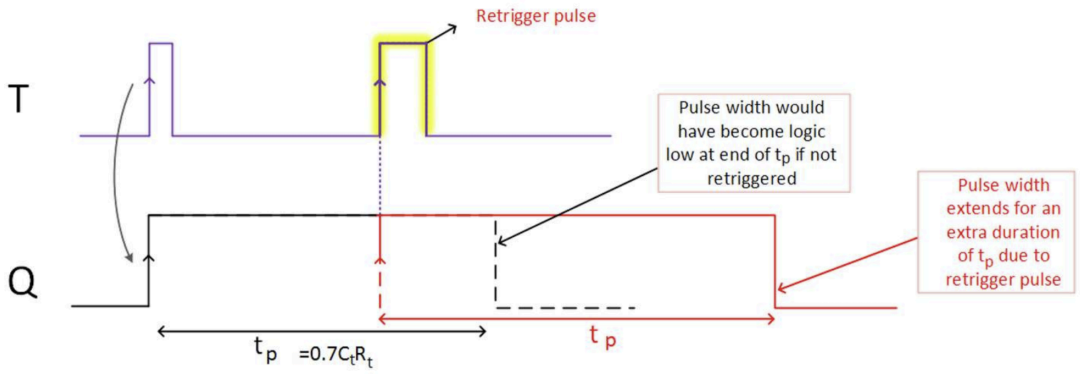

By using different monostables with different pulse times, we can use them to widen or narrow pulses:

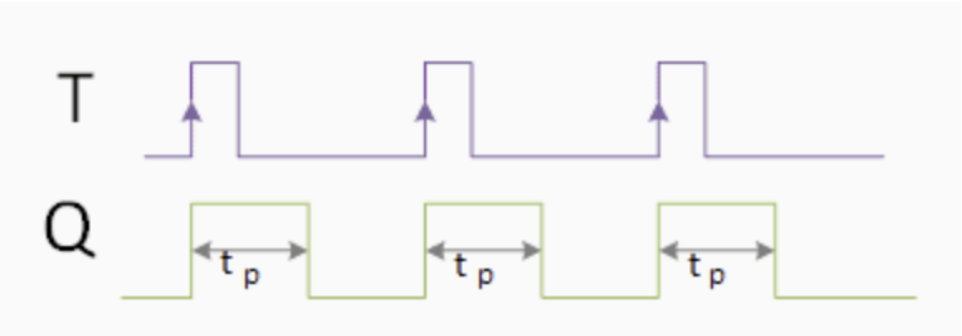

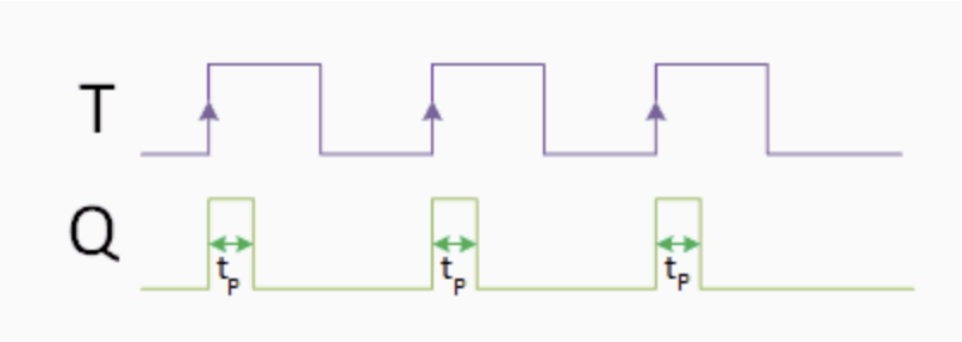

or to block unwanted pulses with retriggerable monostables:

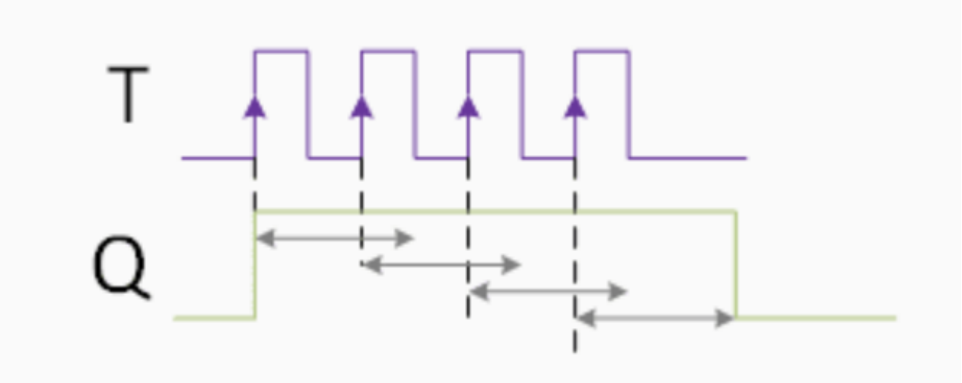

Standard and Schmitt-Trigger Inverters

When a standard inverter/not gate is given a slow changing signal, the signal will spend more time in the undefined range (0.8V to 2V), which makes it ambiguous for the inverter to decide how to interpret the signal, causing it to oscillate in this time range.

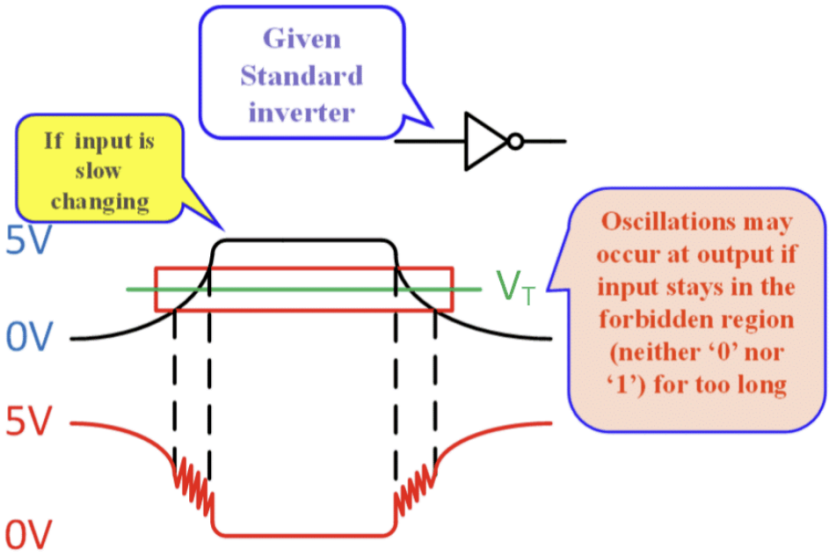

For some applications, like the astable, this is not desirable.

A Schmitt-Trigger Inverter is able to overcome this issue by having distinct threshold values that cause the output signal to change.

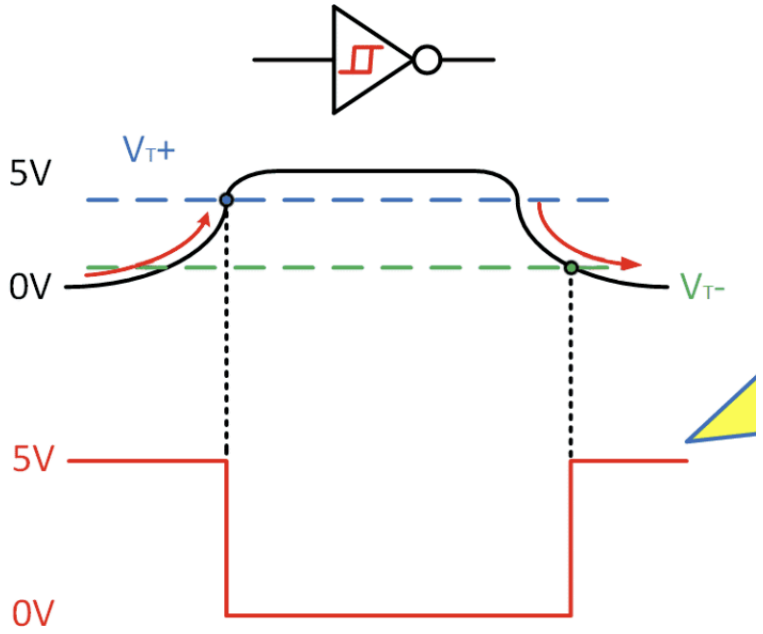

Notice how as the voltage increases, it changes at the upper threshold (V_t+), while as it decreases, it changes at the lower threshold (V_t-).

This causes a discrete step in the output signal, as there is no ambiguous state for the input voltage.

This makes it useful for astables, which are circuits that continuously oscillate (as they have no stable state), making it useful for clock signals.

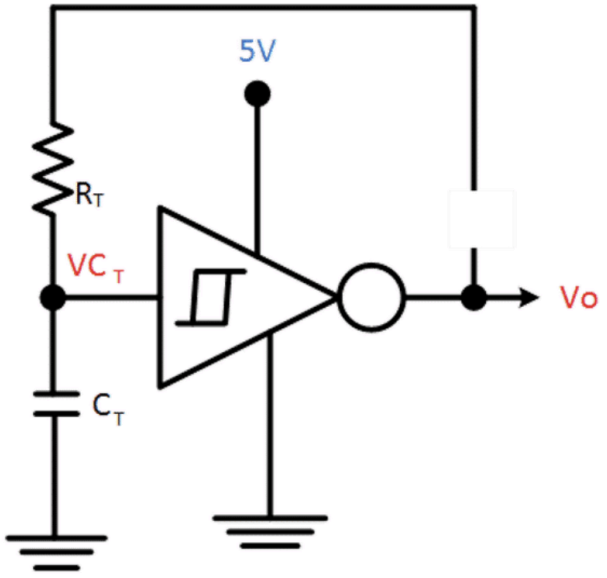

Shown is the schematic of a Schmitt triggered inverter astable, or a Schmitt Triggered oscillator. Its frequency can be found from

$$f = \frac{0.8}{R_t C_t}[Hz]$$

At its core, the astable has the output connected to the input, hence when Vo is high, it goes into the inverter and makes Vo low, which goes into the input and makes Vo high, repeating and thus causing it to oscillate.

What makes this schematic different is that the resistor Rt helps to slow the frequency down, and that the capacitor has to charge between oscillations which also controls the frequency.

Lets assume Vo is high at first. This can be thought of as Vo being connected to the 5V source.

Hence, the resistor and capacitor in series are connected to the 5V, forming a RC circuit, allowing the capacitor to charge up. As it charges, the input of the inverter is essentially reading the voltage across the capacitor. Hence, it will reach the Vt+ at some point, causing Vo to switch to low.

When Vo is low, Vo is essentially connected to ground. Hence the RC circuit will start to discharge, causing the voltage to drop across the capacitor. At some point, Vc will reach Vt-, thus causing the inverter to toggle Vo again, repeating the oscillation.

This idea of charging and discharging to reach the desired voltage (5V or 0V) can be seen by the waveform:

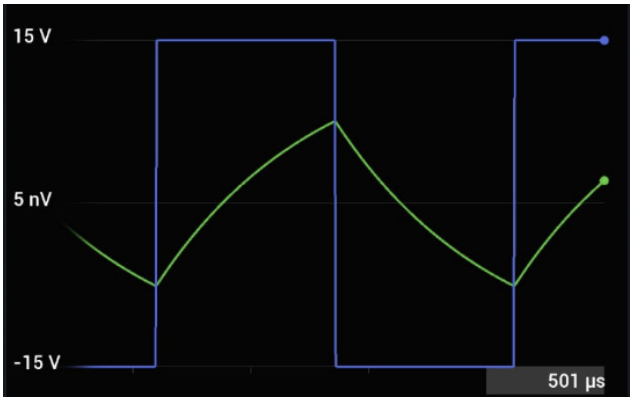

When Vo is high, the capacitor will try and charge to Vo, however as it does so, it triggers the inverter to flip Vo to 0, and the capacitor will try and charge to Vo again.

This RC circuit inside the oscillator also shows that:

$$f = \frac{0.8}{\tau} \Rightarrow f \propto \tau^{-1}$$