Operational Amplifiers

Working Principle of Op Amps

An operational amplifier, op amp, consists of two voltage inputs and one output voltage, alongside two power terminals (usually ranges from +-5V to +-30V).

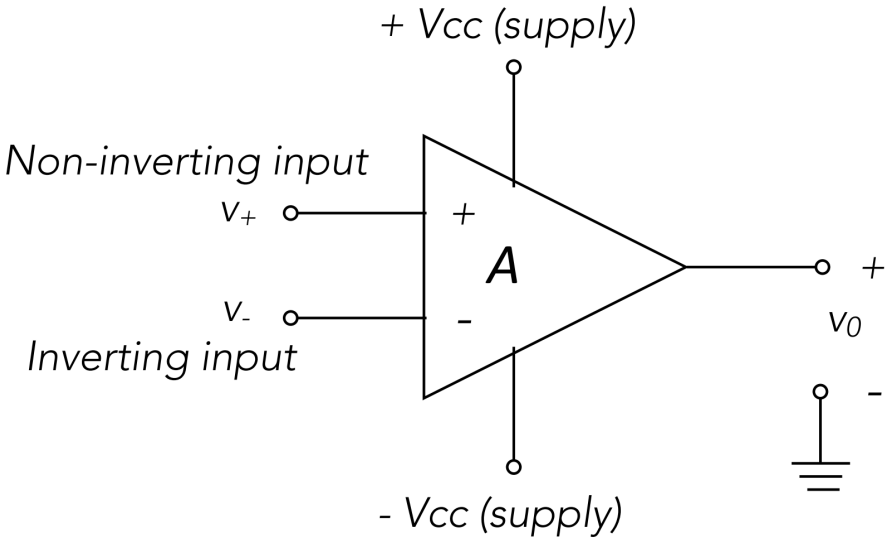

The “positive” terminal is known as the non-inverting input while the negative terminal is the inverting input, and the output voltage is based on the two inputs as

$$v_0 = A(v_+ - v_-)$$

where A is the open loop gain, usually a very high number, idealised to infinity. This means that for a small difference in the two inputs, the output voltage is amplified by the gain.

The sign of the voltages matters too. The inputs need not follow the convention said earlier, hence it is possible for the difference to be negative and thus the amplified voltage to be negative.

The circuit model of an op amp is as shown:

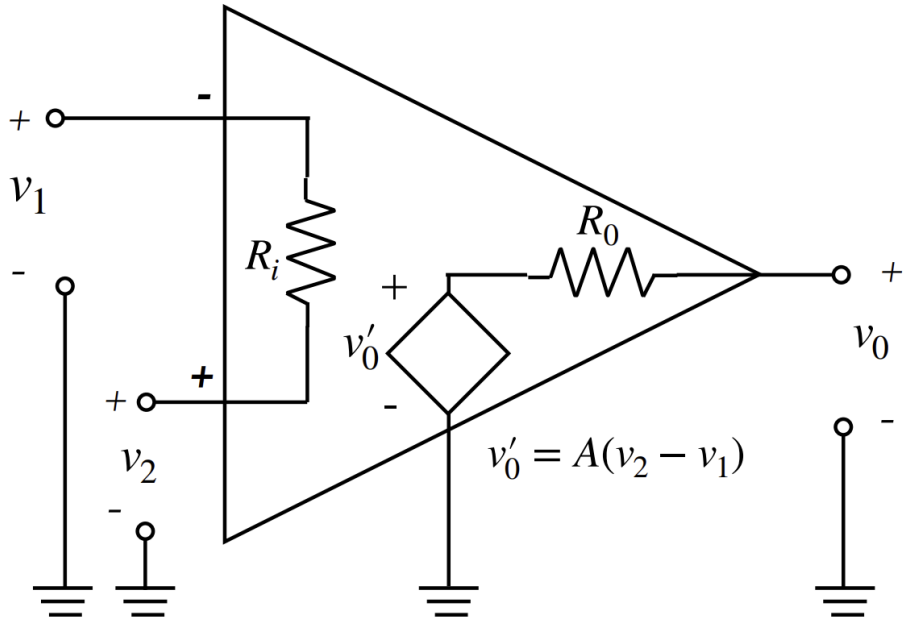

Ideally, the input resistance/impedance is very high to not draw any current from the input terminals, the output impedance is very low to match the voltage produced by the dependent voltage source, and the gain is infinitely high. In the case of AC inputs, the op amp has an infinitely high bandwidth, meaning it maintains a high A even as frequency increases.

Practically, Ri is only a high, non infinite resistance, Ro is a low, non 0 resistance, A is a high but non-infinite value, and the bandwidth is limited to a high frequency.

Characteristics	Ideal	Typical (e.g. 741)
Open loop Gain, *A*	∞	10^5
Internal Resistance, R_i	∞	$2M\Omega$
Output Resistance R_0	0	75Ω
Bandwidth	∞	Limited ~ 10kHz

Typically, the open loop gain need not be controlled strictly, as the main purpose of it is that is a very high multiplier.

Op Amps Circuit Analysis

If the output is not connected to either of the inputs, the op amp is configured in an open loop. However, if the output is connected to the input, the op amp is configured in a closed loop. Typically, the output is connected to the inverting input to produce a negative feedback, useful for stabilising.

For example, consider the setup shown, which is an inverting amplifier:

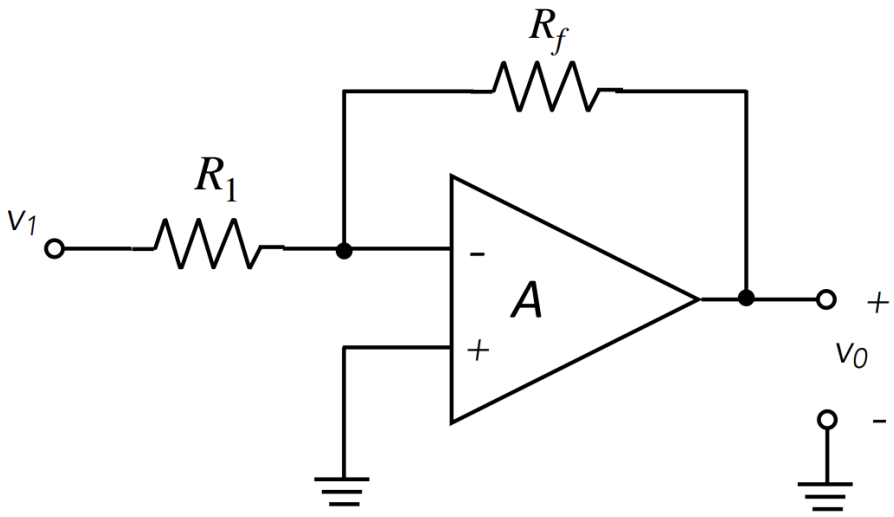

Including the impedances of the op amp gives

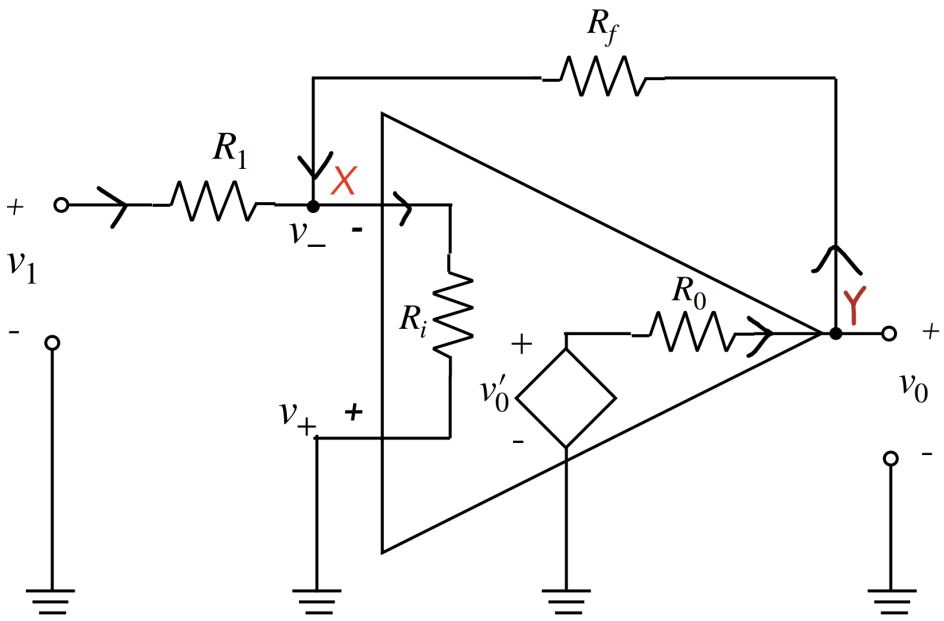

Hence, we know that $v_+ = 0$, thus we can find the voltage produced by the dependent source:

$$v_0' = A(v_+ - v_-) = A(0 - v_-) = -Av_-$$

then, apply node voltage analysis:

$$X : \frac{v_1 - v_-}{R_1} + \frac{v_0 - v_-}{R_f} - \frac{v_-}{R_i} = 0 \rightarrow (1)$$
$$Y : \frac{v_0' - v_0}{R_0} - \frac{v_0 - v_-}{R_f} = 0 \rightarrow (2)$$

From Y:

$$\frac{-Av_- - v_0}{R_0} - \frac{v_0 - v_-}{R_f} = 0$$
$$\frac{R_f(-Av_- - v_0)}{R_0 R_f} - \frac{R_0(v_0 - v_-)}{R_0 R_f} = 0$$
$$\frac{R_f(-Av_- - v_0) - R_0(v_0 - v_-)}{R_0 R_f} = 0$$
$$\frac{-AR_f v_- - R_f v_0 - R_0 v_0 + R_0 v_-}{R_0 R_f} = 0$$
$$-AR_f v_- + R_f v_0 - R_0 v_0 - R_0 v_- = 0$$
$$-AR_f v_- + R_0 v_- - R_f v_0 - R_0 v_0 = 0$$
$$v_-(-AR_f + R_0) - v_0(R_f + R_0) = 0$$
$$v_-(R_0 - AR_f) = v_0(R_f + R_0)$$
$$v_- = v_0 \frac{(R_f + R_0)}{(R_0 - AR_f)}$$

Then, substitute this value of v- into X:

$$\frac{v_1 - v_-}{R_1} + \frac{v_0 - v_-}{R_f} - \frac{v_-}{R_i} = 0$$
$$\frac{v_1}{R_1} - \frac{v_-}{R_1} + \frac{v_0}{R_f} - \frac{v_-}{R_f} - \frac{v_-}{R_i} = 0$$
$$\frac{v_1}{R_1} + \frac{v_0}{R_f} - v_-\left(\frac{1}{R_1} + \frac{1}{R_f} + \frac{1}{R_i}\right) = 0$$
$$\frac{v_1}{R_1} + \frac{v_0}{R_f} - v_0\frac{(R_f + R_0)}{(R_0 - AR_f)}\left(\frac{1}{R_1} + \frac{1}{R_f} + \frac{1}{R_i}\right) = 0$$

However, as we let $A \to \infty$, $R_0 - AR_f \to -\infty$, thus $\frac{(R_f+R_0)}{(R_0-AR_f)} \to 0$. Hence,

$$\frac{v_1}{R_1} + \frac{v_0}{R_f} = 0$$

Thus, we have an equation for the input voltage (v1) and the output voltage (v0). Hence,

$$v_0 = -v_1 \frac{R_f}{R_1}$$

Important things to note:

- v0 is now negative to the input voltage,
- The amount v0 is amplified by is dependent on the external resistances, and not by A.
- This also means that $-\frac{R_f}{R_1}$ is the gain of our inverting amplifier. This is different from A, which is the open loop gain.

Now, say we had to find the input impedance of the circuit.

We know the input current is just

$$i_{in} = \frac{v_1 - v_-}{R_1}$$

We already know that $v_0' = -Av_-$. Thus,

$$v_- = -\frac{v_0'}{A}$$

Since $A \to \infty$, $-\frac{v_0'}{A} \to 0$, Thus $v_- \to 0$. Hence,

$$i_{in} = \frac{v_1}{R_1}$$

Impedance is found by ohms law, that is impedance = V/I, thus obviously

$$\frac{v_1}{i_{in}} = R_1$$

Hence the input impedance is just R1, the external input resistance used.

Note that generally, the input impedance is the input voltage divided by the input current.

Ideal Op Amp Analysis

An ideal op amp has three assumptions

Under negative feedback, $v_+ = v_-$.

No current is drawn into the inputs, hence $i_{in} = 0$

The open loop gain, A is infinite, in other words $A \to \infty$

This allows us to apply a similar methodology to these problems, by finding the KVL at nodes v+ and v-, and then letting v+ = v-.

Thus, consider the same inverting amplifier from earlier:

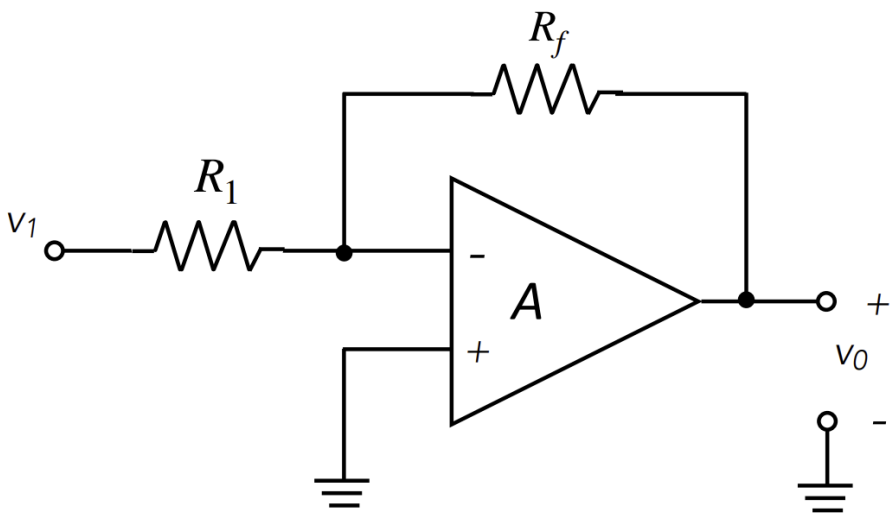

We know that

$$v_+ = 0 \Rightarrow v_- = v_+ = 0$$

Then at v_- we apply KCL:

$$\frac{v_1 - v_-}{R_1} + \frac{v_0 - v_-}{R_f} = 0$$

Since $v_- = 0$,

$$\frac{v_1}{R_1} + \frac{v_0}{R_f} = 0$$
$$v_0 = -v_1 \frac{R_f}{R_1}$$

Which gives us the same expression as earlier.

We can also use this technique to find input impedance, by finding an expression for the input current in terms of the input voltage, then finding v_in/i_in.

$$i_{in} = \frac{v_1 - v_-}{R_1}$$
$$i_{in} = \frac{v_1 - 0}{R_1}$$
$$i_{in} = \frac{v_1}{R_1}$$
$$R_1 = \frac{v_1}{i_{in}}$$

thus giving R1 as the input impedance.

Applications of Op Amps

Inverting Summation Amplifier

Consider the setup:

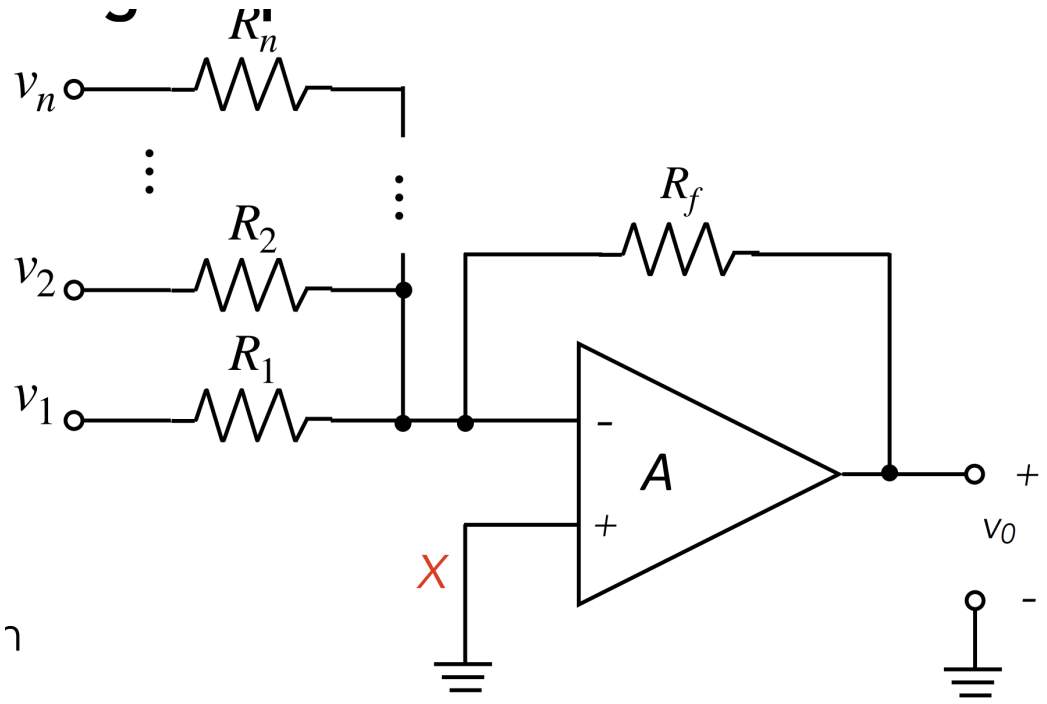

To determine an expression for v0, first find that

$$v_+ = 0 \Rightarrow v_- = v_+ = 0$$

Then, apply KCL at v-,

$$\sum_{i=1}^{n} \frac{v_i - v_-}{R_i} + \frac{v_0 - v_-}{R_f} = 0$$
$$\sum_{i=1}^{n} \frac{v_i}{R_i} + \frac{v_0}{R_f} = 0$$
$$v_0 = -R_f \sum_{i=1}^{n} \frac{v_i}{R_i}$$

Now, if all of the Ri terms are equal to each other,

$$v_0 = -\frac{R_f}{R_1} \sum_{i=1}^{n} v_i$$

which means that this setup takes the sum of all the input voltages and amplifies them by a gain of $-\frac{R_f}{R_1}$.

Non-Inverting Amplifier

Consider the setup:

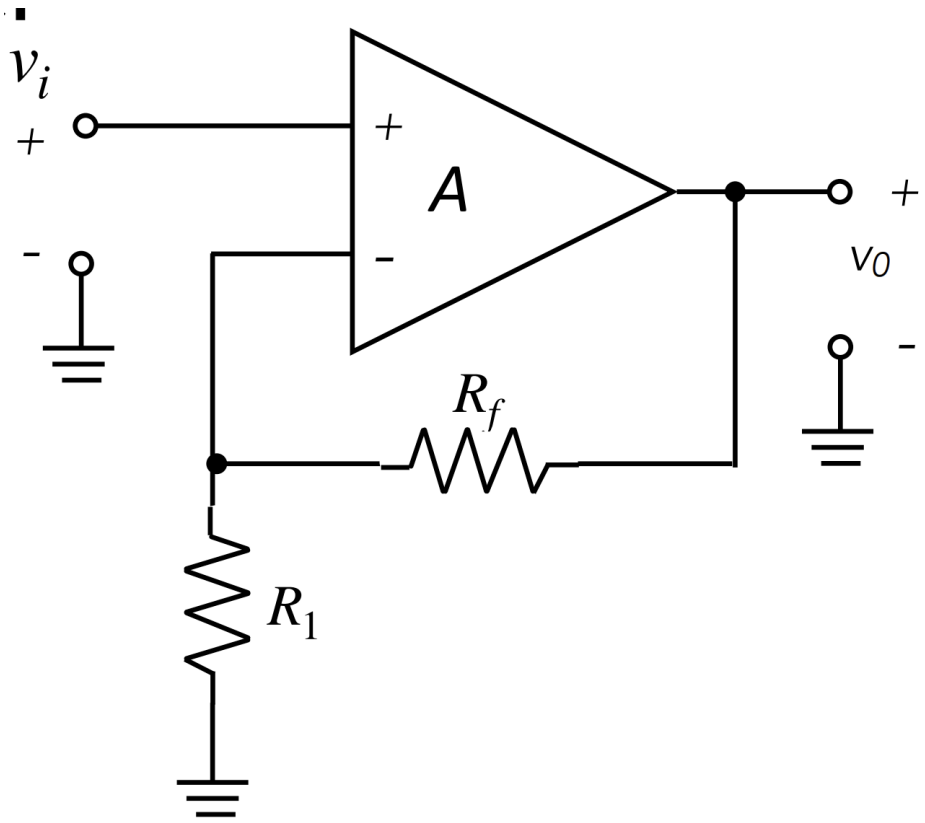

This time, the non inverting input is connected to v_i, thus

$$v_+ = v_i \Rightarrow v_- = v_+ = v_i$$

Then, KCL at v- is

$$\frac{v_0 - v_-}{R_f} - \frac{v_- - 0}{R_1} = 0$$
$$\frac{v_0 - v_i}{R_f} - \frac{v_i}{R_1} = 0$$
$$\frac{v_0}{R_f} - \frac{v_i}{R_f} - \frac{v_i}{R_1} = 0$$
$$\frac{v_0}{R_f} - v_i\left(\frac{1}{R_f} + \frac{1}{R_1}\right) = 0$$
$$\frac{v_0}{R_f} = v_i\left(\frac{1}{R_1} + \frac{1}{R_f}\right)$$
$$\frac{v_0}{R_f} = v_i\left(\frac{R_1 + R_f}{R_1 R_f}\right)$$
$$v_0 = v_i R_f\left(\frac{R_1 + R_f}{R_1 R_f}\right)$$
$$v_0 = v_i\left(\frac{R_1 + R_f}{R_1}\right)$$
$$v_0 = v_i\left(1 + \frac{R_f}{R_1}\right)$$

Hence the input voltage is amplified by a gain of $1 + \frac{R_f}{R_1}$.

We can also find input impedance as infinity, since 0 current flows into the input terminal, thus $\frac{v_i}{0^+} = +\infty$.

Voltage Follower

Consider the setup:

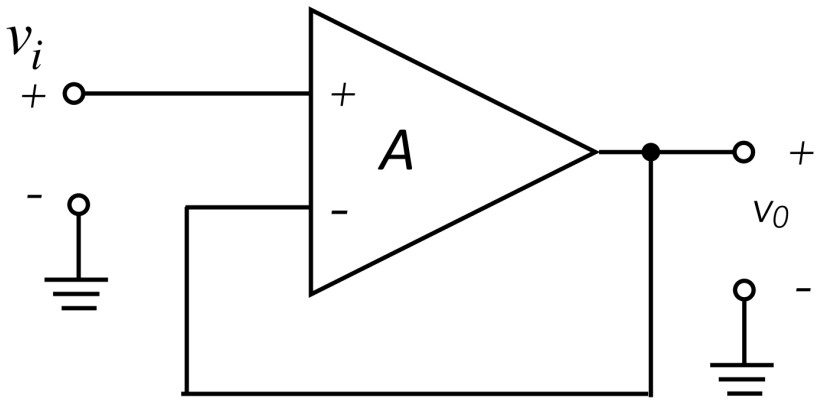

Again, the non inverting input is connected to vi, thus

$$v_+ = v_i \Rightarrow v_- = v_+ = v_i$$

And since a conductor connects v- and v0,

$$v_0 = v_- = v_i$$

Thus,

$$v_0 = v_i$$

This setup essentially copies the input voltage, producing the same voltage from its power rails without disrupting the original signal as no current is drawn into the op amp.

Differential Amplifier

Consider the setup:

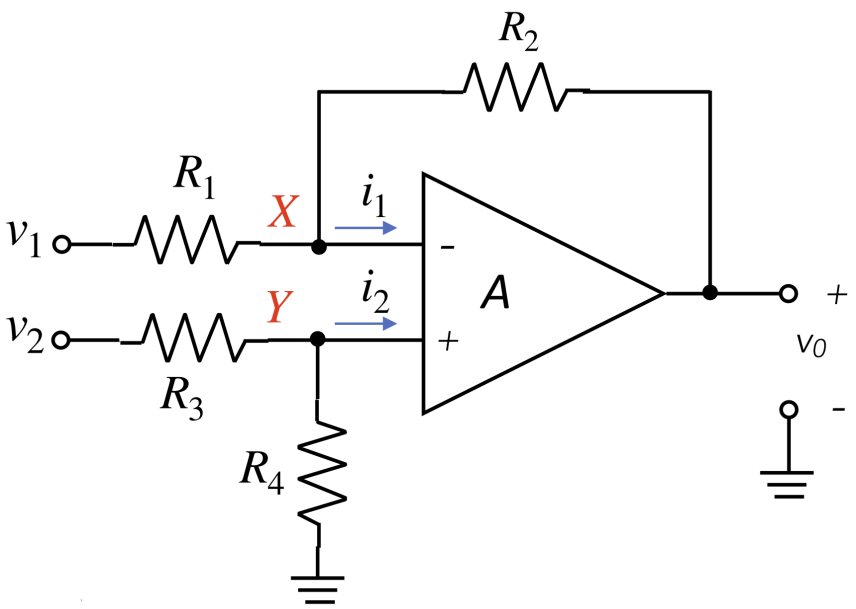

We know that

$$v_+ = v_-$$

However we do not know the actual voltages yet.

Still, apply KCL at X and Y:

$$
\begin{aligned}
X: \frac{v_1 - v_-}{R_1} + \frac{v_0 - v_-}{R_2} &= 0 \\
Y: \frac{v_2 - v_+}{R_3} - \frac{v_+ - 0}{R_4} &= 0
\end{aligned}
$$

From Y:

$$
\begin{aligned}
\frac{v_2 - v_+}{R_3} - \frac{v_+ - 0}{R_4} &= 0 \\
\frac{v_2}{R_3} - \frac{v_+}{R_3} - \frac{v_+}{R_4} &= 0 \\
\frac{v_2}{R_3} - v_+ \left(\frac{1}{R_3} + \frac{1}{R_4} \right) &= 0 \\
\frac{v_2}{R_3} - v_+ \left(\frac{R_3 + R_4}{R_3 R_4} \right) &= 0 \\
\frac{v_2}{R_3} &= v_+ \left(\frac{R_3 + R_4}{R_3 R_4} \right) \\
v_+ &= \frac{v_2}{R_3} \left(\frac{R_3 R_4}{R_3 + R_4} \right)
\end{aligned}
$$

Simplify X:

$$
\begin{aligned}
\frac{v_1 - v_-}{R_1} + \frac{v_0 - v_-}{R_2} &= 0 \\
\frac{v_1}{R_1} - \frac{v_-}{R_1} + \frac{v_0}{R_2} - \frac{v_-}{R_2} &= 0 \\
\frac{v_1}{R_1} + \frac{v_0}{R_2} - v_- \left(\frac{1}{R_1} + \frac{1}{R_2} \right) &= 0 \\
\frac{v_0}{R_2} &= v_- \left(\frac{1}{R_1} + \frac{1}{R_2} \right) - \frac{v_1}{R_1} \\
\frac{v_0}{R_2} &= v_- \left(\frac{R_1 + R_2}{R_1 R_2} \right) - \frac{v_1}{R_1}
\end{aligned}
$$

and since $v_+ = v_-$,

$$
\begin{aligned}
\frac{v_0}{R_2} &= v_+ \left(\frac{1}{R_1} + \frac{1}{R_2} \right) - \frac{v_1}{R_1} \\
\frac{v_0}{R_2} &= \frac{v_2}{R_3} \left(\frac{R_3 R_4}{R_3 + R_4} \right) \left(\frac{R_1 + R_2}{R_1 R_2} \right) - \frac{v_1}{R_1}
\end{aligned}
$$

Say if we let $R_1 = R_3$ and $R_2 = R_4$. The two large fractions cancel out, and the denominators of the v1 and v2 terms match.

$$\frac{v_0}{R_2} = \frac{v_2}{R_1}\cancel{\left(\frac{R_1 R_2}{R_1 + R_2}\right)}\cancel{\left(\frac{R_1 + R_2}{R_1 R_2}\right)} - \frac{v_1}{R_1}$$
$$\frac{v_0}{R_2} = \frac{1}{R_1}(v_2 - v_1)$$
$$v_0 = \frac{R_2}{R_1}(v_2 - v_1)$$

Hence, the output voltage amplifies the difference between the inputs, by a gain of $\frac{R_2}{R_1}$.

Integrator

Consider the setup:

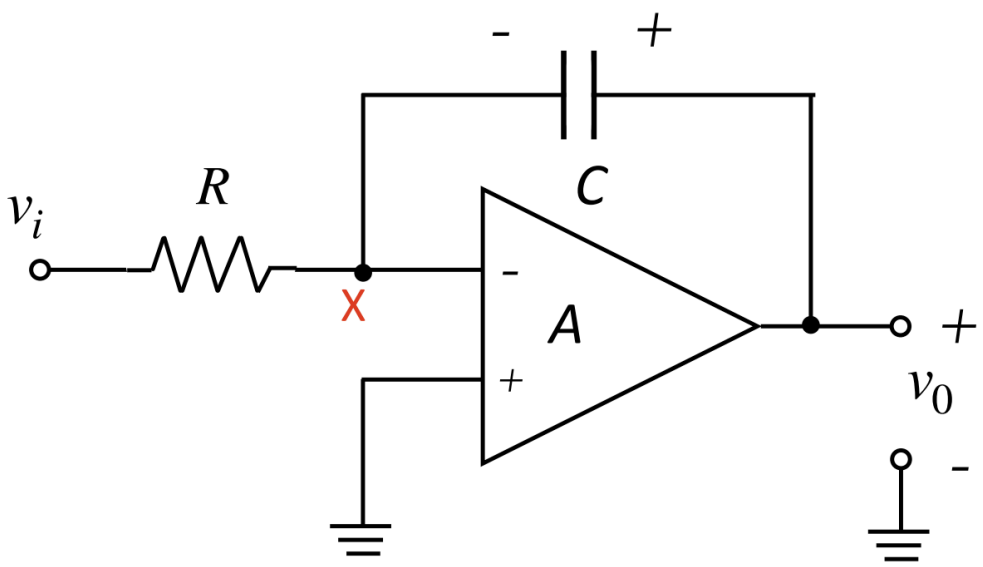

We know that $v_+ = 0$, thus

$$v_+ = v_- = 0$$

Hence, at X:

$$\frac{v_i - 0}{R} + i_c(t) = 0$$

We know that a capacitor has $i(t) = Cv'(t)$, and since it is connected to v0, hence

-

$$\frac{v_i}{R} + C\frac{dv_0}{dt} = 0$$
$$\frac{v_i}{RC} + \frac{dv_0}{dt} = 0$$

Make v_0 the subject, by

$$\frac{dv_0}{dt} = -\frac{v_i}{RC}$$
$$\int \frac{dv_0}{dt}\ dt = -\int \frac{v_i}{RC}\ dt$$
$$v_0 = -\int \frac{v_i}{RC}\ dt$$
$$v_0 = -\frac{1}{RC}\int v_i\ dt$$

which integrates $v_i(t)$ and amplifies by a gain of $-\frac{1}{RC}$

Differentiator

Consider the setup:

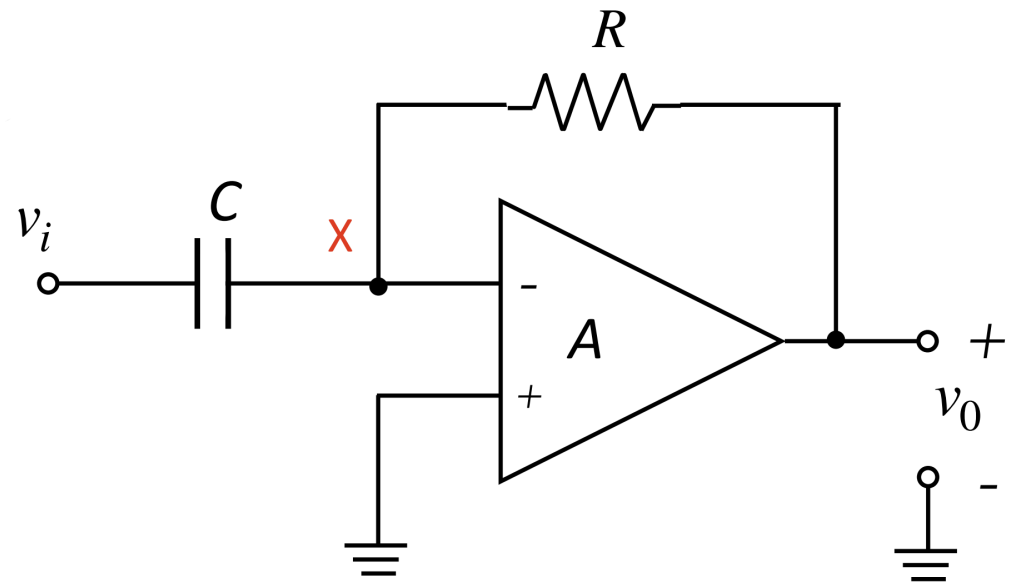

Again, we know that $v_+ = 0$, thus

$$v_+ = v_- = 0$$

Apply KCL at X:

$$i_c(t) + \frac{v_0 - 0}{R} = 0$$
$$i_c(t) + \frac{v_0}{R} = 0$$

Again, we know that

$$i_c(t) = C\frac{dv_i}{dt}$$

Thus,

$$C\frac{dv_i}{dt} = -\frac{v_0}{R}$$
$$v_0 = -RC\frac{dv_i}{dt}$$

which differentiates $v_i(t)$ and amplifies by a gain of $-RC$.