QUIZ 01 REVIEW

FOM

SHEETMETAL

SHEET METAL FEATURES

Feature	Description	Purpose	Process
Flange/Bend	Any fold along an edge		Bending
Tab	Any protrusion from the edge planar to the base		Shearing/Shaving/Blanking
Notch	Any narrow cut out from the edge		Shearing/Shaving/Blanking
Slot/Hole	Any cut out portion in the metal		Punching
Edge Relief	Cut out metal around a flange	Prevents tearing and allows for good material flow	Shearing/Punching/Blanking
Corner Relief	Cut out metal around a corner	Prevents bulging and allows for good material flow	Shearing/Punching/Blanking
Lance	Portion of metal sheared and displaced but without material loss		Shearing/Die Pressing
Louvre	Specific kind of lance where metal is slit and displaced	May be used to mate with flanges for assembly	Shearing/Die Pressing
Emboss	Portion of metal displaced out equally on both sides	for strengthening/stiffening parts, aesthetic purposes	Embossing

Coining	Portion of metal displaced unequally on both sides	similar to emboss	Coining
Gussets	Portion of metal displaced along edge to form a rib like structure	improve strength and stiffness	Die Pressing
Hems	Edge of metal bend onto itself	remove sharp edges, aesthetics	Bending
Semi Piercing	piercing of metal without tearing		Embossing/Die Pressing
Extruded Holes	surrounding metal around hole is extruded past metal base	for self tapping screws	Punching

MANUFACTURING METHODS

Method	Purpose	Action
Shearing	Tearing a piece of sheet metal	vertical force causes plastic deformation, fracture, then shearing
Shaving	Deburring metal edges for smoothness and dimensional accuracy	vertical force removes burrs from shearing, minimal material removal
Slitting	Tearing wide coil into thinner coils of metal	coils passed through thin slitter
Punching	cut out unwanted metal portions of a closed contour	punch cuts into sheet metal and die
Blanking	cut out desired portion from metal of a closed contour	punch cuts into sheet metal and die
V Bending	To form a v shaped bend in the middle of the metal	V shaped punch pressed slightly into die (air bending) to define , then fully formed (bottoming)
Edge Bend/ Wipe Bend	To bend an edge of the metal perpendicularly	punch presses on unsupported edge of metal

		to form bend
U Bending	Bend metal into a U shape profile with two right angles	punch forms 2 right angles in metal around punch
Rotary Bending	form acute angle bend	V shaped die swivels into notch to bend metal
Embossing	form indentations of constant thickness	two dies of identical contours displace metal
Coining	form indentations of non constant thickness/different contours	two dies of non identical contours displace metal
Deep Drawing	quickly form containers with die and punch	punch fully pushes metal into die to form container shape

BEND GEOMETRY

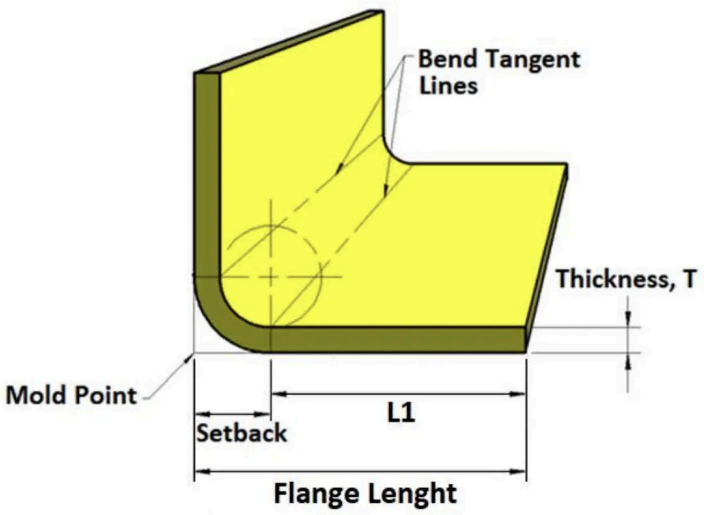

Setback	Amount of “length” the bend radius takes up, or more specifically the distance of the mouldpoint to the tangent lines
Mouldpoint	intersection pt of the flanges outer surface
Developed Length	total length of the flattened metal
Bend Allowance	length dedicated for the bend radius

$$BA = \frac{\theta^\circ}{360} \times 2\pi(R + kT)$$
$$\theta_{sa} = \frac{1}{2}(180 - \theta)$$
$$\text{Setback} = \frac{R + T}{\tan(\theta_{sa})} \Rightarrow \text{Setback} = R + T \ [\theta_{sa} = 90^\circ]$$

BEND CONSIDERATIONS

Consideration	Purpose	Good Practise
Grain Direction	Grains are distorted in one direction due to cold working, which may cause directional strength	grain direction minimum 45 degrees to bend (roll) direction, max perpendicular.
Cut Edge Quality	Outer radius may fracture under bending due to tension	Reblanking to be done on outer radius to remove burrs
Bend Radius	Enough bend radius must be given to reduce cracking of the metal	allow enough bending depending on the thickness, material, and bend angle
Spring Back	Metal has some elasticity and will spring back from the bend angle slightly.	Apply techniques like overbending, corner setting with coining

DESIGN CONSIDERATIONS

Slots & Holes	Ensure slots and holes are sufficiently far from edges and bends, and slots are not too thin and long
Tabs & Notches	Ensure tabs and notches are not too thin or long
Dimensioning	Dimension overall lengths, except for embossments where dimension from top surface to emboss
Bending	Ensure flange bent is 90 degrees to base flange
Bend Relief	Avoid thin reliefs/tears/triangular reliefs, prefer reliefs of at least 2T width, or provide extra tab as relief

Corner Relief	Use corner reliefs for good material flow, min 2T radius for circular relief
Bend Bulging	around bends, small concavity prevents bulging at bends
Tab & Slots	Provide sufficient tab clearance from slot (min 2T)

REV ENG

RE PROCESS

Scanning >> Processing Point Data >> Application of Data (e.g. CAD Model) >> Prototyping

SCANNING PROCESS

Acquisition, Alignment, Mesh Generation, Post Processing (to make the model complete), Simplification (to make the model better)

HARDWARE

	Use	Good	Bad
contact methods		high accuracy, low cost, can measure deep recesses, works with any solid object regadrless of color	slower, does not work with deformable objects
hard probes	measures acoordinates by letting probe settle on surface to be collected	cheap, simple, easy	slow, accuracy is dependent on operator
touch trigger probes	measures coordinates without settling, indicated by electrical output, via piezo or strain gauges	rapid, reliable, accurate due to either piezo sensors reduce stylus bending or strain gauges allow consistent force	only works with rectalinear shapes
analog probes	measures a continuum of points	able to measure curved surfaces and contours	more data collected

Non Contact methods			
Triangulation	takes light and camera data to determine position of points via triangulating source pts	most common	
Structured Light & Stereoscopy	known light pattern shined on surface and camera captrues and triangulates poitns	high data acquisition rate, quick, can capture color/texture if needed	
interferometry	striped patterms shined to form moire patterns to capture contours, where pattern proportional to contour height	higher accuracy, better for smaller objects	low range, worse accuracy for larger objects
Cross sectional Scanning	part is filled in resin and machined to expose each section for CCD cameras to use edge detection algs.	works with wide range of machniable matls, fast, repeatable, accurate	part is destroyed

- 3DP
  - PROCESS
    - CAD MODEL
    - cad model is created with cad software or reverse engineering
    - CAD TO STL
    - cad model is converted into stl file by tesselation of triangles.
    - stl file stores array of triangle vertices and normal vector
    - alternative is 3mf with more data like print settings and print time, while having a lesser file size
    - SLICING
      - converting each contour slice of a model into gcode
      - slice thickness controls print time and quality
      - supports may be added for overhangs
    - PRINTING

prints in layers from top to bottom

POST PROCESSING

further processes like removing supports, polishing, priming, sanding, painting, etc.

METHODS

	FDM	SLA/Digi Light Procc	SLS	MJ
Working Principle	thermoplastic isheated and extruded onto build plate	resin is cured with laser or light projection onto build plate	CO2 laser selectively sinters powder layer	photopolymer dropped to form a layer to be cured with UV light
Extra Steps	1.75 or 3mm filament fed through 0.4mm nozzle to be extruded on print bed	print bed moves up as layers are cured. supports often needed due to being printed at angles to reduce stress	powder bed is heated before sintering, then after sintering is cooled and cleaned out	multiple print heads jet onto build plate, supports are water soluble to be washed
Matls	thermoplastics, PLA, PETG, ABS, TPU, PC	resin based plastics	Nylon, TPU, carbon filled, glass filled, PA11	Photopolymers
Goods	quick, cheap, simple	high accuracy, good finish,	intricate shapes w/o supports, good mechanical properties	higher accuracy & full detail, full color and multi material
Bads	anisotropic, low dimensional accuracy	brittle, degrades under sunlight, support marks need to be removed	higher cost, slow time, porosity and grainy surface	degrades over time, high cost, brittle

FDM EXTRAS

Thing	increase/why
layer height	lower quality/faster print
supports	supports overhangs
infill & shell thickness	stronger/slower print

warping	differential cooling, more prominent on ABS than PLA
layer adhesion	insufficient heating/pressure with bedplate or with layers

design things: splitting model, orienting part (for better print or strength), optimising topology