Resistance & Ohms Law

Resistance

Resistance is the hindrance of the flow of electrons

The resistance of a material is found as so:

$$R = \frac{\rho l}{A}$$

Resistivity is dependent on the properties of the material, and other external conditions like temperature (temp increases, resistivity increases) resistivity is in Ωm.

Resistor Colour Code

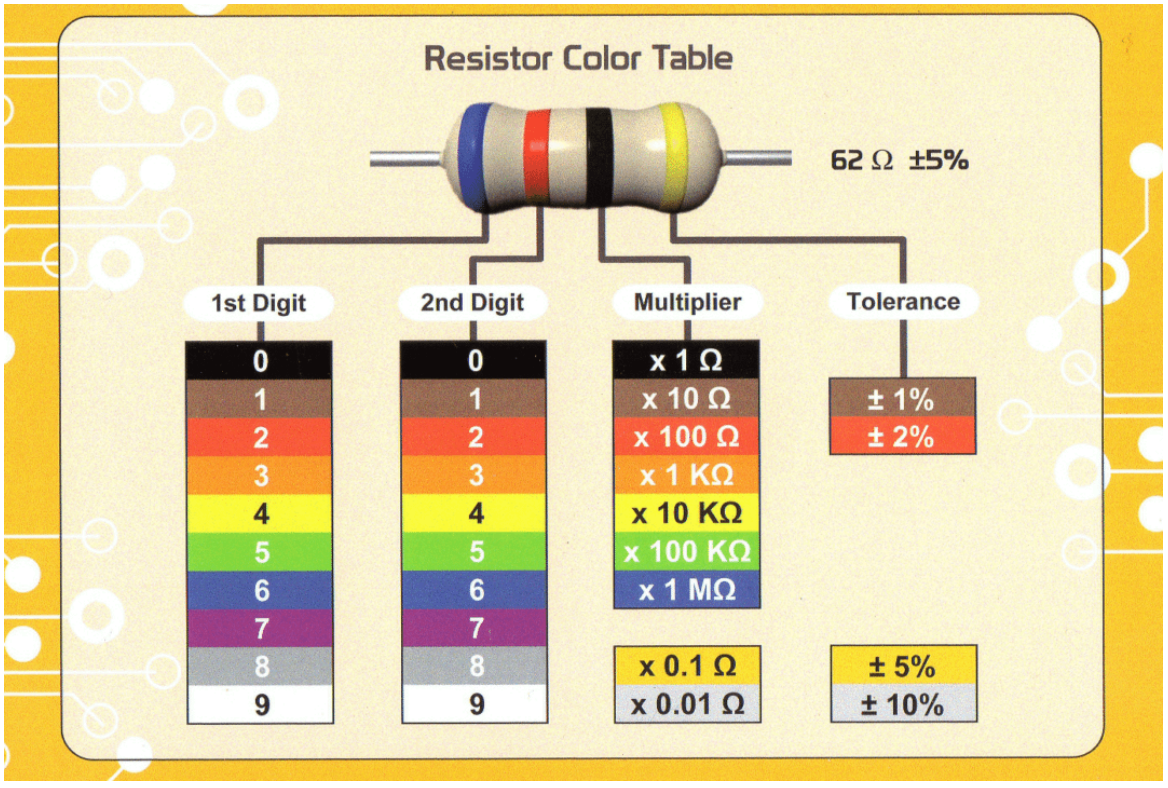

each band will have 1 out of the 9 colours, each representing a number (excluding gold and silver. For a resistor of wxyz, its resistance is $wx \times 10^y \pm z\%$. z will either be 5% or 10 %, being gold and silver respectively.

**hold the silver/gold/ gap on the right

Ground & Reference Ground

Ground usually refers to the negative terminal of a circuit.

Usually, voltage is measured across two points, however if we let one point be the ground (which we let it be 0V), we can measure the voltage at a point, respect to the ground.

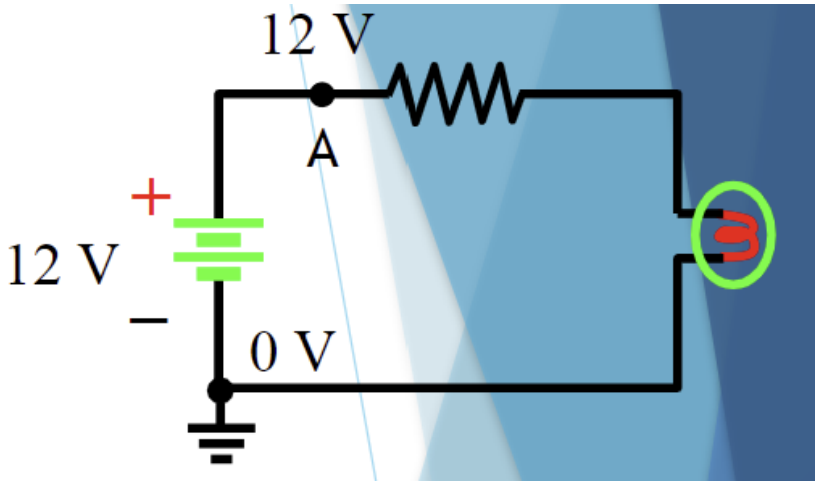

In this circuit, the voltage at A respect to ground is 12V (can omit saying respect to ground)

Ohms Law

thats craz y bro ahahahahd

$$V = IR, R = \frac{V}{I}, I = \frac{V}{R}$$

IV & IR graphs and relationships, Conductance

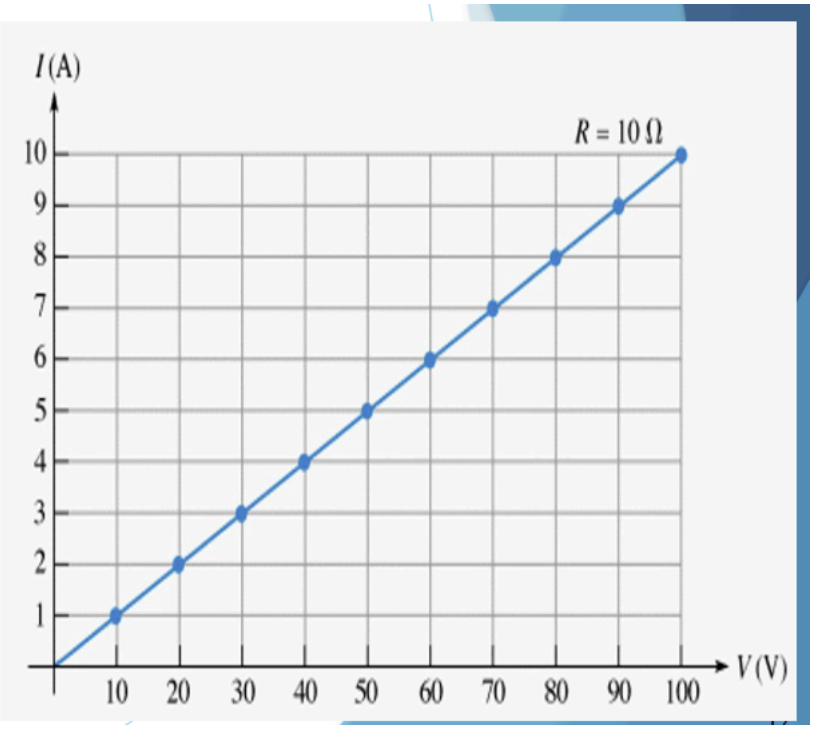

current is directly proportional to voltage

$$V \propto I, as\ V = (R)I$$

gradient of graph represents conductance (how well a material conducts electricity.)

$$\text{conductance}, G = \frac{1}{R}$$

conductance is inverse of resistance, the higher the resistance, the less it can conduct electricity.

conductance is in unit siemen [S].

Likewise, for IV graphs, IR graphs will be a inverse proportion graph

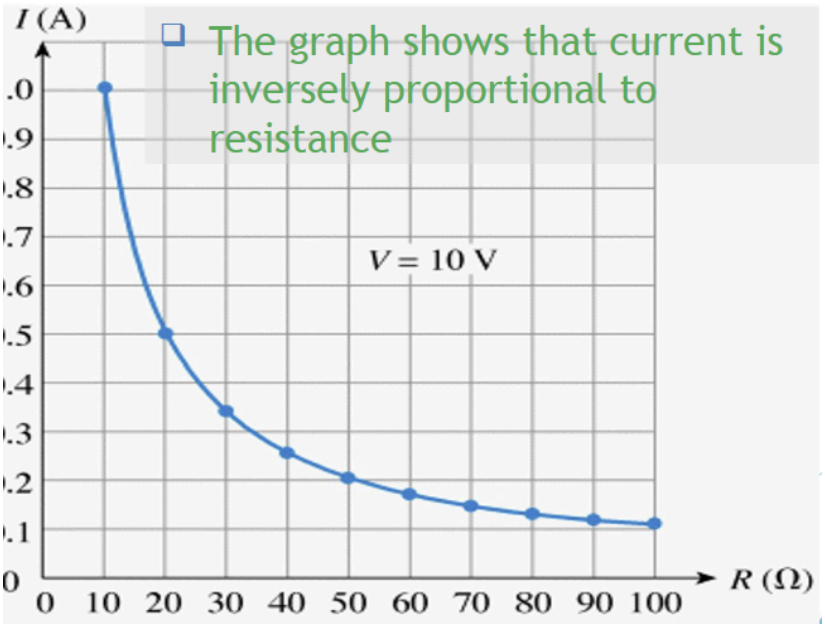

thats crazy bro (because of $I = \frac{V}{R}$, V stays constant, so $I \propto R^{-1}$)