Sensors & Signal Controlling

Sensor Classification & Metrics

Sensors are used to measure different physical quantities, by utilising different operating principles to measure the desired quantity. The electrical output may be either an analog or digital output, and the sensor itself may be passive (requires external power) or generative (produces own voltage/power).

We use different metrics to evaluate the performance of a sensor:

Sensitivity

A measure of how much the output changes over a change in input, which can be expressed as

$$\text{Sensitivity} = \frac{\Delta \text{Output}}{\Delta \text{Input}}$$

Notice how this is a discrete version of the derivative, thus sensitivity is the slope of the input-output graph. The input-output graph is also known as the calibration graph.

Thus, if we are given a function of how the electrical output varies with the measured physical quantity, we can take the derivative to determine sensitivity at a point.

A higher sensitivity will allow for detection of smaller changes, but this makes it more susceptible to noise.

Linearity

A measure of how close the calibration curve is to a specified line, in a given range.

Some sensors may have non linear calibration curves, which will be harder to calibrate or may introduce errors. Thus, quantifying how linear/non linear it is can give insights into how much error it would introduce or how hard it will be to calibrate.

Usually, we express it as non-linearity, as a percentage of how far the curve deviates from the line. and non-linearity is usually the maximum

deviation. Hence, a curve that deviates by at most 2% of the line will have non-linearity of 2%.

Range, Response Time, Stability/Drift, Hysteresis

Range is the measure of the minimum and maximum values of the quantity measured.

Response time is how long it takes for the sensor to respond to a change in input.

Stability, also known as Drift, is how well a sensor can maintain a constant output under constant input conditions.

Hysteresis is the measure of the difference in sensor output for a change in sensor input, or how much the change in output “lags behind” the change in input (hysteresis curve in PEEE1, how much the magnetisation lags due to a change in magnetising force)

Monotonicity

Mathematically, a monotonic function is a function that is always increasing or decreasing, or inversely a non-decreasing or non-increasing function.

Generally, this means that a monotonic function is one-to-one (assuming no constant sections), thus if the calibration curve is monotonic, when we are given an electronic reading like voltage from a sensor, the physical quantity measured can be uniquely determined.

On the other hand, non-monotonic calibration curves do not have this advantage.

Accuracy, Precision and Resolution

Accuracy is how close the measured value is to the true/absolute value.

We typically quantify this by the error, that is

$$\text{Absolute Error} = \text{Result} - \text{True Value}$$
$$\text{Relative Error} = \frac{\text{Absolute Error}}{\text{True Value}}$$

Resolution is the smallest change in the input needed to produce a measurable change in the output. If the increment is from 0, it is also called the threshold.

Precision is a measure of how close the different values are, or the agreement between different values. Two terms that closely relate to precision are Repeatability, the precision of measurements over a short interval, and Reproducibility, precision of measurements over a long interval, or performed by a different operator, or with different instruments.

- Sensor Types
  - Resistive Type Sensors
    - Potentiometers
      - Potentiometers consist of a resistive track and wiper, and voltage or resistance can be measured to find the location of the wiper along the track.
      - For a resistive track of uniform resistance R and length L, when the wiper is a distance d away and a voltage Vs is applied to the whole track, the voltage from one end to the wiper is

$$V = \frac{d}{L} V_s$$

      - Potentiometers can be either linear or rotary, varied by the type of track used. Rotary potentiometers can also be multi-turns instead of a single track (single turn)
      - The resistive material used can be either carbon film, which although is compact, cheap and widely available, has an average tolerance, high temperature coefficient and supports limited power. The resistive track may also be wire-wound, giving higher precision, power and lower temperature coefficient, however has a lower resolution, can be bulky, and is expensive.
    - Resistance Temperature Detectors (RTDs)
      - A type of sensor that measures temperature based on the resistance of a piece of metal, typically platinum. The metal wire is usually wrapped around a ceramic/glass core or by depositing the metal on a substrate.
      - Other than platinum, nickel may also be used, with Pt100 being the most common sensor.

High accuracy, repeatability, stability and linearity is achieved, with a wide range of measurable temperatures, however they are expensive, fairly large and have slower response due to the inorganic material.

The resistance of the RTD at a temperature T can be found by

$$R(T) = R_o \left(1 + \sum_{i=1}^{n} \alpha_i (T - T_o)^n\right)$$

where To and Ro is a reference temperature and the resistance of the RTD at the reference temperature. For example, Pt100 has a reference temperature of 0C, giving the reference resistance of 100ohms. The alpha terms are the coefficients of resistivity, which can be determined experimentally.

In small ranges, the coefficients become small and the function can be linearised as

$$R(T) = R_o \left(1 + \alpha_1 (T - T_0)\right)$$

Thermistor

Another type of temperature sensor, however made with semiconductors instead, allowing for much more significant changes in resistance. Different semiconductors used can allow for different relationships in temperature and resistance, giving either a negative temperature coefficient (NTC), which means as temp increases resistance decreases, or a positive temperature coefficient (PTC), giving the opposite relationship, which is often not used.

Advantages	Disadvantages
• High resistance (hence minimises lead-wire problems) • High sensitivity • Fast response time • Small size (0.1mm diameter) • Low cost • Available in a wide variety of shapes and sizes	• Highly non-linear response and so need careful calibration or lookup table or external compensation circuitry • Limited temperature range (-50°C to +150°C)

Despite this, they are used for most temperature sensor applications, like digital thermometers.

There are two common governing equations for NTC thermistors, the Steinhart-Hart Equation:

$$\frac{1}{T} = A + B\ln(R) + C\left(\ln(R)\right)^3$$

and another one of R as a function of temperature:

$$R(T) = R_0 e^{\beta\left(\frac{1}{T} - \frac{1}{T_o}\right)}$$

A, B, C and β are constants that are either determined experimentally or given by the manufacturer (usually only β, given in K). Ro and To are reference values said earlier in RTDs.

These two equations can have $\frac{dR}{dT}$ found to determine the sensitivity, either as a function of temperature or at a specific temperature.

Light Dependent Resistors (LDRs)

A resistor whos resistance depends on the light received. Typically, lower light levels cause higher resistance values up to megaohms (basically an open circuit), and vice versa for higher light levels.

Advantages	**Disadvantages**
• Low cost • Widely available • Simple to use • Wide light sensitivities • High resistance	• Slow response time (milliseconds) • Nonlinear output • Sensitive to environmental factors such as temperature or humidity

Strain Gauges

Strain sensors measure the deformation of an object by making use of the fact that a resistive wire's resistance changes when its length does. Typically, strain sensors consist of a wire or thin foil usually made with constantan or nichrome in a grid pattern to maximise sensitivity, connected to a thin insulating material known as backing.

A measure of sensitivity of strain gauges is the gauge factor, given as

$$GF = \frac{\frac{\Delta R}{R}}{\frac{\Delta L}{L}} = \frac{\frac{\Delta R}{R}}{\varepsilon}$$

where R is the original, or nominal resistance, typically around 120 Ohms.

For the most common type of strain gauges (foil type), GF is around 2, but other types like those using semiconductors have higher GF values, however is more influenced by temperatures.

Advantages	Disadvantages
• High accuracy & sensitivity • Inexpensive & fast response (μs) • Compact & lightweight • Wide application range: suitable for measurements of stress, strain, force, pressure, and weight • Versatile: can be applied to a wide range of material - metal, concrete, composite etc	• Sensitive to environmental factors (e.g. temperature) and may need compensation circuits • Require careful bonding • Small output signal (need circuit like Wheatstone Bridge) • Must be calibrated for accurate results 40

When implementing these sensors, the resistive metal should be properly bonded to the backing to ensure all the deformation is transmitted, and the sensor should only be worked in the elastic range. Another external factor to take note of is temperature changes in the environment, as they affect both the resistivity of the wire and the amount of extension.

Firstly, a change in temperature directly affects the resistivity of the wire, which can be measured by the temperature coefficient of resistance, given as

$$\gamma = \frac{1}{R_0}\frac{\Delta R}{\Delta T}\ [\Omega/\Omega^\circ C]$$

This gives a measure of how much the resistance changes for a change in temperature, and thus $\gamma \Delta T$ gives a measure of the change in resistance for a given change in temperature. Typically, the coefficient is positive for most values but negative for semiconductors. Note that this directly influences the resistance of the sensor.

The other effect of temperature is thermal expansion of the sensor and the material being measured. Typically, the sensor and material will not expand at the same rate, however both the sensor and

material must extend by the same amount as they are bonded, thus there is some additional strain introduced due to the difference in thermal expansion. We can find the strain due to thermal expansion as

$$\varepsilon_{exp} = \beta\Delta T - \alpha\Delta T$$

where beta is the thermal expansion coefficient of the specimen and alpha is the thermal expansion coefficient of the sensor, in units $cm/cm^{\circ}C$.

This indirect stress will still be measured even though it is not due to an applied load, introduced as an error. We can combine the two effects from temperature to find the total change in resistance, as

$$\frac{\Delta R}{R} = GF(\varepsilon_{load}) + GF(\varepsilon_{exp}) + \gamma\Delta T$$
$$\frac{\Delta R}{R} = GF\varepsilon_{load} + GF(\beta - \alpha)\Delta T + \gamma\Delta T$$

The errors due to direct temperature change can be minimised with dummy sensors to measure only the direct temperature change error, while errors due to thermal expansion can be done by matching the two expansion coefficients as closely as possible (i.e ensure $\beta - \alpha \approx 0$).

Generative Type Sensors

Thermocouple

A type of temperature sensor, by measuring the potential difference produced between two different temperature zones, with two dissimilar metals joined together as one junction. The thermocouple circuit essentially acts as a battery, or more specifically, a voltage source with some inherent resistance in series.

Advantages	Disadvantages
• Wide temperature range • Rugged and durable (can withstand harsh environment) • Inexpensive • Fast response (0.1s for exposed junction up to 20+ s for sheathed probe) • No external excitation needed - it generates its own signal	• Low output voltage - requires amplification • Nonlinear output - requires calibration • Susceptible to electromagnetic interference • Cold junction compensation needed

Thermocouples work on three main principles:

Law of Homogeneous Metals:

A homogeneous metal cannot produce a potential difference due to a temperature difference.

Law of Intermediate Metals

A third metal inserted into the thermocouple circuit does not affect it as long as the terminals of the third metal are at the same temperature.

This allows for the use of components like voltmeters to measure the voltage produced by the circuit.

Law of Intermediate Temperatures

For three temperatures, T1 to T3, and given that $E_o|_{T_1/T_2}$ is the voltage produced when the temperature gradient is T1 to T2, the law of intermediate temperatures is given as

$$E_o|_{T_1/T_2} = E_o|_{T_1/T_3} + E_o|_{T_3/T_2}$$

Which allows the use of non 0C cold terminal temperatures.

Typically, the voltage produced in mV due to a certain temperature is determined from a table, but the reverse must have linear interpolation done to accurately determine the temperature.

Piezoelectric

A piezoelectric transducer works by converting mechanical stress into electrical charges, or vice versa. The conversion of stress to charges is called the piezoelectric effect, while the reverse is called the

inverse piezoelectric effect. The direct effect is used in sensors and microphones, while the inverse is used for precision actuators, and speakers

Advantages	Disadvantages
• No external power source n needed • High sensitivity and fast response - ideal for dynamic measurements • Wide range -used for vibration measurements in jet engines • Small form factor	• Cannot measure static force • High output impedance - requires careful signal conditioning • Subjected to temperature changes

Miscellaneous Sensors

Limit Switches

quite literally a button

Photoelectric Sensors

light sensor in reflective mode, measures presence of object or color if needed

Capacitive Sensors

detects changes in capacitance for either conductivity, useful in touch screens

Inductive Sensors

measures change in magnetic field produced (eddy current testing)

Hall Effect Sensors

measures magnetic fields and generates voltage, used in measuring wheel rpms

Advantages	Disadvantages
• Non-contact • Durable in harsh environment • Fast response, hence can be used for RPM detection • Compact and low power	• Requires a magnetic field • Small output signal • Affected by external electromagnetic fields

Signal Conditioning

Signal conditioning is a step to reformat the output signal to be more suitable for collection and analysis. Typically, they involve converting signals, like from resistance to voltage, amplifying signals, and minimising noise.

Resistive Type Sensors

Say we wanted to use a resistive sensor, like a potentiometer. We cannot directly connect it to a power source as when the resistive sensor has a low resistance, we risk shorting the power source.

Instead, we could use a voltage divider with a resistance R_0 in series. If the resistance of the sensor is a function of the physical quantity T, we can say that $R_s = f(T)$, then the voltage across the sensor is

$$V = \frac{R_s}{R_s + R} \times V_p$$

The resistance R needs to be picked properly, as too small of R causes $V \approx V_p$, while too big of R causes the change to be too small. Usually, R is picked to be close to the average expected resistance of Rs.

While this method does work, there is an inherent DC bias; the change in voltage due to the sensor has a much lower significance compared to the nominal voltage due to the nominal resistance of the sensor.

We can represent Rs by a nominal resistance and a function causing the variance of the resistance from the nominal resistance, that is

$$R_s = R_0 + R_\delta(T)$$

Hence, the voltage divider equation is now

$$V = \frac{R_0 + R_\delta(T)}{R + R_0 + R_\delta(T)} \times V_p$$

which can be re-expressed as

$$V = \frac{R_0 + R_\delta(T)}{(R + R_0)\left(1 + \frac{R_\delta(T)}{R+R_0}\right)} \times V_p$$
$$V = \frac{R_0 + R_\delta(T)}{(R + R_0)} \times \left(1 + \frac{R_\delta(T)}{R + R_0}\right)^{-1} \times V_p$$

Using the Maclaurin's series to represent the binomial theorem, that is

$$(1+x)^n = \sum_{k=0}^{\infty} \binom{n}{k} x^k$$
$$= \sum_{k=0}^{\infty} \frac{n(n-1)(n-2)...(n-k+1)}{k!} x^k$$

and thus we get an infinite series instead of the reciprocal, as

$$V = \frac{R_0 + R_\delta(T)}{(R+R_0)} \times V_p \times \left[1 - \frac{R_\delta(T)}{R+R_0} + \left(\frac{R_\delta(T)}{R+R_0}\right)^2 + ...\right]$$

and since the higher order terms will tend to 0 as $R_\delta(T)$ is small,

$$V \approx \frac{R_0 + R_\delta(T)}{R+R_0} \times V_p \times \left(1 - \frac{R_\delta(T)}{R+R_0}\right)$$

which can be expanded to

$$V \approx \left(\frac{R_0 + R_\delta(T)}{R+R_0} - \frac{R_\delta(T)(R_0 + R_\delta(T))}{(R+R_0)^2}\right) \times V_p$$
$$V \approx \left(\frac{R_0 + R_\delta(T)}{R+R_0} - \frac{R_\delta(T)R_0 + R_\delta(T)^2}{(R+R_0)^2}\right) \times V_p$$
$$V \approx \left(\frac{R_0}{R+R_0} + \frac{R_\delta(T)}{R+R_0} - \frac{R_\delta(T)R_0}{(R+R_0)^2} - \frac{R_\delta(T)^2}{(R+R_0)^2}\right) \times V_p$$

Neglecting higher powers of R_δ, and by factorising the remaining R_δ terms, we get

$$V \approx \left(\frac{R_0}{R+R_0} + R_\delta(T)\left(\frac{1}{R+R_0} - \frac{R_0}{(R+R_0)^2}\right)\right) \times V_p$$
$$V \approx \left(\frac{R_0}{R+R_0} + R_\delta(T)\left(\frac{R+R_0}{(R+R_0)^2} - \frac{R_0}{(R+R_0)^2}\right)\right) \times V_p$$
$$V \approx \left(\frac{R_0}{R+R_0} + R_\delta(T)\frac{R}{(R+R_0)^2}\right) \times V_p$$
$$V \approx \frac{V_p R_0}{R+R_0} + \frac{V_p R}{(R+R_0)^2} R_\delta(T)$$

As $R_\delta(T)$ is very small, we can see that the variance in the voltage will be much smaller than the large DC offset.

Wheatstone Bridge

To mitigate the large DC offset from voltage dividers, we can use a Wheatstone bridge to cancel out the DC component.

The Wheatstone bridge consists of two parallel voltage dividers and measures the voltage between them.

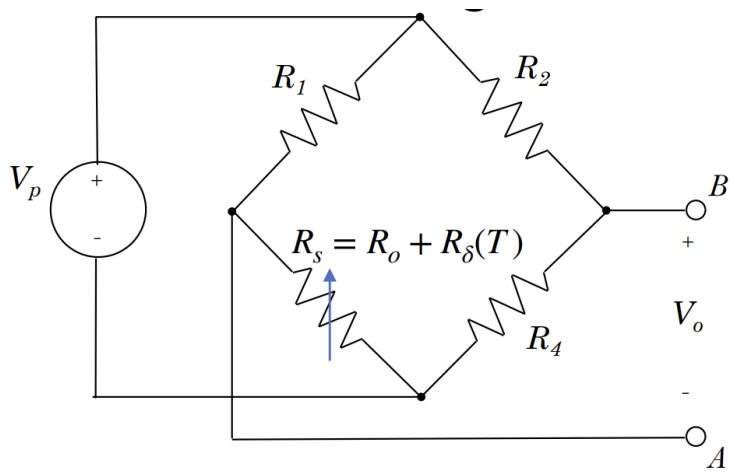

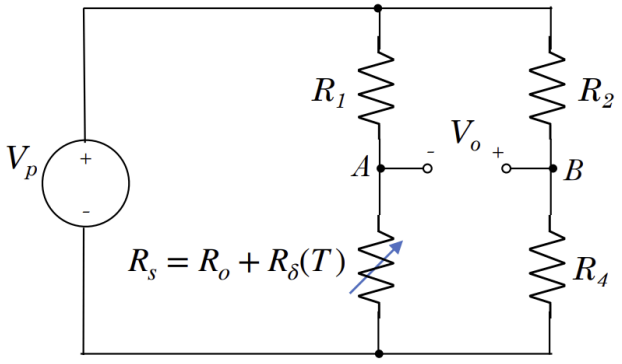

Thus, if the sensor is on the bottom left, we can form an expression for the voltage Vo measured, as

$$V_o = V_B - V_a$$

which in terms of resistances, is

$$V_o = \frac{R_4 V_p}{R_2 + R_4} - \frac{V_p R_0}{R + R_0} - \frac{V_p R}{(R + R_0)^2} R_\delta(T)$$

Vb can be manipulated to cancel out the DC offset, by having $R_4 = R_0$ and $R_2 = R$, thus

$$V_o = -\frac{V_p R}{(R + R_0)^2} R_\delta(T)$$

which is how the DC offset can be removed.

To pick the best value for R, we can maximise the sensitivity.

Let $x(T) = \frac{R_\delta(T)}{R_0}$, representing the fractional change or the change in the input. Thus, the resulting output voltage is

$$V_o = -\frac{V_p R}{(R+R_0)^2} R_\delta(T) \Rightarrow V_o = -\frac{V_p R R_0}{(R+R_0)^2} x(T)$$

Factorise out R from the denominator:

$$V_o = -\frac{V_p \cancel{R} R_0}{R^{\cancel{2}}\left(1+\frac{R_0}{R}\right)^2} x(T)$$
$$V_o = -\frac{V_p R_0}{R\left(1+\frac{R_0}{R}\right)^2} x(T)$$

Then, let $K = \frac{R_0}{R}$. This gives

$$V_o = -\frac{V_p K}{(1+K)^2} x(T)$$

K is an arbitrary variable. This gives the change in output voltage as a function of x(T). Thus, the expression for sensitivity in terms of K is

$$S = \frac{\frac{V_p K}{(1+K)^2} \cancel{x(T)}}{\cancel{x(T)}} = \frac{V_p K}{(1+K)^2}$$

(negative sign dropped for clarity)

This expression actually works in general for all Wheatstone bridges, where $K = \frac{R_4}{R_1}$ (left arm bottom resistor/left arm top resistor).

Thus, maximum sensitivity is when $S'(K) = 0$, hence

$$S'(K) = \frac{V_p(1+K)^2 - 2(1+K)(V_pK)}{(1+K)^4}$$
$$S'(K) = \frac{V_p(1+2K+K^2) - 2V_p(K+K^2)}{(1+K)^4}$$
$$S'(K) = \frac{V_p(1+2K+K^2) - V_p(2K+2K^2)}{(1+K)^4}$$
$$S'(K) = \frac{V_p(1+2K+K^2-2K-2K^2)}{(1+K)^4}$$
$$S'(K) = \frac{V_p(1-K^2)}{(1+K)^4}$$

Hence, at $S'(K) = 0$,

$$1 - K^2 = 0 \Rightarrow K = \pm 1 = 1 \text{ (rej. } K = -1)$$

Thus, maximum sensitivity is reached when $R = R_0$, when the nominal resistance of the sensor matches the left upper resistance. If we subtitute back into our equation for Vo, we get that

$$V_o = \frac{V_p}{4} \times \frac{\Delta R}{R_0} = \frac{1}{4} \times \frac{V_p}{R_0} \times R_\delta(T)$$

Balanced Wheatstone Bridge

The previous example had the Wheatstone bridge in deflection mode, where the voltage across the two points represented the measured quantity. However, the Wheatstone bridge can be setup to represent the *change* in measured quantity, by setting the voltage to be initially at 0.

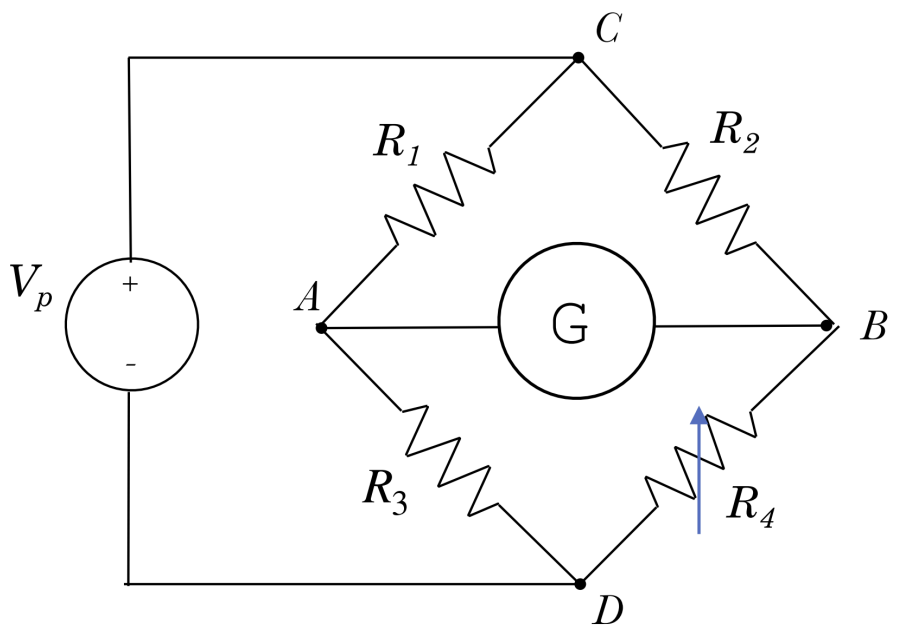

To set the output voltage as 0, we want $v_a = v_b$. Hence, the "proportion of resistance" of one voltage divider must be equal to the other. In other words,

$$\begin{gathered}\frac{R_3}{R_1 + R_3} = \frac{R_4}{R_2 + R_4} \\ (R_3)(R_2 + R_4) = R_4(R_1 + R_3) \\ R_3R_2 + \cancel{R_3R_4} = R_1R_4 + \cancel{R_3R_4} \\ R_3R_2 = R_1R_4\end{gathered}$$

which shows that the products of directly opposite resistors must be equal.

and thus if one of the resistors is unknown and the Wheatstone bridge is in a balanced state, it can be determined by the other 3.

General Wheatstone Bridge

Now consider the general case of a Wheatstone bridge, where we want to find vo.

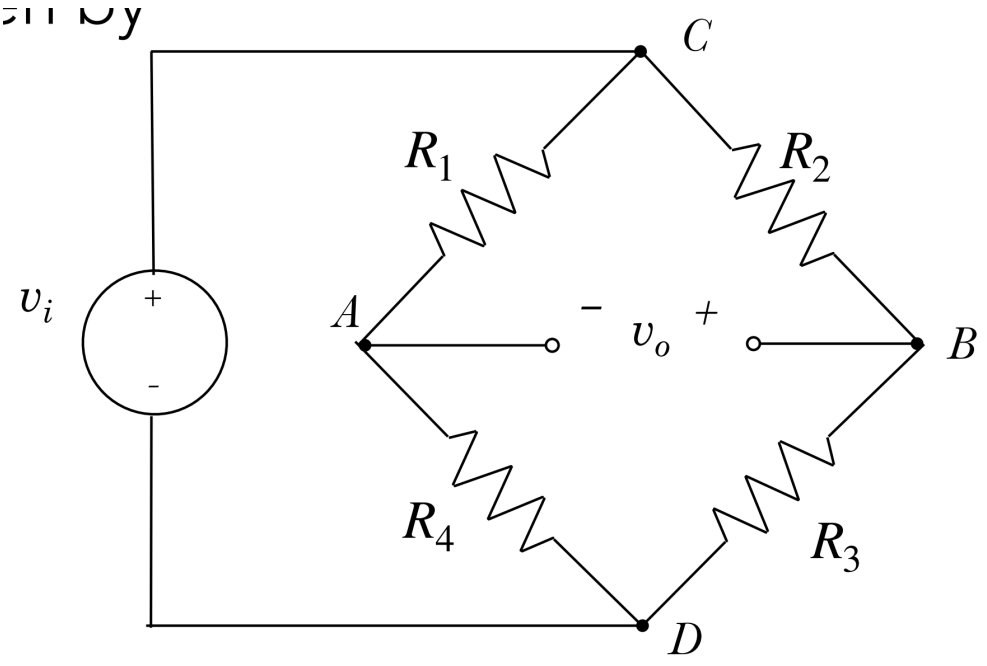

We know that

$$v_o = v_i \left(\frac{R_3}{R_2 + R_3} - \frac{R_4}{R_1 + R_4} \right)$$

If we assume that every resistor was a sensor, we can replace each R_i term with $R_i + \Delta R_i$. hence,

$$v_o = v_i \left(\frac{R_3 + \Delta R_3}{R_2 + \Delta R_2 + R_3 + \Delta R_3} - \frac{R_4 + \Delta R_4}{R_1 + \Delta R_1 + R_4 + \Delta R_4} \right)$$

Which we can combine and simplify, by neglecting higher powers of ΔR_i, to get

$$v_o = v_i \times \frac{k}{(k+1)^2} \times \left(\frac{\Delta R_1}{R_1} - \frac{\Delta R_2}{R_2} + \frac{\Delta R_3}{R_3} - \frac{\Delta R_4}{R_4} \right)$$

where $k = \frac{R_4}{R_1} = \frac{R_3}{R_2}$, and R1 through 4 are numbered in a clockwise manner.

This formula is incredibly useful in deciding the location of sensors and dummy resistors.

Since dummy resistors will not have their resistances change, their respective terms are 0. For other resistors that will be replaced by sensors, if they have some positive error, they can be put on R1

and R2 or basically any two terms that cancel out, so as to cancel out the error produced.