Transformers

A transformer consists of 2 coils of wire, where 1 current is powered by AC and the magnetic flux generated induces an AC voltage in the other coil. The coils are usually connected via a ring/core that directs magnetic flux through the core.

Instead of an inductor, where its own generated magnetic filed induces itself (to induce voltage to resist current), the first coil of wire(primary coil) induces another coil (secondary coil) instead, called mutual inductance.

Coupling coefficient

One factor the mutual inductance is affected by is the coupling coefficient. The two coils are also magnetically coupled but electrically isolated, as current cannot flow between the two wires.

The coupling coefficient is a ratio of how much flux is linked per the total flux produced. Thus,

$$k = \frac{\phi_{1-2}}{\phi_1}$$

where ϕ_{1-2} is the flux linked between both coils, and ϕ_1 is the total flux produced by the primary coil. Thus, the more the flux can link, the closer it is to 1, which is the maximum. A transformer that cannot couple has k=0.

Physically, the coupling coefficient depends on how close the coils are, the material of the coil, and the shape/construction of it (e.g. is it laminated)

Mutual Inductance

Mutual inductance is proportional to the geometric mean of each of the coils inductance.

$$L_M = k\sqrt{L_1 L_2}$$

where L1 and L2 are the inductance of the individual coils. k represents the coupling coefficient, a measure of how well magnetic flux is transferred between the two coils.

Mutual inductance can also be found from other physical factors, as so:

$$L_M = \frac{kN_pN_s\mu A}{l}$$

Np and Ns are the number of turns of the primary and secondary coil respectively, mu is the permeability of the core, A is the cross sectional area of the coil, and l is the length of the coil(not the wire used) Notice the similarity between the formula for an inductorL

$$L_{\text{inductor}} = \frac{NN\mu A}{l}$$

Using the same formula for finding the voltage across an inductor, we can apply the formula similarly to find the voltage across the secondary coil.

$$v_i = L_M \frac{di_1}{dt}$$

where i1 is the primary coil current.

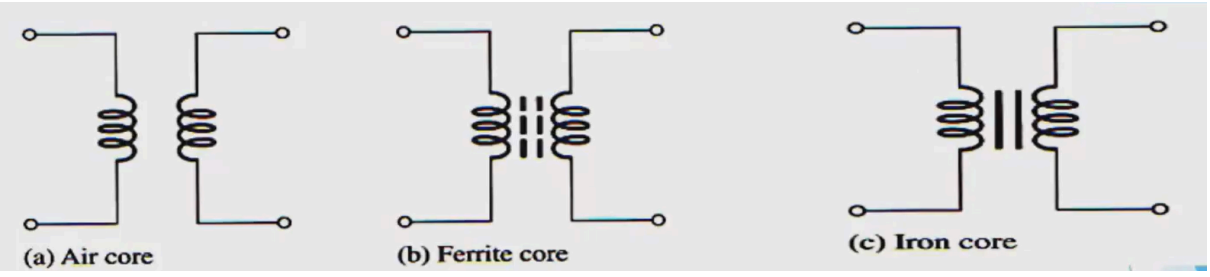

Transformers are drawn as so, with similar symbols to inductors.

Turns Ratio & Power

The turns ratio n can be found as so :

$$n = \frac{N_s}{N_p}$$

The turns ratio influences the input and output voltage:

$$n = \frac{N_s}{N_p} = \frac{V_s}{V_p}$$

When n>1, voltage steps up from the input to output. When n<1, voltage steps down.

One thing about (ideal) transformers is that P_pri = P_sec. Thus,

$$\frac{V_s}{V_p} = \frac{PI_s^{-1}}{PI_p^{-1}} = \left(\frac{I_s}{I_p}\right)^{-1} = \frac{I_p}{I_s}$$

Note the relationship is flipped now. Thus,

$$n = \frac{N_s}{N_p} = \frac{V_s}{V_p} = \frac{I_p}{I_s}$$

Note that power is often lost via eddy currents in the transformer so there will be some loss in energy.

Windings & Phase Dots

Winding direction is important as it also influences the voltage polarity. When the polarities are opposite, the AC input and outputs will be completely out of phase, i.e. opposites/out of phase by 180degrees Thus, we use dots to represent the polarity of the input and output as so:

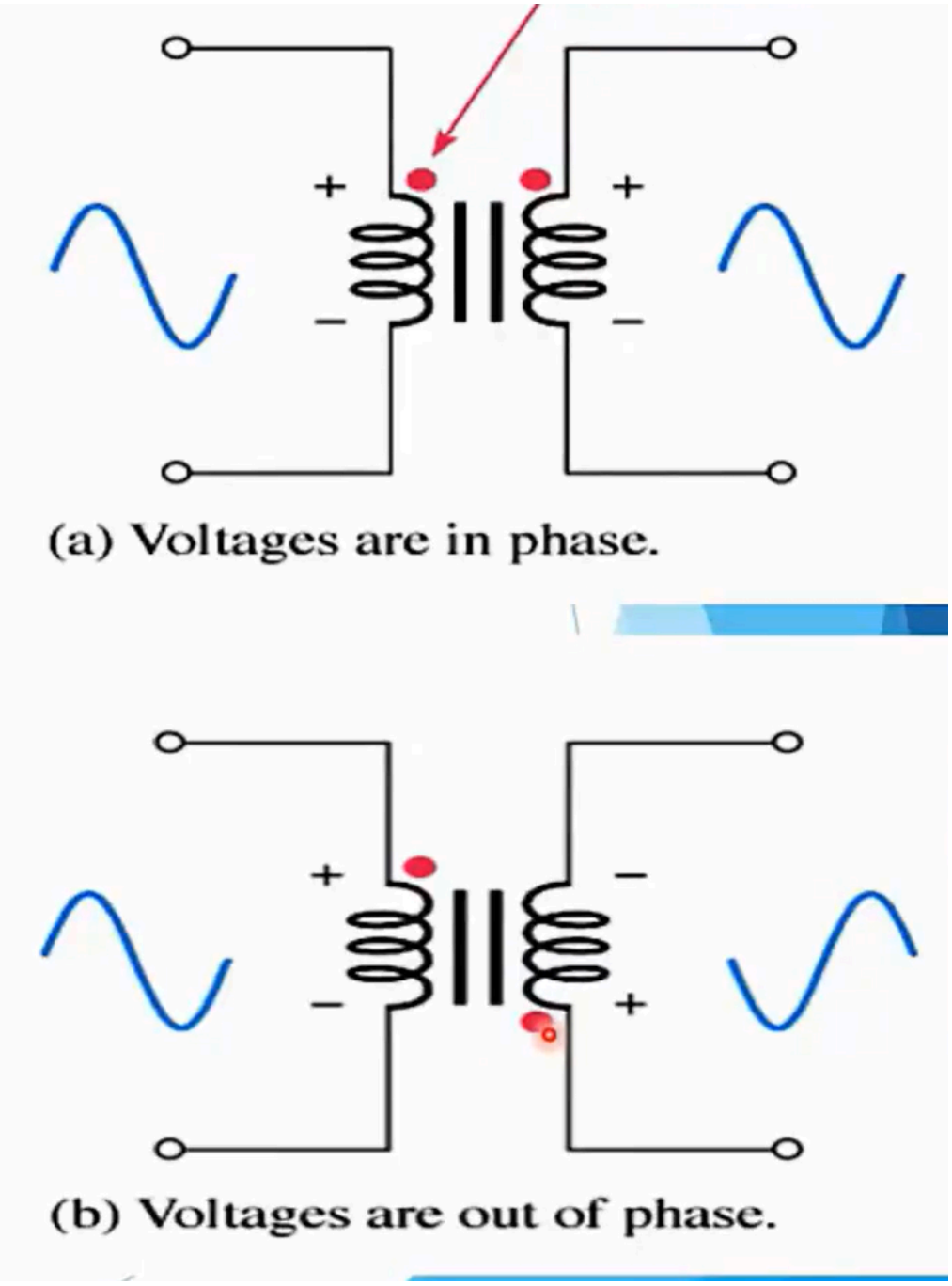

To wind the coils to be in phase, the coils must be mirror images of each other (chiral) i.e. clockwise/anticlockwise