DEPARTMENT OF MECHANICAL AND AEROSPACE ENGINEERING

FINAL PROJECT REPORT for

Development of a low-cost portable scale with a smartphone

by

Mohammad Zeshaan Shahid

Student ID: *1914982*

Supervisor: *Yohan Noh*

Submitted in part fulfilment of the requirements for

the degree of Bachelors of Engineering

in

Mechanical Engineering

APRIL 2023

DECLARATION

I declare that the work in this project was carried out in accordance with the requirements of the University's Regulations and Code of Practice for Taught Programmes and that it has not been submitted for any other academic award. Except where indicated by specific reference in the text, this work is my own work. Work done in collaboration with, or with the assistance of others, is indicated as such. I have identified all material in this dissertation report that is not my own work through appropriate referencing and acknowledgement. Where I have quoted or otherwise incorporated material, which is the work of others, I have included the source in the references. Any views expressed in the dissertation, other than referenced material, are those of the author.

SIGNED: Zeshaan ..... DATE: 01/03/23

ABSTRACT

This project aims to develop a low-cost portable scale using a smartphone. The project is carried out to show that image processing technology can be used as a tool to find the weight of an object. The project was carried out by 3D printing a platform on which a PCB of a webcam was mounted. The webcam would then observe four white markers on a black surface, and when a mass is placed on the platform the size of each marker and the distance of each marker from the middle point can be found using the Image Processing Toolbox on MATLAB. Using this data the mass can be found. In order to calibrate the sensor fixed masses are placed. The main conclusion of this project is that it shows that an image-processing tool can be effectively used to find the mass of an object.

ACKNOWLEDGEMENTS

I would like to thank Professor Yohan Noh for their continued support throughout this project.

TABLE OF CONTENTS

DECLARATION i

ABSTRACT i

KEYWORDS ..... **Error! Bookmark not defined.**

ACKNOWLEDGEMENTS ii

TABLE OF CONTENTS iii

LIST OF FIGURES v

LIST OF TABLES vi

NOMENCLATURE vii

1 Introduction 1

1.1 Context for the project 1

1.2 Aim and objectives for the project 3

2 Literature Review 4

2.1 Introduction 4

2.2 Background 4

2.3 Smartphone-based Measurement Systems 5

2.3.1 Applications of Smartphone-based Measurement Systems 5

2.3.2 Advantages of Smartphone-based Measurement Systems 6

2.3.3 Limitations of Smartphone-based Measurement Systems 6

2.4 Image Processing for Weight Estimation 7

2.4.1 Approaches for Weight Estimation 7

2.4.2 Challenges and Considerations 8

2.5 MATLAB Image Processing Toolbox 9

2.5.1 Key Features and Capabilities 9

2.5.2 Relevance to the Portable Scale Project 10

2.6 Previous Studies 11

3 Methodology 13

3.1 Introduction 13
3.2 Selection of CAD Software and Programming Language 13
3.2.1 Selection of CAD Software 13
3.2.2 Selection of Programming Language 14
3.3 Conceptual design and design refinement 14
3.4 CAD Modelling 17
3.5 FEA 18
3.6 Development of the MATLAB code 23
3.7 Prototype fabrication and testing 25
3.8 Calibration and validation 26
4 Analysis and Results 29
5.1 Interpretation of Results 34
5.2 Significance of the Project 34
5.3 Limitations 36
6.1 Conclusions from the Investigation 37
6.2 Suggestions for Further Work 37
7 References 39
Appendices XLI
Appendix A – Management of the Project XLI
Appendix A.1 Project Gantt Chart XLII
XLII
Appendix B – GUI MATLAB Script XLIII
Appendix C – Plotting MATLAB Script XLVI
Appendix D – Calibration MATLAB Script XLIX
Appendix E – Risk Assessment LII

LIST OF FIGURES

Figure Ref Title Page

Figure 1: Folding picnic table [1] 15
Figure 2: Concept leg designs..... 15
Figure 3: Webcam PCB..... 17
Figure 4: Folding Mechanism and Folding Hinge 17
Figure 5: Main body and leg..... 18
Figure 6: Main body with markers and base raised holes 18
Figure 7: Force and Fixed Support in Ansys Mechanical 19
Figure 8: Total Deformation of Concept Leg 1 19
Figure 9: Total Deformation of Concept Leg 2 19
Figure 10: Total Deformation of Concept Leg 3 20
Figure 11: Total Deformation of Concept Leg 4 20
Figure 12: Equivalent Stress of Concept Leg 1 20
Figure 13: Equivalent Stress of Concept Leg 2 21
Figure 14: Equivalent Stress of Concept Leg 3 21
Figure 15: Complete CAD model 22
Figure 16: Predicted deformation when on Fz is applied..... 22
Figure 17: Predicted deformation when Fz, Mx and My are applied 22
Figure 18: Predicted deformation when Fz and Mx are applied 23
Figure 19: Predicted deformation when Fz and My are applied 23
Figure 20: Graphic showing how the centroid positions are calculated..... 24
Figure 21: Testing of the deformation in different positions..... 26
Figure 22: Webcam image showing the visibility of the four white markers..... 26
Figure 23: Main body with labels of the nine positions 27
Figure 24: Characteristic Curve between the loads Fz, and the pixel count..... 29
Figure 25: Characteristic curve between the loads Fz Mx, and the pixel count..... 29
Figure 26. Characteristic curve between the loads Fz My and the pixel count..... 30
Figure 27. Comparison between real Fz values and estimated Fz..... 30
Figure 28. Comparison between real Fz Mx and estimated Fz Mx (Positive Mx).... 30
Figure 29. Comparison between real Fz Mx and estimated Fz Mx (Negative Mx) .. 31
Figure 30. Comparison between real Fz My and estimated Fz My (Positive My).... 31

Figure 31:. Comparison between real Fz My and estimated Fz My (Negative My) .. 31

LIST OF TABLES

Table Ref Title Page

Table 1:Experimental Configuration of the Applied Loads for Calibration 29
Table 2: Sensor Performance Property: Range, Error and Non-linearity..... 32
Table 3: Sensor Performance: Repeatability and Hysteresis 32
Table 4: Sensor Performance Property: Crosstalk 32

NOMENCLATURE

Abbreviations

CAD – Computer Aided Design

FEA – Finite Element Analysis

3D – Three-Dimensional

PLC – Programmable Logic Controller

RGB – Red, Green, Blue

CNN – Convolutional Neural Network

SVM – Support Vector Machine

HSV – Hue, Saturation, Value

BGR – Blue, Green, Red

MBR – Minimum Bounding Rectangle

GLCM – Grey-Level Co-occurrence Matrix

GUI - Graphical User Interface

1 Introduction

The development of portable weighing scales has become increasingly important in many industries, such as agriculture, food processing, and shipping. These scales allow for accurate and efficient weighing of goods, minimizing the risk of error and reducing costs. However, the cost of traditional weighing scales can be prohibitive for many small businesses and individuals. Additionally, traditional scales can be bulky and difficult to transport, limiting their usefulness in certain contexts. To address these challenges, this dissertation focuses on the development of a low-cost, portable scale that utilizes a smartphone and an image processing tool to accurately measure the mass of objects. By using a smartphone camera and a custom image processing algorithm, this scale offers a low-cost, flexible, and user-friendly solution for measuring the mass of goods in a variety of settings. The research presented in this dissertation aims to demonstrate the feasibility and effectiveness of this approach and to explore the potential applications and benefits of such a technology in various industries.

1.1 Context for the project

This project is relevant to the degree course in Mechanical Engineering because it requires the use of the following:

• CAD Software

• Computer Language

• FEA Software

This project will enhance the strengths of the listed software, all of which are commonly required in the industry.

A CAD software is needed to design the scale's portable folding/unfolding mechanism. A computer language is needed to use an image-processing tool, which will be used to read the number of pixels under the plate of the scale and the distance from the centre point. An FEA software is needed to identify a suitable material and design for the mechanism as it must remain in the elastic region when under loads of up to 5N.

The industrial relevance of this project is that it means people will be able to use this device to weigh things without needing an actual scale. All they need is this device and a smartphone, so unlike traditional small electrical scales, there is no need for any batteries. Instead, all they need is a charged smartphone that has a camera.

The coding language MATLAB will be used because it is based on a matrix data structure which makes it ideal for image processing. Image processing operations that might require many lines of code in other coding languages can be expressed in a single line of MATLAB code.

The CAD software that will be used is Fusion 360. Fusion 360 will be used because of prior knowledge on the software. Other advantages of Fusion 360 are that it has cloud based saving and also has a wide range design tools which makes creating complex geometries easier

The FEA software of choice will be Ansys Workbench as it has a good interface and is easy to use. It also has a wide range of simulation capabilities and advanced material modelling.

There can offer many commercial aspects of this project as having a small portable weighing scale that uses a smartphone and an image processing tool would be:

Convenient: The scale will be able to be easily carried around, making it convenient to weigh small items on the go.

Cost-effectiveness: It can be produced at a lower cost compared to traditional weighing scales

Accuracy: Using an image processing tool the scale can achieve a higher accuracy meaning it can be used for scientific medical and industrial purposes.

Flexibility: The scale can be used with a variety of smartphones and other mobile devices, making it more versatile and adaptable to the needs of various users.

There are current weighing scales which use image processing technology on the market but they tend to use edge detection and pattern recognition rather than observing different markers. Many smartphones do not have the computational power or the memory capacity to perform pattern recognition as it typically involves training a machine learning algorithm.

1.2 Aim and objectives for the project

The aim of this project is to develop a low-cost portable scale that utilizes a smartphone and an image processing tool to accurately measure the mass of objects. The specific aims of this project are:

- To develop an image processing algorithm that accurately measures the mass of objects using a smartphone camera.
- To design and develop a prototype of the portable scale that incorporates the image processing algorithm.
- To evaluate the accuracy and precision of the portable scale in comparison to traditional weighing scales.
- To explore the potential applications of the portable scale in various industries, including agriculture, food processing, and shipping.

To achieve the aims of this project, the following objectives will be pursued:

- Conduct a comprehensive literature review of existing portable scales, image processing algorithms, and smartphone-based measurement tools.
- Develop an image processing algorithm that can accurately measure the mass of objects using a smartphone camera.
- Design and develop a prototype of the portable scale that incorporates the image processing algorithm.
- Test the accuracy and precision of the portable scale by comparing it to traditional weighing scales using a range of objects and masses.
- Write a report summarizing the findings of the project and making recommendations for future development and implementation of the portable scale.

2 Literature Review

2.1 Introduction

This literature review focuses on a project that aims to create a low-cost portable scale using a smartphone and image processing technology. The primary objective of the review is to provide a comprehensive overview of the existing knowledge, techniques, and technologies relevant to the proposed project. It will explore a range of topics, including smartphone-based measurement tools, the use of image processing techniques, current calibration and validation methods, and related works in the field, to demonstrate the feasibility of the proposed project and provide a solid foundation for its development.

2.2 Background

The importance of accurate and convenient weight measurement systems cannot be understated, as they play a critical role in various industries. Traditional weight measurements devices, such as mechanical scales, electronic balances, and load cells, are widely used but often come with limitations in terms of cost, portability, and ease of use. With the rapid advancement of technology, there is a growing interest in developing alternative, low-cost, and portable solutions that leverage the power of smartphones and image-processing technology. Despite these technological advancements, there are still challenges and limitations to overcome in developing an accurate and reliable low-cost portable scale based on smartphones and image processing technology. This literature review aims to provide a comprehensive understanding of the current state of the field and the relevant technologies, such as portable scales, image processing techniques, smartphone technology and sensors, and calibration methods. By identifying the gaps and limitations in existing approaches, this review will lay the foundation for the development of a low-cost portable scale using a smartphone and image processing technology, with the potential to revolutionize weight measurement systems.

2.3 Smartphone-based Measurement Systems

Over the past few years, smartphones have evolved into highly advanced, multifunctional devices equipped with a plethora of sensors and processing capabilities. This rapid development has allowed researchers and engineers to leverage smartphones for various measurement systems, utilizing their in-built sensors, computing power, and portability. In this section, we will discuss the current state of smartphone-based measurement systems, highlighting their applications, advantages, and limitations.

2.3.1 Applications of Smartphone-based Measurement Systems

Smartphone-based measurement systems have found applications across diverse fields such as healthcare, transportation, environmental monitoring, and industrial automation. Some notable examples include:

Health monitoring: Smartphones have been used to monitor heart rate, blood pressure, and physical activity levels using in-built or external sensors. Mobile applications have also been developed for diagnosing and managing chronic conditions such as diabetes or sleep disorders. For instance, Cardiio is a mobile app that uses a smartphone's camera to measure an individual's heart rate through non-contact photoplethysmography. [1] [2]

Transportation and navigation: Smartphones' integration of GPS, accelerometers, and gyroscopes has facilitated precise location tracking and navigation capabilities, enabling better transportation management and route optimization. Google Maps is a prominent example of smartphones being used for this purpose. [3]

Environmental monitoring: Smartphone sensors such as microphones and cameras have been employed to assess noise pollution, air quality, and other environmental factors in real time. For example, the AirVisual app provides real-time air quality data, forecasts, and historical trends by aggregating data from various sources. [4]

Industrial automation: Smartphones have been used as data acquisition and control devices in industrial processes, enabling remote monitoring, maintenance, and efficient resource management. Mobile apps for Programmable Logic Controllers (PLCs) are an example of smartphones being used in industrial automation. These apps communicate with the PLCs through wireless networks, allowing users to access the PLC from anywhere with an internet connection. [5]

2.3.2 Advantages of Smartphone-based Measurement Systems

The increasing popularity of smartphone-based measurement systems can be attributed to several advantages they offer:

Cost-effectiveness: As smartphones are widely available and include multiple sensors, their utilization in measurement systems can reduce the need for dedicated, costly hardware.

Portability: The compact and lightweight nature of smartphones enables users to carry and deploy measurement systems effortlessly, facilitating measurements in various locations and scenarios.

Accessibility: Smartphone-based measurement systems can reach a broader audience, given the widespread use of smartphones worldwide. This accessibility can potentially enhance data collection, knowledge sharing, and problem-solving across different domains.

Versatility: The combination of diverse sensors and powerful processing capabilities in smartphones allows for versatile measurement systems, capable of addressing a wide range of applications.

2.3.3 Limitations of Smartphone-based Measurement Systems

Despite the numerous advantages, there are certain limitations to consider when using smartphones for measurement systems:

Sensor accuracy and variability: The accuracy of sensors embedded in smartphones can vary between different devices and models, potentially affecting the reliability of the measurement system.

Power consumption: Continuous use of sensors and processing capabilities can drain the smartphone's battery, limiting the measurement system's operational time.

Data privacy and security: The use of smartphones for data collection and transmission may raise concerns about data privacy and security, necessitating robust data protection mechanisms.

In conclusion, smartphone-based measurement systems offer a cost-effective, portable, and accessible alternative to traditional measurement tools. By understanding and mitigating their limitations, these systems can significantly impact various industries, enhancing efficiency and decision-making processes. The low-cost portable scale developed in this project is one such example of an innovative smartphone-based measurement system, showcasing the potential of image processing technology in estimating object weight.

2.4 Image Processing for Weight Estimation

Image processing has become an essential tool in various fields due to advancements in computer vision and machine learning techniques. The capability of extracting meaningful information from images has led researchers to explore the potential of using image processing for weight estimation and other physical property measurements. In this section, we will discuss the different approaches and methodologies adopted in the literature for weight estimation using image processing techniques.

2.4.1 Approaches for Weight Estimation

Several approaches have been proposed to estimate an object's weight based on its appearance in images. Some of the most common methods include Shape and size analysis: By analysing the object's shape and size in images, researchers can develop models to estimate the object's weight. For instance, the size of fruits or fish has been correlated with their weight, allowing for weight estimation based on their dimensions in images. [6] [7]

Volume estimation: In some cases, the weight of an object can be estimated by first calculating its volume from images. Techniques such as stereo vision or depth sensors can be employed to obtain 3D information and subsequently calculate the volume of the object. This approach has been used for estimating the weight of irregularly shaped objects, such as logs or rocks. [8] [9]

Deformation analysis: Another approach for weight estimation is based on observing the deformation of an object or a supporting structure caused by the object's weight. In the context of this project, image processing is used to track the displacement of markers on a platform due to an object's weight. The displacement data can then be used to infer the object's mass. [10]

Machine learning and deep learning: Advanced machine learning and deep learning techniques, such as Convolutional Neural Networks (CNNs) and Support Vector Machines (SVMs), have been used for weight estimation tasks. These algorithms can learn complex patterns and relationships between image features and object weight through training on large datasets. [11]

2.4.2 Challenges and Considerations

While image processing techniques have shown promise for weight estimation tasks, there are several challenges and considerations to take into account:

Calibration and accuracy: Ensuring accurate weight estimation through image processing requires proper calibration and validation using ground truth data. This can be achieved by using known masses during the development and testing phases of the system.

Image quality and lighting conditions: The accuracy of weight estimation can be affected by variations in image quality and lighting conditions. It is crucial to consider these factors while designing the measurement setup and developing the image processing algorithms.

In summary, image processing techniques offer a promising alternative for weight estimation tasks. By understanding and addressing the challenges and considerations discussed in this section, accurate and reliable weight estimation can be achieved using image-based methodologies. The project presented in this dissertation is a testament to the potential of image processing technology in determining the mass of an object through marker displacement analysis.

2.5 MATLAB Image Processing Toolbox

The Image Processing Toolbox is a comprehensive suite of tools and functions available in MATLAB for processing, analysing, and visualizing images. The toolbox offers a wide range of algorithms for various image-processing tasks, such as image enhancement, segmentation, transformation, and feature extraction. In this section, we will discuss the key features and capabilities of the MATLAB Image Processing Toolbox and its relevance to the low-cost portable scale project using a smartphone.

2.5.1 Key Features and Capabilities

The MATLAB Image Processing Toolbox provides several features and capabilities that facilitate image processing and analysis, including:

Image enhancement: The toolbox offers a variety of algorithms for enhancing image quality, such as noise reduction, contrast adjustment, and filtering techniques. These functions help improve the image's visual appearance, making it easier to analyse and extract relevant information. [12]

Image segmentation: Segmentation is the process of dividing an image into meaningful regions or objects. The Image Processing Toolbox provides various segmentation algorithms, such as thresholding, region growing, and edge detection, to separate and identify objects within an image. [13]

Spatial transformations: The toolbox includes functions for performing spatial transformations on images, such as resizing, rotating, and warping. These functions are useful for image registration, alignment, and geometric correction. [14]

Feature extraction: The Image Processing Toolbox allows for the extraction of features from images, such as corners, edges, and blobs. These features can be used to analyse the properties of objects in images or as input for machine learning algorithms. [15]

Colour space conversion: The toolbox supports the conversion of images between various colour spaces, such as RGB, HSV, and YCbCr. This functionality is useful for colour-based image processing tasks, such as object recognition and tracking. [16]

2.5.2 Relevance to the Portable Scale Project

In the context of the low-cost portable scale project using a smartphone, the MATLAB Image Processing Toolbox is employed for processing the images captured by the smartphone camera and estimating the mass of objects based on marker size and displacement. The toolbox's capabilities are particularly relevant in the following aspects:

Image pre-processing: Enhancing the image quality by reducing noise, adjusting contrast, and correcting lighting conditions, which is essential for accurate marker detection and tracking.

Marker detection and tracking: The toolbox's segmentation, feature extraction, and morphological operations can be used to identify and track the position of the four white markers on the black surface.

Geometric transformations and analysis: The toolbox provides functions for calculating the size of each marker, the distance between markers, and the displacement caused by the mass placed on the platform. These measurements can be used to estimate the object's mass.

In summary, the MATLAB Image Processing Toolbox offers a comprehensive set of tools and functions for processing and analysing images, making it an essential component of the low-cost portable scale project using a smartphone. By leveraging the toolbox's capabilities, the project demonstrates the potential of image processing technology as an effective tool for estimating the mass of objects based on marker displacement analysis.

2.6 Previous Studies

Looking at previous studies, current methods using image processing tools to weigh objects tend to focus on systems designed to weigh specific objects, rather than a range of objects like traditional weighing scales. There is also currently no small weighing scale that uses image processing.

An example of a study that used image processing study was carried out by Duangkamol Dangphonthong and Wasan Pinate which uses the following method to analyse the image and estimate the weight of an egg:

First, a colour image of the egg is captured using a digital camera, resulting in an RGB image with a resolution of 3,000 x 4,000 pixels. The egg is placed in various positions to test the accuracy of weight estimation.

Second, image sharpening is performed to adjust the contrast of the image. The contrast is adjusted by determining the position of intensity changes, enabling the clear identification of the object's edges.

Third, image representation is used to separate the relevant parts of the image, with region representation used in this research. The egg's area is represented by the number 1, while other areas are represented by the number 0.

Fourth, regional descriptors are used to determine the basic features of the object, such as width, length, height, shape, and surface. In this research, the width and length of the egg are calculated using the distance formula.

Fifth, egg weight and volume are computed using various equations proposed by different researchers. This study uses the fourth equation to estimate egg volume, and the extrapolation method is used to estimate egg weight based on the relationship between weight and volume.

Finally, recognition involves sorting egg size by weight and comparing the analysed egg weight with the agricultural commodity and food standard. This helps in classifying the eggs according to their sizes. [17]

Another example of a study that used image processing was carried out by Sharma, R., Kumar, M. & Alam, M.S. which uses the following method to categorize wheat samples into sound, damaged, shrivelled, and broken grains:

First, the acquired colour images in BGR format were converted into three 8-bit grayscale images, representing the blue, green, and red bands. This simplifies the analysis by reducing the amount of data to be processed and focusing on intensity values.

Next, a low-pass Gaussian filter with a 5x5 kernel size was applied to the grayscale images to remove small discrepancies or noise, ensuring smoothness and preserving the important details in the images. After that, the combined thresholding algorithm of binary and Otsu operator was applied for background segmentation using the OpenCV threshold function. This technique helps in separating the desired object, such as wheat grain, from the background. Binary thresholding was used for other refractions, like damaged, shrivelled, and broken grains.

A mask was created based on the threshold values, and bitwise operations were performed to keep only the pixels in the desired range, thus segmenting the grains effectively. Following this, OpenCV's CHAIN_APPROX_NONE function was used to detect the contours of each binary image of grain. This step involves finding the boundaries of the grains in the images, which are then used for extracting size, shape, colour, and texture features.

RGB images were converted to HSV (Hue, Saturation, Value) colour space using OpenCV's BGR2HSV function. The HSV model is closer to human colour perception, making it more suitable for colour feature extraction.

Finally, a range of features was extracted using OpenCV library functions, including area, perimeter, solidity, minimum bounding rectangle (MBR), major and minor diameter, equivalent diameter, and more. Additionally, colour and texture feature like grey-level co-occurrence matrix (GLCM) were extracted using the skimage library.

These image processing techniques allowed for the systematic extraction of size, shape, colour, and texture features of the wheat kernels, which are essential for various analysis and classification tasks in agriculture. [18]

3 Methodology

3.1 Introduction

The methodology section of this project provides a detailed and systematic description of the steps and processes followed to develop a low-cost portable scale using a smartphone's rear camera and a folding/unfolding mechanism. This section aims to ensure that the project's approach is transparent and reproducible, allowing others to understand, evaluate, and potentially build upon the work. In this section, we will outline the methods used for selecting the appropriate CAD software and programming language, designing and refining the portable scale and folding mechanism, implementing the computer vision application and graphical user interface (GUI), and calibrating and validating the system's performance.

3.2 Selection of CAD Software and Programming Language

To select the most suitable CAD software and programming language for this project, a set of criteria was established to evaluate and compare the available options. These criteria included ease of use, availability of tutorials and resources, compatibility with computer vision libraries and integration capabilities.

3.2.1 Selection of CAD Software

After considering various CAD software packages, including CREO, Fusion 360, Onshape, Solidworks, and Ansys, Fusion 360 was chosen for the following reasons:

Fusion 360 is a CAD software that offers several benefits to its users. One of its advantages is its user-friendly interface, which makes it easier for new users to learn and become proficient in designing. Additionally, Fusion 360's cloud-based functionality enables seamless collaboration and remote access to project files, making it convenient for teams working on the same project. The software also offers comprehensive features that include parametric design, direct modelling, assembly, and FEA capabilities, which help streamline the design process. Moreover, Fusion 360 has a strong community support system, which includes an active user community and a wealth of online resources such as tutorials and forums that provide assistance in the learning process and troubleshooting support.

3.2.2 Selection of Programming Language

When evaluating programming languages, options like Python, C++, C#, and MATLAB were considered. MATLAB was chosen due to the following factors:

MATLAB is a programming language that offers several advantages for image processing and computer vision tasks. One of its strengths is its extensive library support, which includes built-in functions and toolboxes such as the Image Processing Toolbox and Computer Vision Toolbox, that are well-suited for these tasks. Additionally, MATLAB's syntax is straightforward and easy to understand, promoting the development of complex algorithms and reducing the likelihood of coding errors. The software also provides comprehensive documentation and has an active user community, which makes it easier to find solutions and guidance for implementing specific functions and algorithms. Overall, MATLAB is a powerful tool for image processing and computer vision tasks that offers simplicity, readability, and strong community support.

In conclusion, Fusion 360 and MATLAB were selected for this project based on their user-friendly interfaces, compatibility with each other, comprehensive features and strong community support. These tools provide an ideal foundation for the development of the low-cost portable scale system using a smartphone's rear camera and a folding/unfolding mechanism.

3.3 Conceptual design and design refinement

The key concept from the beginning was that there will be a camera looking up at a surface which has four different spherical markers. When a mass is placed on the main body, the legs of the mechanism will deform, causing the size of the markers to increase. Based on the sizes of the markers the weight will be calculated. Later in the project, to improve the accuracy of the scale, the distance of these four markers from the centre point was also used. By calculating the X and Y distance of each marker, the calibration matrix goes from 3x4 to 3x12.

The first mechanism that needed to be designed was the folding and unfolding mechanism. The initial inspiration for the final design is taken from folding picnic tables like the one seen below in Figure 1

Figure 1: Folding picnic table [19]

Next, a design for the leg had to be created. The leg design had to be created so that the mechanism can deform under loads of up to 500g and stay within the elastic region. To create different concepts for the leg Autodesk Fusion 360 was used. Below in Figure 2 you can see the leg designs that were considered to take into further testing using FEA:

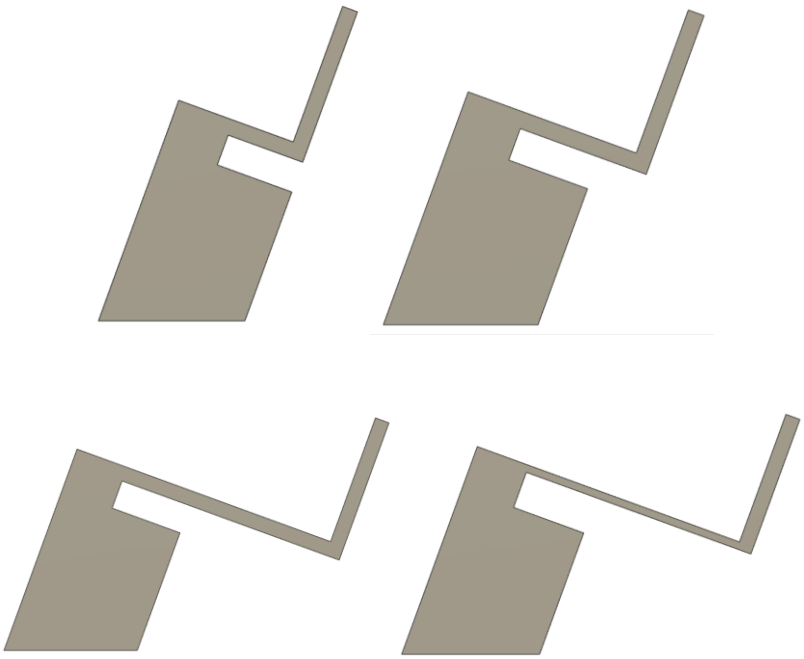

Figure 2: Concept leg designs

The inspiration for the leg designs was cantilever beams, this is because cantilever beams have many advantages, the key advantage in this application is that they offer large deflection. Greater deflection is beneficial because it means a greater change in pixel size and distance making the scale accurate for smaller masses. Another advantage of the cantilever beam is that it doesn't require support on the opposite side. The cantilever beam design also means the deformation can be controlled and predicted.

Later, due to the irregular shape of the legs rather than having the leg fold, it was chosen to have the supports of the base fold instead. The folding mechanism can be seen later in Figure 4. The legs are able to fold due to the hinge, as the hinge is very thin it is able to easily fold and unfold. If the product was to be mass-produced a metal hinge would likely be used to ensure the longevity of the product.

The main body for the scale was designed next, with the legs and base taken into consideration. The body is designed with 9 holes used to place a cylinder which will be used later for the calibration process. The main body is also designed with 4 holes on the sides seen later in Figure 5 to connect the legs. At the bottom of the main body, there are four white spherical markers which will be what the camera detects, the markers can be seen later in Figure 6.

Rather than using an actual smartphone, a webcam was used as it would be able to be mounted to the base and can be easily connected to a computer via USB. The webcam of choice was the Logitech C270 HD WEBCAM. This webcam was chosen because it doesn't have any auto-focus features. This is beneficial because it will give a consistent image which will improve repeatability. In order to mount the webcam PCB needed to be removed from its casing. To remove the PCB from the casing firstly, the top cover needs to be removed. Secondly, the front cover needs to be unscrewed and removed. Then, the PCB should be unscrewed from the casing. Finally, to remove the wire, a hot knife should be used to cut the casing. By following these steps, the device can be disassembled effectively and safely.

Looking at the PCB because of the connecting cable at the bottom of the PCB, seen in Figure 3 two raised holes were created in the base in order to screw into PCB onto the base, as seen later in Figure 6.

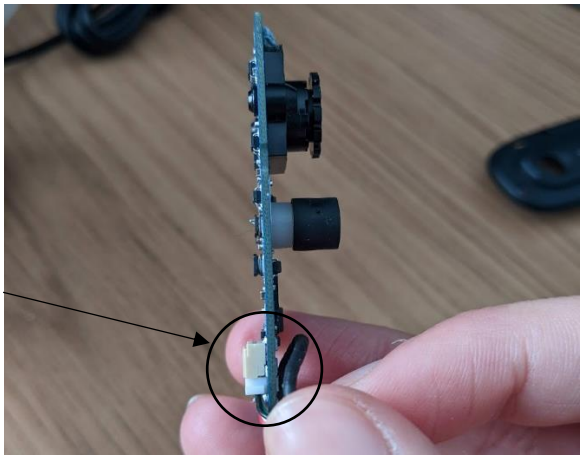

Figure 3: Webcam PCB

The model was planned to be 3D printed, and the material of choice was either PLA (Polylactic Acid) or ABS (Acrylonitrile Butadiene Styrene). ABS was chosen because generally, ABS has higher elasticity than PLA, meaning it will return to its original shape relatively quickly. Other advantages of ABS over PLA are; better impact resistance, higher temperature resistance and greater durability.

3.4 CAD Modelling

Following the concept design, the individual parts and the complete model were created in Fusion 360.

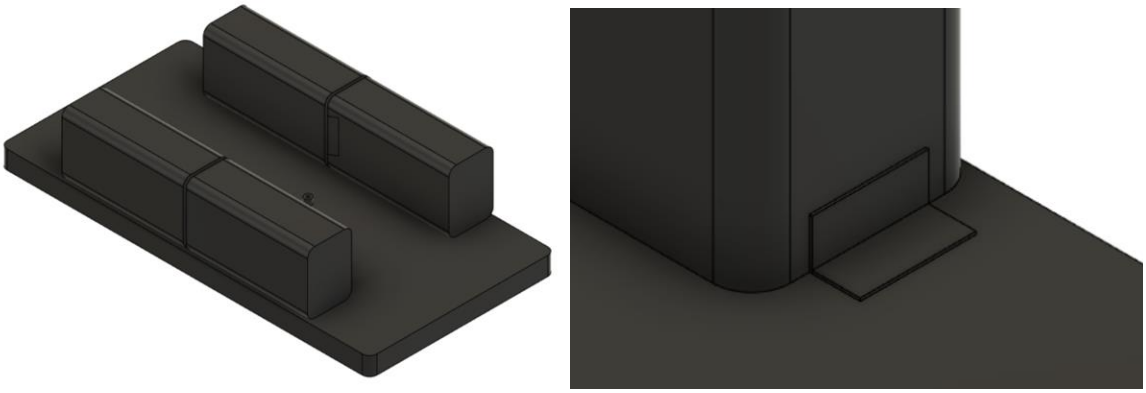

Figure 4: Folding Mechanism and Folding Hinge

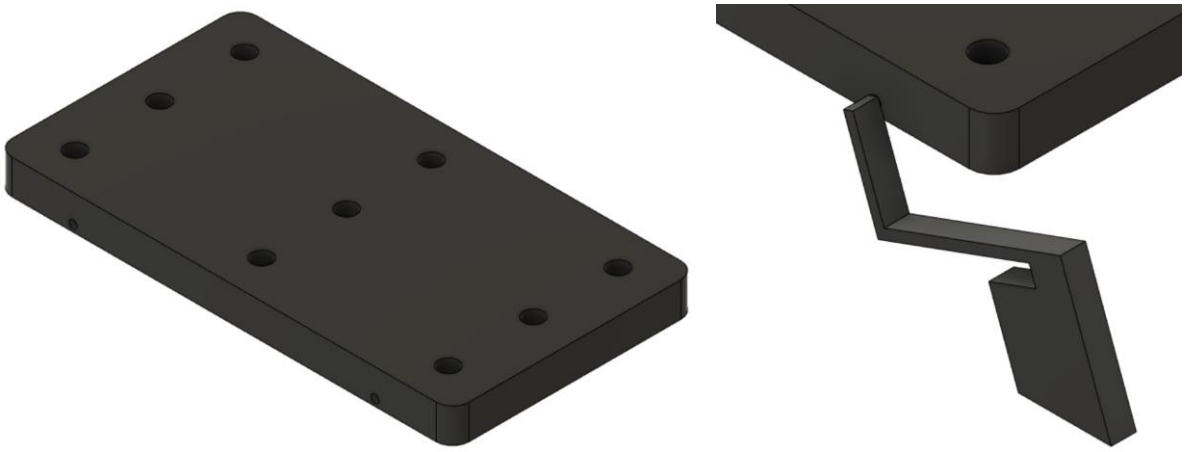

Figure 5: Main Body and Leg

Figure 6: Main Body with Markers and Base raised Holes

3.5 FEA

Below are the properties used for the ABS within Ansys Workbench:

- Density: 1.3 g/cm^3
- Elastic modulus: 2.5 GPa
- Poisson's ratio: 0.45
- Yield strength: 55 MPa
- Ultimate tensile strength: 65 MPa

Firstly, the four concept designs for the leg were put under loads of 5 N (500 g)

Below, in Figure 7 you can see how the force is applied and the fixed support.

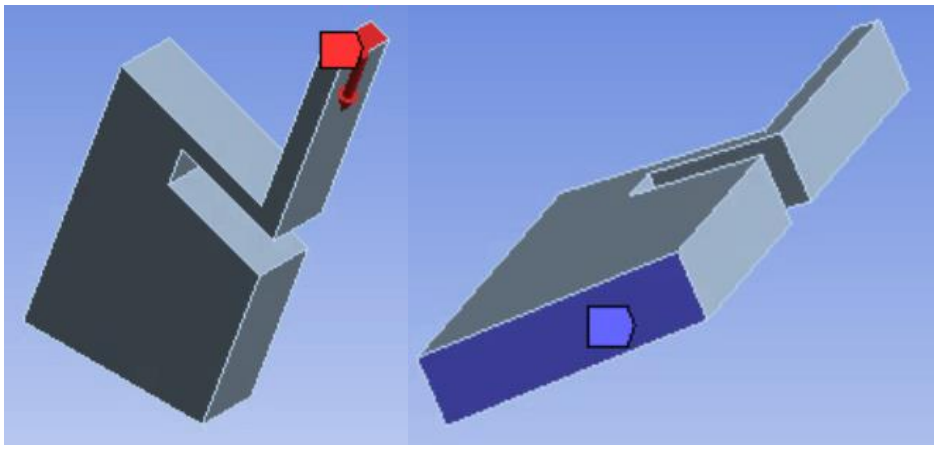

Figure 7: Force and Fixed Support in Ansys Mechanical

Below in Figures 6-11 are the total deformations for the four concept designs

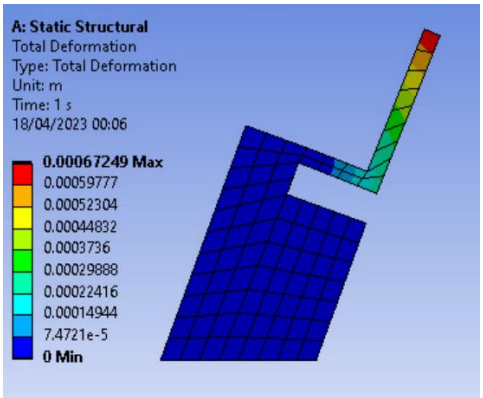

Figure 8: Total Deformation of Concept Leg 1

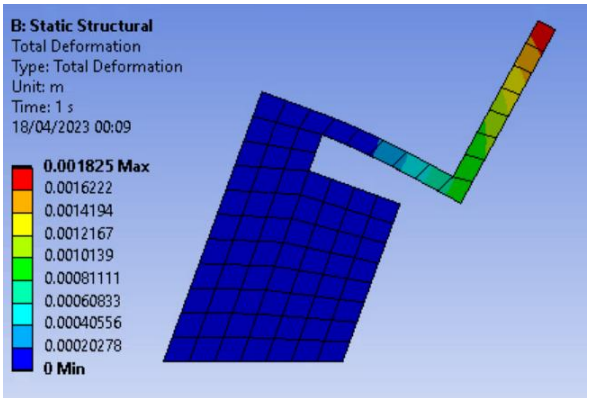

Figure 9: Total Deformation of Concept Leg 2

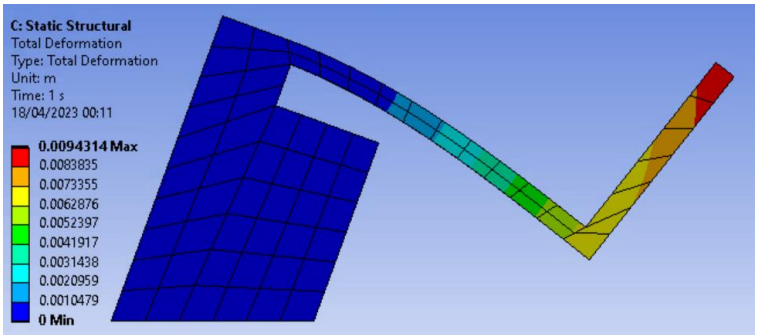

Figure 10: Total Deformation of Concept Leg 3

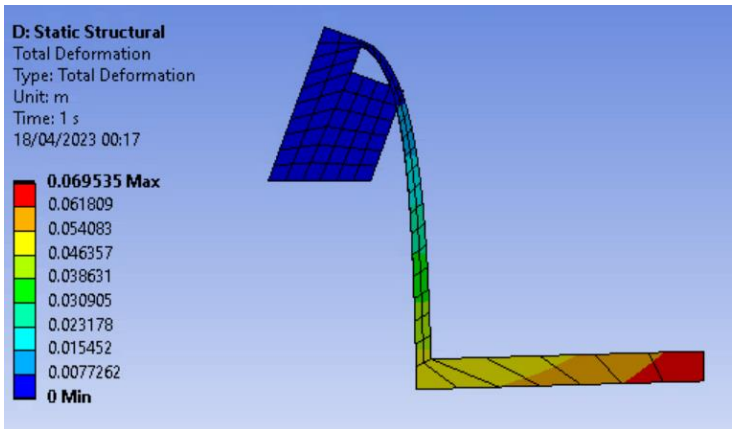

Figure 11: Total Deformation of Concept Leg 4

At this point, Concept Design 4 can be ruled out due to excessive deformation

Below in Figures 12-14 are the Equivalent Stresses for the remaining three concept designs

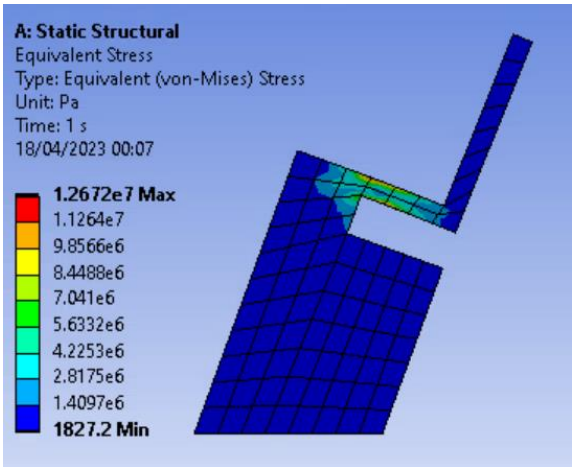

Figure 12: Equivalent Stress of Concept Leg 1

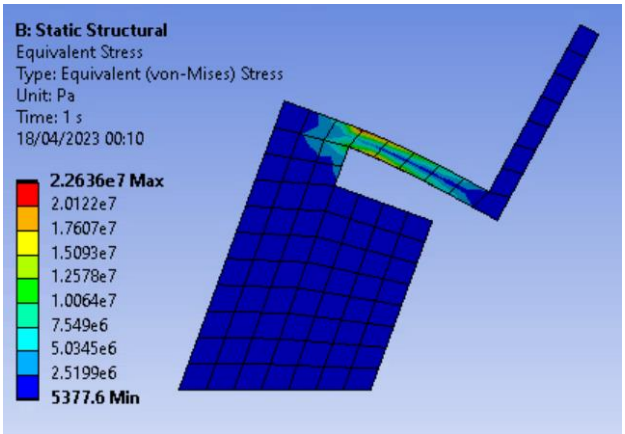

Figure 13: Equivalent Stress of Concept Leg 2

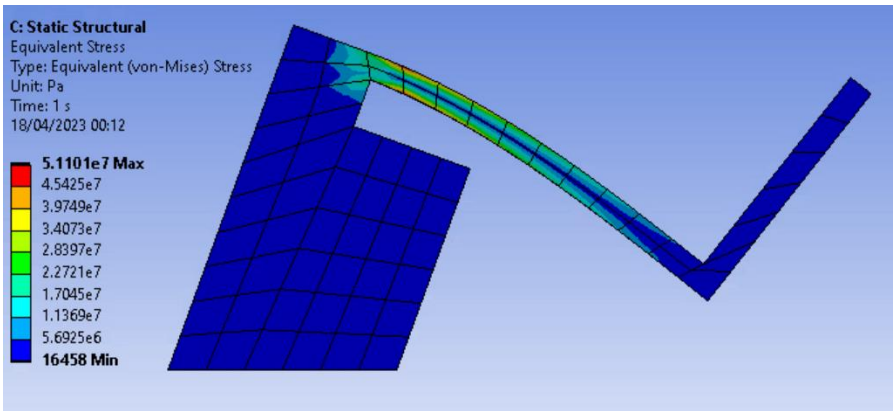

Figure 14: Equivalent Stress of Concept Leg 3

It can be seen that none of the equivalent stresses exceeds the yield stress of 55 MPa therefore all designs will stay within the elastic region and there will be no permanent deformation. Therefore, Concept Leg 3 was chosen due to having the largest amount of deformation without any points on the leg coming in contact with each other.

Using the results from the FEA, the design for the final model was finalised and created using CAD, as seen below in Figure 15

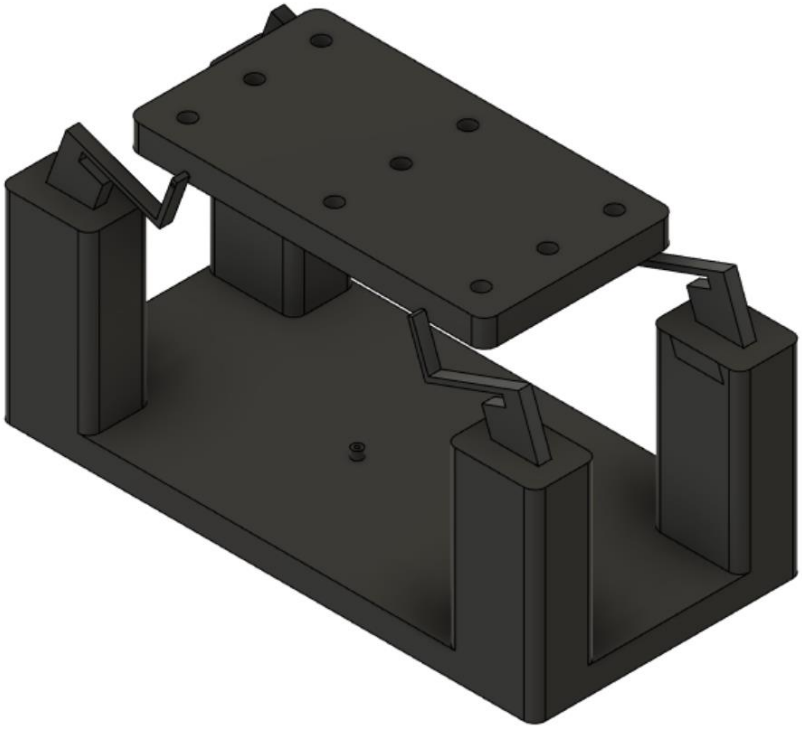

Figure 15: Complete CAD model

Next, the total deformation of the entire model was also predicted using FEA. Below in Figures 16-19 are the predicted deformations for the different positions:

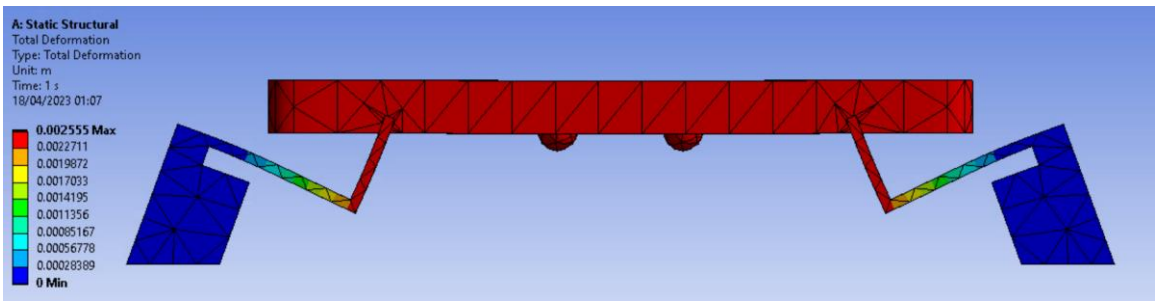

Figure 16: Predicted deformation when on Fz is applied

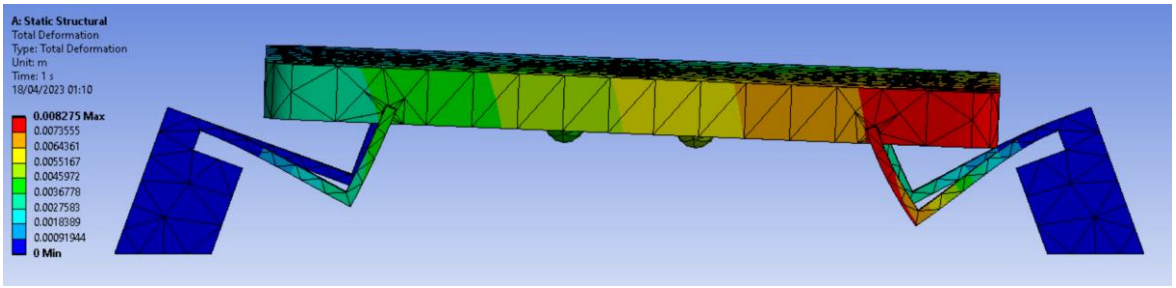

Figure 17: Predicted deformation when Fz, Mx and My are applied

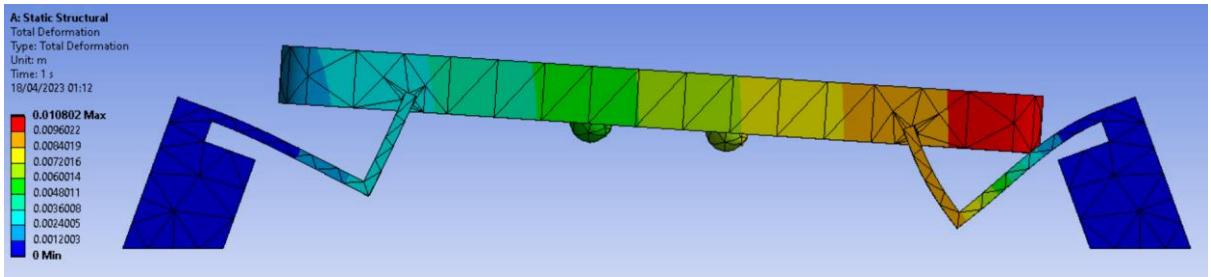

Figure 18: Predicted deformation when Fz and Mx are applied

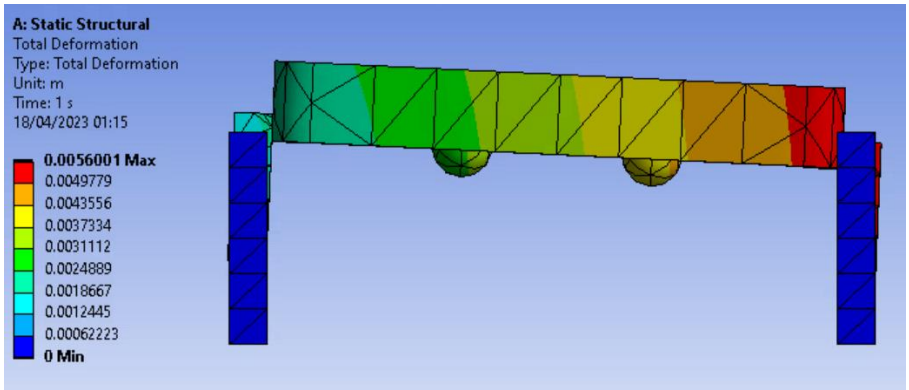

Figure 19: Predicted deformation when Fz and My are applied

3.6 Development of the MATLAB code

The code was then developed within MATLAB, during testing of the code rather than using a webcam image a .jpg image was used instead. Once the code was tested, the webcam was included.

Below is a detailed description of the steps within the code:

1. Initialize the camera by creating a webcam object named 'cam'.
2. Create the GUI window with specified dimensions and a title called 'Image Analysis'.
3. Define the image axes inside the GUI window to display the captured images.
4. Create labels in the GUI to display the number of white pixels, centroid positions of white pixels in four equal sections of the processed image and mass
5. Create a main loop that continues running as long as the GUI window is open:
    a. Capture an image from the camera.

b. Apply a Gaussian filter to the image to smooth it and reduce noise.
c. Convert the filtered image to a binary (black and white) image.
d. Divide the binary image into four equal sections.
e. Count the number of white pixels in each section.
f. Compute the centroid positions of the white pixels in each section.
g. Calculate the X and Y distances of each centroid from the centre of the whole image.
h. Calculate the mass using the centroid positions, X and Y distances and the calibration matrix
i. Display the binary image and the results (white pixel count, centroid positions and mass) in the GUI.

6. When the GUI window is closed, clean up by deleting the camera and GUI objects.

Below Figure 20 shows how the centroid positions are calculated:

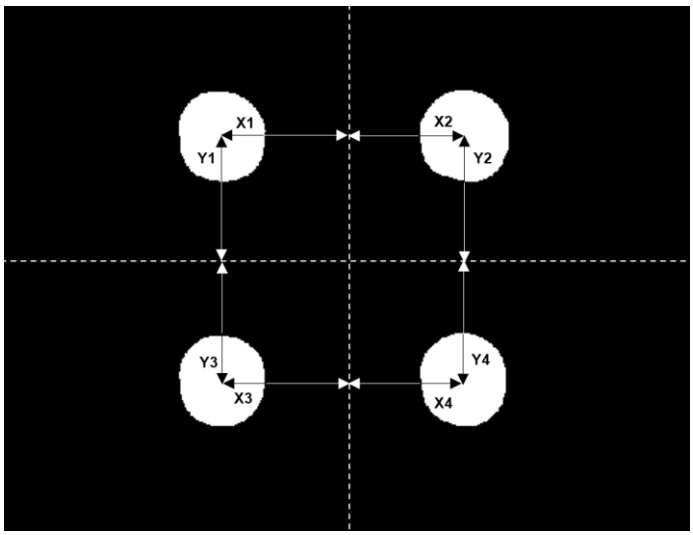

Figure 20: Graphic showing how the centroid positions are calculated

In summary, this code captures images from a webcam, processes the images by applying a Gaussian filter and converting them to binary, and then divides the images into four equal sections. It computes the number of white pixels and their centroid positions in each section and displays the results in a GUI window. The full code can be found in Appendix B.

3.7 Prototype fabrication and testing

The CAD models were then converted into STL (Standard Tessellation Language) files and placed onto the virtual print bed with supports on the software UltiMaker Cura 5.2.2. The pre-defined profile was used for the print settings. The model is then sliced and saved as a G-code. The G-code is then put onto a USB flash drive and loaded onto the printer. The print bed is levelled and the correct filament is added. From here the printing process can be started. Once the parts are printed, they are put into a chemical bath. This is to remove any soluble support material and remove any excess material that may have been left on the part after printing.

Once the parts were ready, the four markers on the main body needed to be painted white, this was done using white acrylic paint. Next, the webcam PCB was mounted onto the base and the legs were attached to the main body. Finally, the legs were then connected to the base to complete the model.

Following this, the model was tested by placing 500g of mass onto each of the 9 positions of the main body to see the levels of deformation. Figure 21 shows the Fz and Fz,Mx,My positions and Figure 22 shows the Fz,Mx and Fz,My positions

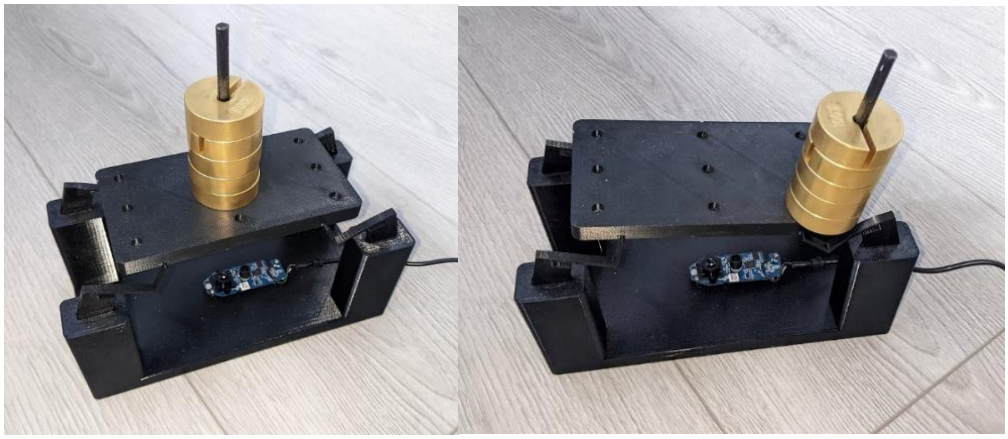

Figure 21: Testing of the deformation with Fz and Fz,Mx,My

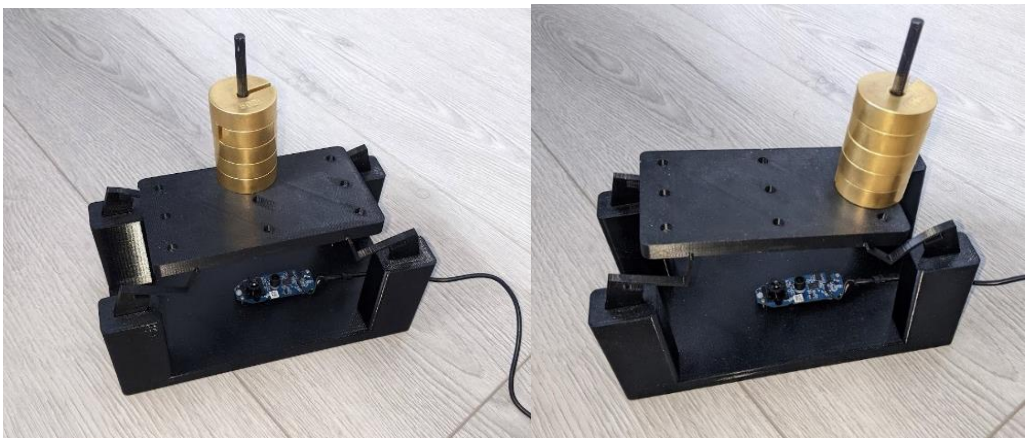

Figure 22: Testing of the deformation with Fz,Mx and Fz,My

The webcam image was also tested to see if the four white markers were clearly visible. The webcam image can be seen below in Figure 23.

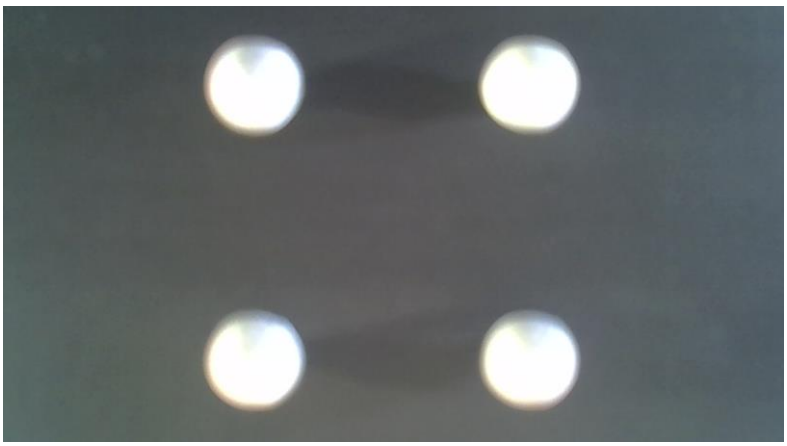

Figure 23: Webcam image showing the visibility of the four white markers

3.8 Calibration and validation

For the calibration process, first data was collected for each of the 9 positions on the main body. This was done by using a separate MATLAB code which creates two separate figures with a line plot, one for the white pixel counts and one for the X and Y distance of the centroids. The full code can be found in Appendix C Using this code, masses from 0g to 500g were placed in steps of 100g every 10 seconds. Then the masses were removed from 500g to 0g in steps of 100g every 10 seconds. This was repeated 3 times for all 9 positions.

By manually extracting the data from all of the graphs, the data is then put onto an Excel spreadsheet. The Fz, Mx and My for each of the 9 positions can be calculated using the X and Y distances of the positions from the centre point. This calibration method is inspired by the research carried out in " Three-Axis Fiber-Optic Body Force Sensor for Flexible Manipulators" [20]

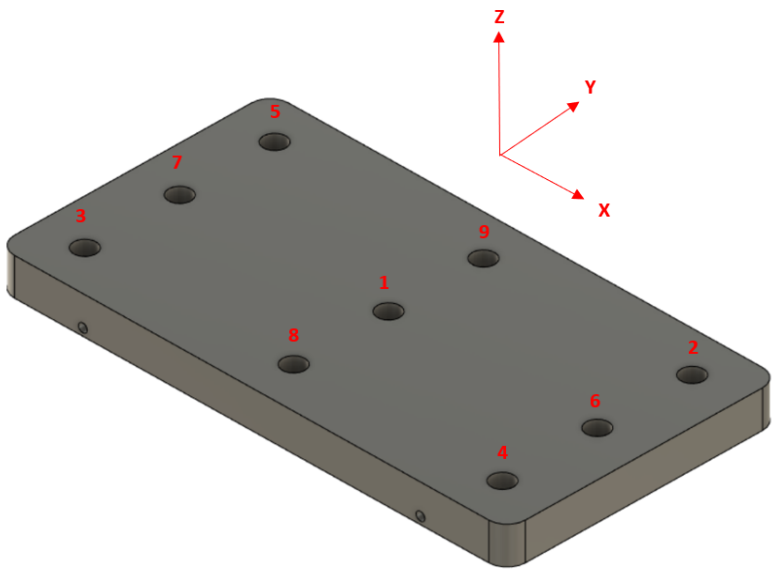

Figure 24: Main body with labels of the nine positions

Using the data from positions 1-5 in Figure 24 another MATLAB code is used to find the calibration matrix. The calibration matrix is found by performing linear regression. The full code can be found in Appendix D. Once the calibration matrix is found it can be used to predict the Fz, Mx and My using the formula below:

$$\begin{bmatrix} Calibration \\ Matrix \end{bmatrix} \times \begin{bmatrix} Count\ 1 \\ Count\ 2 \\ Count\ 3 \\ Count\ 4 \\ X1\ Distance \\ Y1\ Distance \\ X2\ Distance \\ Y2\ Distance \\ X3\ Distance \\ Y3\ Distance \\ X4\ Distance \\ Y4\ Distance \end{bmatrix} = \begin{bmatrix} Fz \\ Mx \\ My \end{bmatrix}$$

$$\begin{bmatrix} C_{1,1} & C_{1,2} & C_{1,3} & C_{1,4} & C_{1,5} & C_{1,6} & C_{1,7} & C_{1,8} & C_{1,9} & C_{1,10} & C_{1,11} & C_{1,12} \\ C_{2,1} & C_{2,2} & C_{2,3} & C_{2,4} & C_{2,5} & C_{2,6} & C_{2,7} & C_{2,8} & C_{2,9} & C_{2,10} & C_{2,11} & C_{2,12} \\ C_{3,1} & C_{3,2} & C_{3,3} & C_{3,4} & C_{3,5} & C_{3,6} & C_{3,7} & C_{3,8} & C_{3,9} & C_{3,10} & C_{3,11} & C_{3,12} \end{bmatrix} \times \begin{bmatrix} Count\ 1 \\ Count\ 2 \\ Count\ 3 \\ Count\ 4 \\ X1\ Distance \\ Y1\ Distance \\ X2\ Distance \\ Y2\ Distance \\ X3\ Distance \\ Y3\ Distance \\ X4\ Distance \\ Y4\ Distance \end{bmatrix} = \begin{bmatrix} Fz \\ Mx \\ My \end{bmatrix}$$

$$[C] = \begin{bmatrix} 0.967 & -4.989 & -8.805 & 5.938 & 357.216 & -6.199 & 196.438 & -583.162 & 179.471 & -211.860 & 437.636 & -16.777 \\ 0.018 & -0.129 & 0.191 & -0.093 & -5.519 & -9.868 & -0.999 & -3.020 & 2.784 & 2.154 & 10.953 & 5.718 \\ 0.277 & 0.001 & -0.311 & 0.010 & 4.356 & 1.110 & 1.546 & -10.231 & -5.456 & 7.279 & -1.956 & 5.554 \end{bmatrix} \times 10^{-3}$$

Using the data from 1, 6, 7, 8 and 9 in Figure 24 the Fz, Mx and My is predicted to validate the accuracy and reliability of the scale by comparing the actual results to the predicted results. The nonlinearity, crosstalk, and hysteresis were also calculated.

Below are the equations used for calculating these terms:

$$Error(\%) = \frac{(Real\ Load - Measure\ Load)}{Full\ Load} \times 100$$

$$Nonlinearity(\%) = \frac{(Max.Deviation\ from\ regressed\ line)}{Full\ Load} \times 100$$

$$Crosstalk(\%) = C_0 = \frac{F_i}{F_j} \times 100 : ratio\ of\ i - Axis\ out\ \&\ j - Axis\ Out$$

$$Repeatability(\%) = \frac{Std.Deviation\ of\ repeated\ measure}{Full\ Load} \times 100$$

$$Hysteresis(\%) = \frac{Max.Difference\ of\ Output\ between\ loading\ \&\ unloading}{Full\ Load} \times 100$$

The risk assessment for the methodology can be found in Appendix E

4 Analysis and Results

Table 1:Experimental Configuration of the Applied Loads for Calibration

Positions on calibration base (see Fig. 23)	Force and Moment component	Force/Moment ranges
1	Fz	-4.90N to 0N
6	Fz Mx	-4.90N to 0N 0Ncm to 26.97Ncm
7	Fz Mx	-4.90N to 0N -26.97Ncm to 0Ncm
9	Fz My	-4.90N to 0N 0Ncm to 12.26Ncm
8	Fz My	-4.90N to 0N -12.26Ncm to 0Ncm

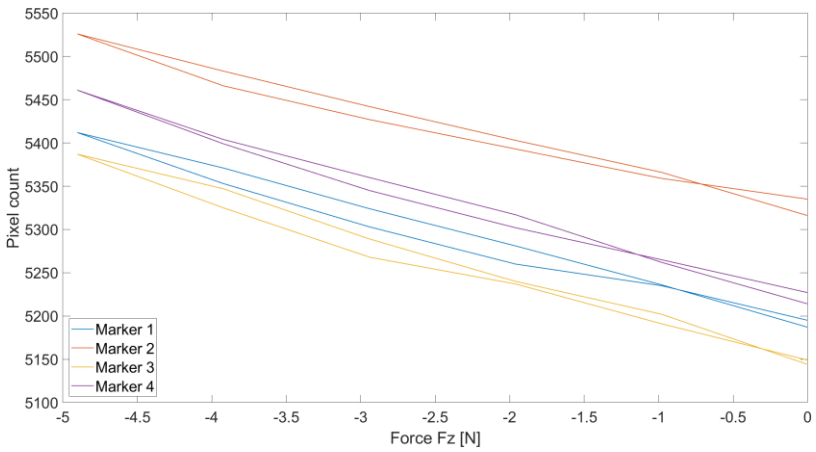

Figure 25: Characteristic Curve between the loads Fz, and the pixel count

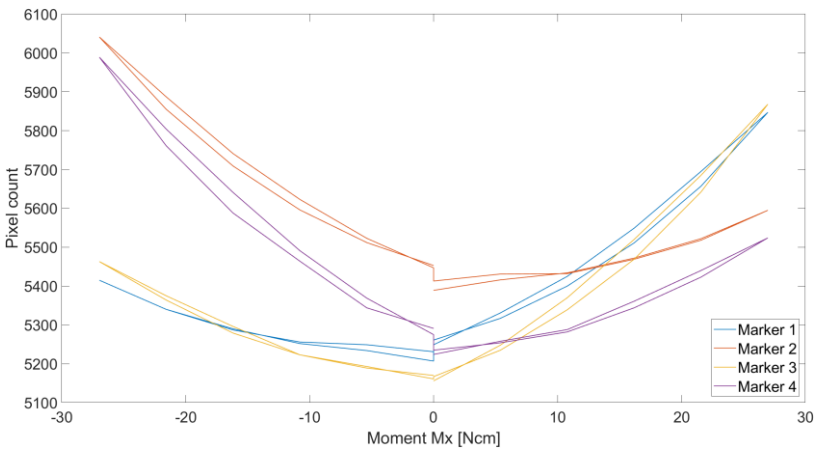

Figure 26: Characteristic curve between the loads Fz Mx, and the pixel count

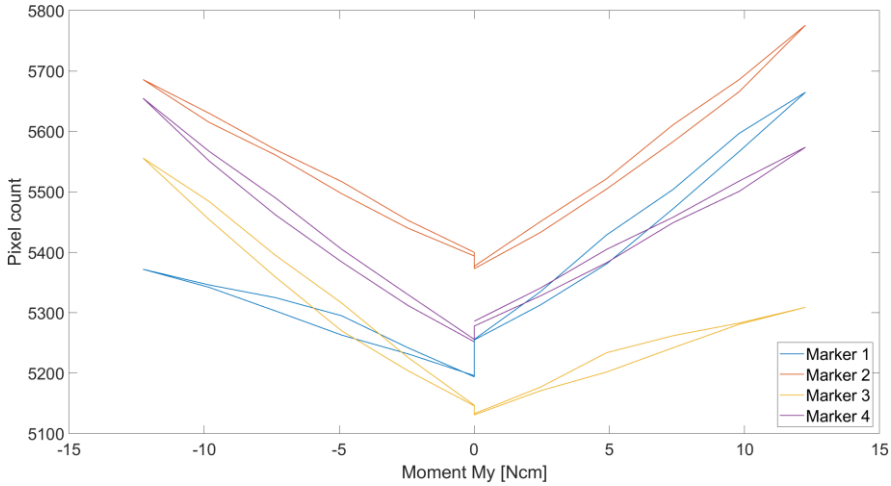

Figure 27. Characteristic curve between the loads Fz My and the pixel count

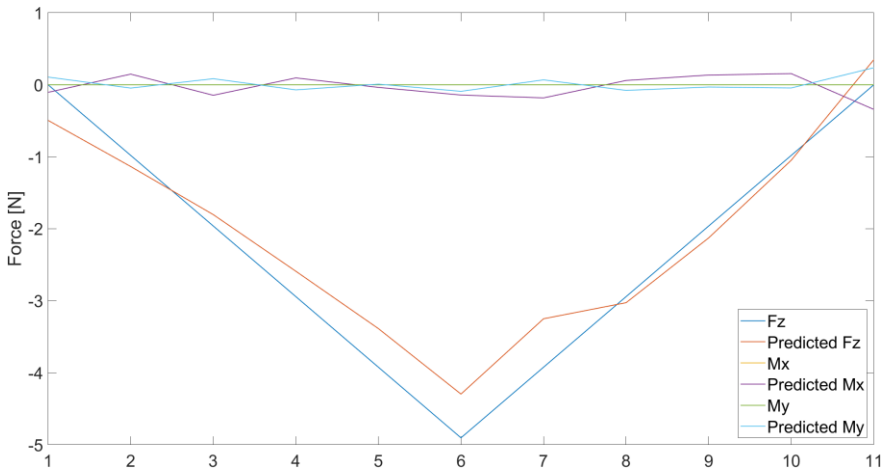

Figure 28. Comparison between real Fz values and estimated Fz.

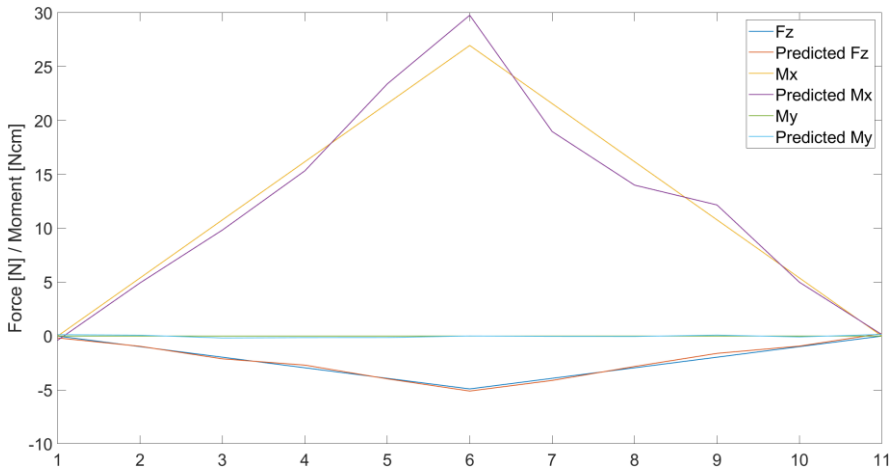

Figure 29. Comparison between real Fz Mx and estimated Fz Mx (Positive Mx)

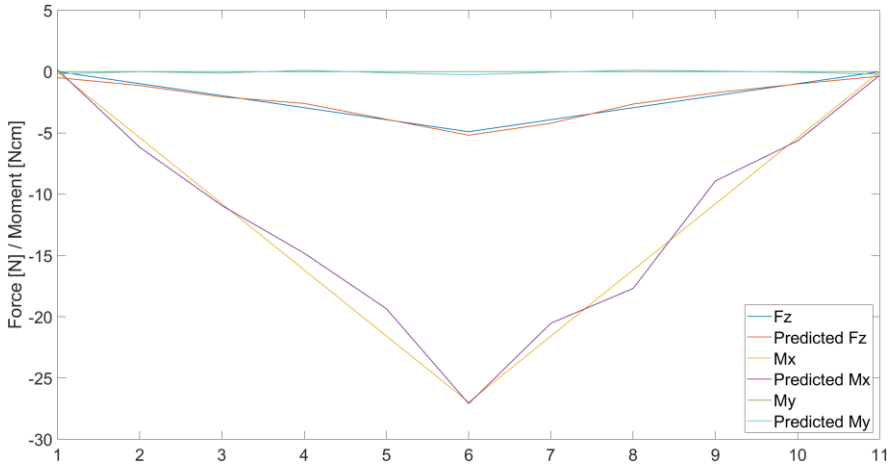

Figure 30. Comparison between real Fz Mx and estimated Fz Mx (Negative Mx)

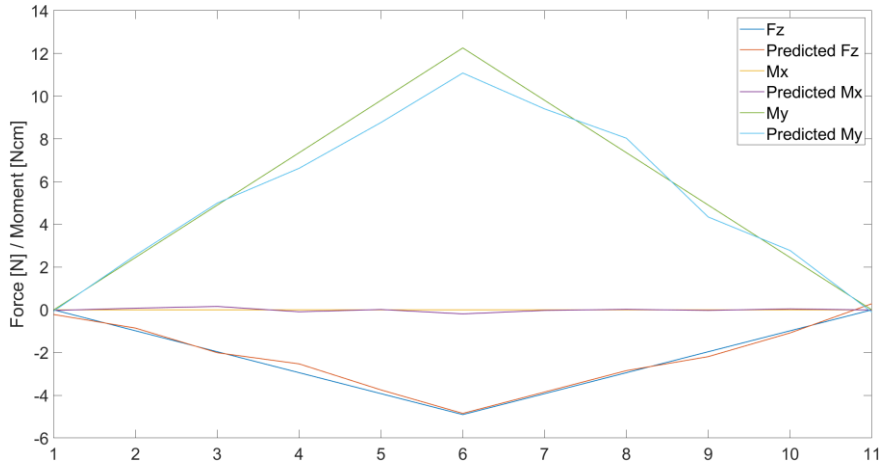

Figure 31. Comparison between real Fz My and estimated Fz My (Positive My)

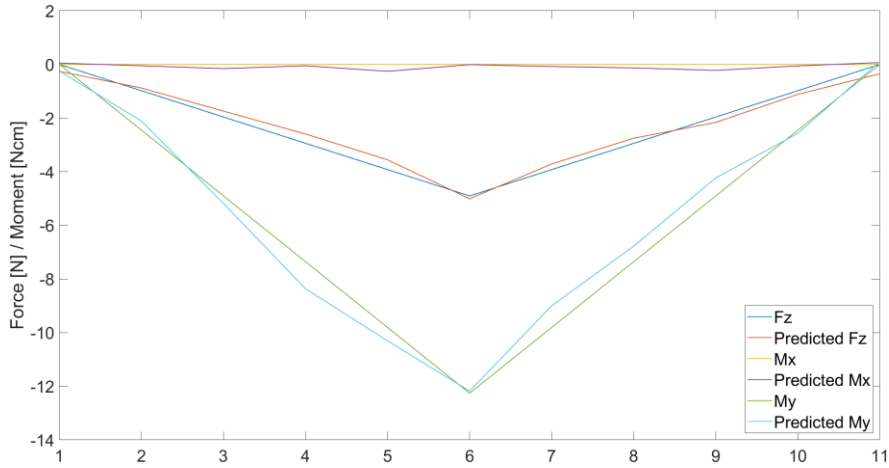

Figure 32:. Comparison between real Fz My and estimated Fz My (Negative My)

Table 2: Sensor Performance Property: Range, Error and Non-linearity

Force / Moment	Range	Maximum Error	Nonlinearity (%)
Fz	-4.90N to 0N	0.35 N (18.08%)	13.73
Mx	-26.97N to 26.97N	1.87 Ncm (17.29%)	9.62
My	-12.26N to 12.26N	0.34 Ncm (13.83%)	13.82

Table 3: Sensor Performance: Repeatability and Hysteresis

Force / Moment	Repeatability (%)	Hysteresis (%)
Fz	4.29	9.05
Mx	5.74	7.42
My	3.88	11.71

Table 4: Sensor Performance Property: Crosstalk

Force / Moment	Crosstalk (%)				
	Fz	Fz Mx		Fz My	
		+Mx	-Mx	+My	-My
Fz	Fz	Fz	Fz	Fz	Fz
Mx	15.80	Mx	Mx	11.48	8.10
My	4.50	8.98	5.91	My	My

The estimated Fz, Mx, and My are compared with the ground-truth values of the Fz, Mx and My, shown in Figure 28-32 and Table 2. It was observed that the maximum error for Fz is 0.35 N (18.08%) as depicted in Table 2. The maximum error for Mx is 1.87Ncm (17.89%) as depicted in Table 2. The maximum error for My is 0.34 Ncm (13.83%) as depicted in Table 2. Nevertheless, the calibration matrix can estimate the force and the moments within a sensor range of Fz (-4.9 N to +4.9 N), Mx (-26.97Ncm to +26.97Ncm) and My (-12.26 Ncm to +12.26 Ncm) with a maximum absolute and percentage error.

The nonlinearity of the Fz, Mx and My are shown in Figure 28-32 and Table 2. Looking at Figures 27-31 it can be seen that the Fz , Mx and My are fairly linear. The characteristic curves as seen in Figure 25-27 are not absolutely linear and show an exponential increase when a force is applied

The results of the repeatability test are presented in Table 3, showing the capability of the force sensor in reproducing the same condition of the force, and two moments. It can be seen that the maximum percentage repeatability for Fz, Mx and My is 4.29%, 5.74% and 3.88% respectively.

The results of the hysteresis tests are shown in Table 3; an external force is applied onto the main body from zero to the maximum value, and then released from the maximum to zero again. During one cycle, the characteristic curves exhibit a considerable hysteresis as shown in Figures 25-27. The maximum percentage of hysteresis for Fz, Mx and My is 9.05%, 7.42% and 11.71% respectively.

The crosstalk between force Fz and moments Mx and My is detailed in Table 4. Ideally, Mx and My should remain zero when Fz is applied, and similarly for other combinations. However, crosstalk experiments reveal influence on other readings, as shown in Figures 28-32. Crosstalk percentages are as follows: 15.80% and 4.50% for Mx and My when Fz is applied; 8.98% for My when Fz and positive Mx are applied; 5.91% for My when Fz and negative Mx are applied; 11.48% for Mx when Fz and positive My are applied; and 8.10% for Mx when Fz and negative My are applied (see respective Figures 28-32).

5 Discussion

5.1 Interpretation of Results

Looking at the results, the errors and crosstalk are associated with hysteresis, as shown in Figures 25-27. Due to the hysteresis, the calculated calibration matrix causes errors and crosstalk in values of the Fz, Mz, and My. It also negatively influences the repeatability of the sensor. As shown in Table 3 the repeatability errors of Fz, Mx and My are also relatively high. The hysteresis is likely caused because of the use of ABS due to its material formulation and processing history. The specific ratio of acrylonitrile, butadiene, and styrene in the ABS polymer, as well as any additives, can affect its mechanical properties, including hysteresis. The thermal and mechanical stresses experienced during processing during 3D printing can affect the microstructure and material properties of ABS, leading to variations in hysteresis.

5.2 Significance of the Project

The portable smartphone scale developed in this project presents an innovative approach to measuring the mass of objects using image processing technology. To better understand its strengths and weaknesses, it is essential to compare this method with existing weighing devices, such as spring scales, electronic scales, or hydraulic scales.

One of the main advantages of the portable smartphone scale is its cost-effectiveness. By leveraging widely available smartphones and using affordable materials such as a 3D-printed platform and a webcam, this method can be significantly cheaper than traditional weighing devices, making it more accessible to a broader audience.

The portable smartphone scale is also user-friendly and can be operated with minimal training. The process of weighing objects involves simply placing them on the platform and using a smartphone to capture images. This simplicity contrasts with some traditional weighing devices that may require specific knowledge or expertise to operate.

Additionally, the compact and lightweight nature of the smartphone scale makes it highly portable, allowing users to weigh objects virtually anywhere. In comparison, traditional weighing devices like electronic or hydraulic scales may be bulky or heavy, limiting their portability and usability in various settings.

However, while the smartphone scale has demonstrated its potential in measuring mass using image processing techniques, it might not yet achieve the same level of precision and accuracy as some traditional weighing devices, especially those designed for measuring very small or large masses. Factors such as lighting conditions and surface irregularities can also influence the accuracy of the image processing algorithm.

In terms of reliability, traditional weighing devices like electronic or hydraulic scales may have well-established track records, whereas the portable smartphone scale is a relatively new concept. Although this project has shown the feasibility of using image processing for mass measurement, further research and development are needed to ensure the system's long-term reliability.

Finally, the portable smartphone scale can be advantageous in situations where traditional weighing devices are impractical, such as field research or remote locations. However, its applicability in specific industries or applications might be limited compared to specialized weighing devices designed for precise purposes, like medical or scientific research.

In summary, the portable smartphone scale offers several advantages over traditional weighing devices, including cost, ease of use, and portability. While its accuracy and reliability might not yet surpass that of established weighing devices, the smartphone scale presents a promising alternative that can be further improved through ongoing research and development.

5.3 Limitations

During the course of this project, certain limitations and assumptions were encountered, which may have influenced the results and overall performance of the developed system.

One limitation is the accuracy of the 3D-printed platform. The precision of the 3D-printed platform might not be perfect, potentially introducing errors in the measurements. Slight deviations in the geometry or material properties of the platform could impact the system's ability to accurately measure mass.

Another limitation is the resolution of the webcam used in the project, which can affect the accuracy of the image processing algorithm. Lower resolution images may not provide sufficient detail to accurately detect the markers, leading to measurement errors.

Additionally, the calibration using fixed masses might not represent the full range of weights the system is expected to measure. This limitation could result in inaccuracies when weighing objects that fall outside of the calibration range.

Moreover, the performance of the image processing algorithm can be influenced by the lighting conditions under which the experiments are conducted. Shadows, reflections, or glare may interfere with the detection of markers and impact the accuracy of the system.

Finally, the system assumes that the object being weighed is placed evenly on the platform. Any uneven distribution of weight or misalignment could introduce inaccuracies in the mass measurement.

By acknowledging these limitations and assumptions, we can better understand the potential sources of error in the project and identify areas for future improvement. Addressing these concerns in subsequent iterations can enhance the overall performance and accuracy of the system.

6 Conclusions

6.1 Conclusions from the Investigation

This project has successfully demonstrated the feasibility of developing a low-cost, portable scale using a smartphone and image processing technology. By utilizing a 3D-printed platform, a webcam, and image processing algorithms in MATLAB, the system offers an innovative approach to mass measurement that is accessible, user-friendly, and portable.

While the portable smartphone scale may not yet achieve the same level of accuracy and reliability as some traditional weighing devices, the project has shown its potential in various applications, including everyday use, field research, and education. The technology offers a promising alternative to conventional weighing methods, and with further research and development, its performance and versatility can continue to improve.

Comparisons with existing methods have highlighted the strengths of the portable smartphone scale, such as cost-effectiveness, ease of use, and portability. However, these comparisons have also revealed areas where the system could be improved, including accuracy, reliability, and applicability in specialized industries or applications.

In conclusion, the portable smartphone scale represents a significant advancement in mechanical engineering and related disciplines, showcasing the potential of image processing technology and smartphone integration in creating accessible and affordable weighing solutions. This project serves as an inspiring example of innovation, collaboration, and progress in the field of engineering.

6.2 Suggestions for Further Work

Several areas can be explored to improve the performance, accuracy, and versatility of the portable smartphone scale, making it even more useful and relevant across various sectors.

One area is the enhancement of the image processing algorithm. Developing and implementing a more sophisticated algorithm can improve marker detection and measurement accuracy. Machine learning and advanced computer vision algorithms

can be employed to increase the system's robustness against various lighting conditions and surface irregularities.

Another improvement can be achieved by utilizing higher-resolution cameras, possibly built into smartphones. This would result in more detailed images, which can improve the detection and measurement of markers, leading to increased accuracy and consistency in mass measurements.

Incorporating other types of sensors, such as accelerometers or pressure sensors, can also enhance the system's ability to account for irregularities in object placement or surface conditions. These sensors can provide supplementary data to improve measurement accuracy and compensate for potential sources of error.

Developing a more comprehensive calibration method that considers a wider range of masses or dynamically adjusts to the specific weighing conditions can lead to increased accuracy across different mass ranges and environmental factors. Furthermore, optimizing the 3D-printed platform design by experimenting with different materials, geometries, and fabrication techniques can improve its precision and stability, contributing to a more consistent and accurate measurement system.

Finally, expanding the range of applications by investigating the system's applicability to various industries and specific use cases can widen its utility. For example, exploring its potential in areas like medical and pharmaceutical applications, precision agriculture, or geological sampling can lead to new opportunities for the portable smartphone scale.

By focusing on these future work and improvements, the portable smartphone scale can continue to evolve, providing more accurate, reliable, and versatile mass measurement solutions for users in different fields. The pursuit of these enhancements will further contribute to the ongoing growth and innovation within mechanical engineering and related disciplines.

7 References

[1] - Coppetti, T., Brauchlin, A., Müggler, S., Attinger-Toller, A., Templin, C., Schönrath, F., Hellermann, J., Lüscher, T.F., Biaggi, P. and Wyss, C.A., 2017. Accuracy of smartphone apps for heart rate measurement. *European journal of preventive cardiology*, *24*(12), pp.1287-1293.

[2] - Demırezen, H. and Erdem, Ç.E., 2017, May. An overview of non-contact photoplethysmography. In *2017 25th Signal Processing and Communications Applications Conference (SIU)* (pp. 1-4). IEEE.

[3] – Mehta, H., Kanani, P. and Lande, P., 2019. Google maps. *International Journal of Computer Applications*, *178*(8), pp.41-46.

[4] - Morawska, L., Thai, P.K., Liu, X., Asumadu-Sakyi, A., Ayoko, G., Bartonova, A., Bedini, A., Chai, F., Christensen, B., Dunbabin, M. and Gao, J., 2018. Applications of low-cost sensing technologies for air quality monitoring and exposure assessment: How far have they gone?. *Environment international*, *116*, pp.286-299.

[5] - Lashin, M.M., 2014. Different applications of programmable logic controller (PLC). *International Journal of Computer Science, Engineering and Information Technology (IJCSEIT)*, *4*(1), pp.27-32.

[6] - Seng, W.C. and Mirisaee, S.H., 2009, August. A new method for fruits recognition system. In *2009 International conference on electrical engineering and informatics* (Vol. 1, pp. 130-134). IEEE. [7] - Mojekwu, T.O. and Anumudu, C.I., 2015. Advanced techniques for morphometric analysis in fish. *Journal of Aquaculture Research & Development*, *6*(8), pp.1-6.

[8] - Silva, J.P.M., da Silva, M.L.M., da Silva, E.F., da Silva, G.F., de Mendonca, A.R., Cabacinha, C.D., Araujo, E.F., Santos, J.S., Vieira, G.C., de Almeida, M.N.F. and de Moura Fernandes, M.R., 2019. Computational techniques applied to volume and biomass estimation of trees in Brazilian savanna. *Journal of environmental management*, *249*, p.109368.

[9] - Salinas, R.A., Raff, U. and Farfan, C., 2005. Automated estimation of rock fragment distributions using computer vision and its application in mining. *IEE Proceedings-Vision, Image and Signal Processing*, *152*(1), pp.1-8

[10] - Tomin, M., Török, D., Pászthy, T. and Kmetty, Á., 2023. Deformation analysis in impact testing of functionally graded foams by the image processing of high-speed camera recordings. *Polymer Testing*, p.108014.

[11] - Kalantar, A., Edan, Y., Gur, A. and Klapp, I., 2020. A deep learning system for single and overall weight estimation of melons using unmanned aerial vehicle images. *Computers and Electronics in Agriculture*, *178*, p.105748.

[12] – Bansal, A., Bajpai, R. and Saini, J.P., 2007, March. Simulation of image enhancement techniques using Matlab. In *First Asia International Conference on Modelling & Simulation (AMS'07)* (pp. 296-301). IEEE.

[13] – Agrawal, P., Shriwastava, S.K. and Limaye, S.S., 2010, July. MATLAB implementation of image segmentation algorithms. In *2010 3rd International Conference on Computer Science and Information Technology* (Vol. 3, pp. 427-431). IEEE.

[14] – Sharma, D., 2013. 2D to 3D Conversion Using SINGLE Input by Spatial Transformation Using MATLAB. *International Journal of Emerging Technology and Advanced Engineering*, *3*(1).

[15] – Arzuaga-Cruz, E., Jimenez-Rodriguez, L.O., Velez-Reyes, M., Kaeli, D., Rodriguez-Diaz, E., Velazquez-Santana, H.T., Castrodad-Carrau, A., Santos-Campis, L.E. and Santiago, C., 2004, September. A MATLAB toolbox for hyperspectral image analysis. In *IGARSS 2004. 2004 IEEE International Geoscience and Remote Sensing Symposium* (Vol. 7, pp. 4839-4842). IEEE.

[16] – Kumar, T. and Verma, K., 2010. A Theory Based on Conversion of RGB image to Gray image. *International Journal of Computer Applications*, *7*(2), pp.7-10.

[17] – Dangphonthong, D. and Pinate, W., 2016, January. Analysis of weight egg using image processing. In *Proceedings of Academics World 17th International Conference. Tokyo, Japan* (pp. 55-57).

[18] - Sharma, R., Kumar, M. and Alam, M.S., 2021. Image processing techniques to estimate weight and morphological parameters for selected wheat refractions. *Scientific Reports*, *11*(1), p.20953.

[19] - *120cm Portable Aluminum Folding Table Party garden BBQ camping table, 3 gear adjustable height lightweight aluminum foldable table for outdoor picnic cooking, white, unfolding size: 120X60X70/62/55cm* (no date) *Amazon.co.uk: Home & Kitchen*

[20] - Noh, Y., Sareh, S., Würdemann, H., Liu, H., Back, J., Housden, J., Rhode, K. and Althoefer, K., 2015. Three-axis fiber-optic body force sensor for flexible manipulators. *IEEE Sensors Journal*, *16*(6), pp.1641-1651.

Appendices

Appendix A – Management of the Project

Task	Expected Start Date	Expected End Date	Duration
Literature review	01/10/2022	22/10/2022	21
Selection of CAD software and programming language	23/10/2022	28/10/2022	5
Conceptual design	29/10/2022	12/11/2022	14
CAD Modelling and design refinement	13/11/2022	27/11/2022	14
Finite Element Analysis (FEA)	28/11/2022	05/12/2022	7
Development of computer vision application and GUI	06/12/2022	20/12/2022	14
Prototype fabrication	21/12/2022	13/01/2023	23
Calibration and validation	14/01/2023	26/01/2023	12
Analysis of potential applications and market demand	27/01/2023	03/02/2023	7
Final report writing and documentation	04/02/2023	24/04/2023	79
Poster and presentation preparation	01/04/2023	24/04/2023	23

The project ended up taking longer than expected because of many reasons. One of the main reasons was personal issues which substantially delayed initial progress in the project. Once the project was started many issues were encountered during the 'Prototype fabrication' stage of the project. This is because there were many issues with the 3D printers repeatedly failing prints as well as a period of time where there was no filament available.

Appendix A.1 Project Gantt Chart

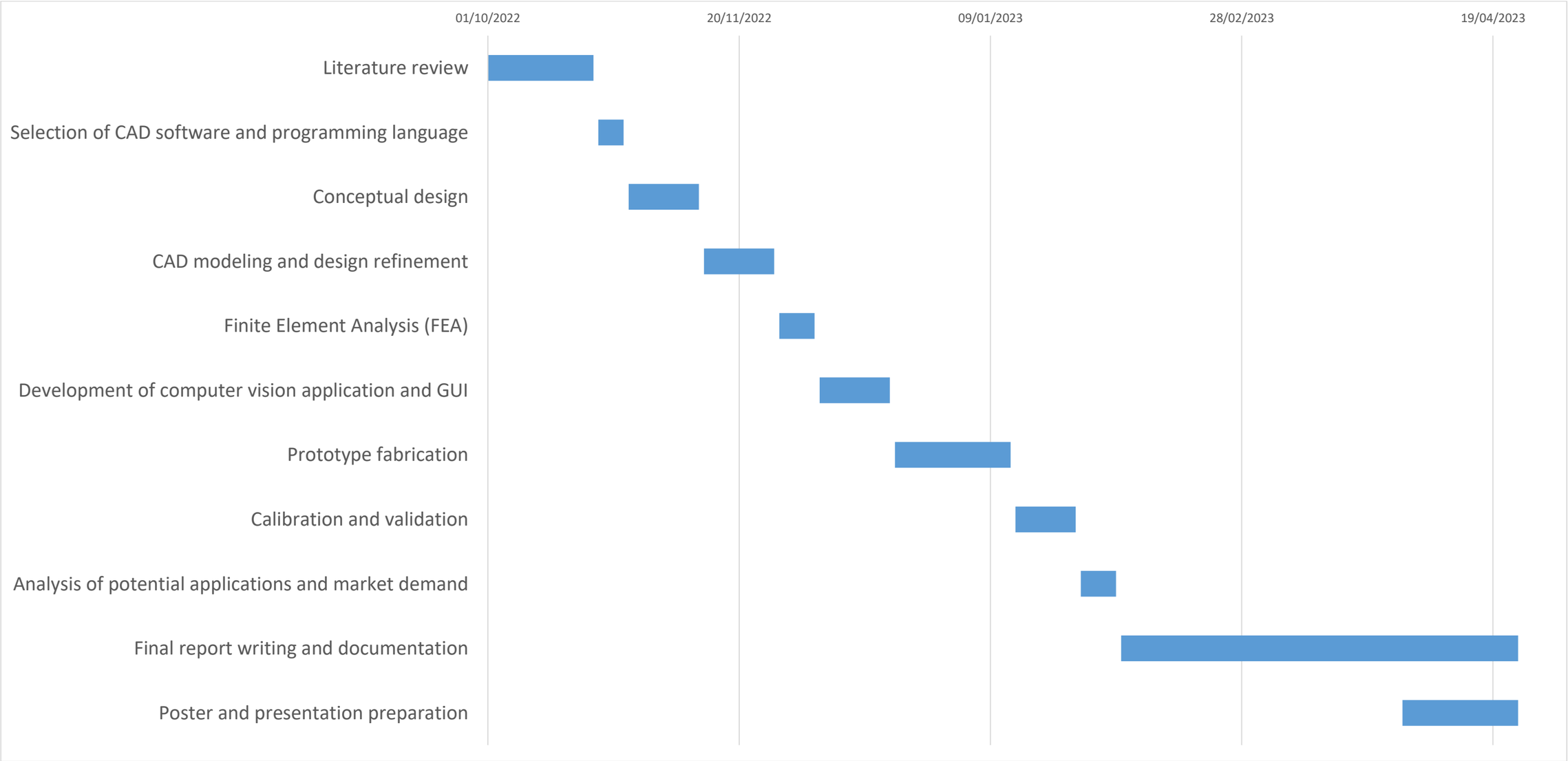

Appendix B – GUI MATLAB Script

```
% Initialize the camera
cam = webcam();

% Create the GUI window
fig = uifigure('Name', 'Image Analysis');
fig.Position = [200 200 700 500];

% Create the image axes
imgAxes = uiaxes('Parent', fig, 'Position', [50 50 400 400]);

% Create the text labels for displaying the pixel count and centroid positions
labelPos = [450 350 100 20];
labelCount1 = uilabel('Parent', fig, 'Position', labelPos);
labelCount2 = uilabel('Parent', fig, 'Position', labelPos + [0 -50 0 0]);
labelCount3 = uilabel('Parent', fig, 'Position', labelPos + [0 -100 0 0]);
labelCount4 = uilabel('Parent', fig, 'Position', labelPos + [0 -150 0 0]);

labelPos = [550 400 100 20];
labelCentroidX1 = uilabel('Parent', fig, 'Position', labelPos);
labelCentroidX2 = uilabel('Parent', fig, 'Position', labelPos + [0 -50 0 0]);
labelCentroidX3 = uilabel('Parent', fig, 'Position', labelPos + [0 -100 0 0]);
labelCentroidX4 = uilabel('Parent', fig, 'Position', labelPos + [0 -150 0 0]);

labelPos = [550 200 100 20];
labelCentroidY1 = uilabel('Parent', fig, 'Position', labelPos);
labelCentroidY2 = uilabel('Parent', fig, 'Position', labelPos + [0 -50 0 0]);
labelCentroidY3 = uilabel('Parent', fig, 'Position', labelPos + [0 -100 0 0]);
labelCentroidY4 = uilabel('Parent', fig, 'Position', labelPos + [0 -150 0 0]);

labelPos = [650 200 100 20];
labelMass = uilabel('Parent', fig, 'Position', labelPos);

% Create the main loop for capturing and processing the image
while isvalid(fig)
    % Capture the image from the camera
    img = snapshot(cam);

       % Apply Gaussian filter
    img_filtered = imgaussfilt(img, 4); % The second argument is the standard
deviation of the Gaussian filter

    % Convert the image to grayscale
    bwImg = im2bw(img_filtered);


    % Split the binary image into 4 equal sections
    [h, w] = size(bwImg);
    sectionWidth = w/2;
    sectionHeight = h/2;

    section1 = bwImg(1:sectionHeight, 1:sectionWidth);
    section2 = bwImg(1:sectionHeight, sectionWidth+1:end);
    section3 = bwImg(sectionHeight+1:end, 1:sectionWidth);
    section4 = bwImg(sectionHeight+1:end, sectionWidth+1:end);

    % Count the number of white pixels in each section
    count1 = sum(section1(:));
    count2 = sum(section2(:));
    count3 = sum(section3(:));
    count4 = sum(section4(:));

    % Compute the centroid positions of the white pixels in each section
props1 = regionprops(section1, 'Centroid');
props2 = regionprops(section2, 'Centroid');
```

```
props3 = regionprops(section3, 'Centroid');
props4 = regionprops(section4, 'Centroid');

if ~isempty(props1)
    centroid1 = props1(1).Centroid;
else
    centroid1 = [NaN NaN];
end

if ~isempty(props2)
    centroid2 = props2(1).Centroid;
else
    centroid2 = [NaN NaN];
end

if ~isempty(props3)
    centroid3 = props3(1).Centroid;
else
    centroid3 = [NaN NaN];
end

if ~isempty(props4)
    centroid4 = props4(1).Centroid;
else
    centroid4 = [NaN NaN];
end

% Compute the x and y distance of each centroid from the center of the whole image
center = [w/2 h/2];

if ~isnan(centroid1)
    dist1 = centroid1 - center;
    xDist1 = -dist1(1);
    yDist1 = -dist1(2);
    xDist1 = round(xDist1);
    yDist1 = round(yDist1);
else
    xDist1 = NaN;
    yDist1 = NaN;
end

if ~isnan(centroid2)
    dist2 = centroid2 - center;

    xDist2 = centroid2(1);
    yDist2 = -dist2(2);
    xDist2 = round(xDist2);
    yDist2 = round(yDist2);
else
    xDist2 = NaN;
    yDist2 = NaN;
end

if ~isnan(centroid3)
    dist3 = centroid3 - center;
    xDist3 = -dist3(1);
    yDist3 = centroid3(2);
    xDist3 = round(xDist3);
    yDist3 = round(yDist3);
else
    xDist3 = NaN;
    yDist3 = NaN;

end

if ~isnan(centroid4)
    dist4 = centroid4 - center;
```

```
    xDist4 = centroid4(1);
    yDist4 = centroid4(2);
    xDist4 = round(xDist4);
    yDist4 = round(yDist4);
else
    xDist4 = NaN;
    yDist4 = NaN;
end

C = [-0.0104168629833224  -0.00944917403780000      -0.0230974827719833
         0.00729259966113088       -0.118004606975970        0.754709747649660
         -0.243793005361824        -0.154573237617072        0.230557722618885
         0.535561085233072         0.401978711937218         0.289650104588845
1.83762912284827e-06      -0.000143896119637691     0.000199604850738702      -
0.000101329187907418      -0.00283636198871067      -0.00850192383249774      -
0.00102472041128066       -0.00107521427393267      -0.00133288102373877
         0.00449615965863117       0.00907332663274933       0.00471568559239377
0.000274456981798683      -5.43375482731146e-06     -0.000287773457796409     -
2.56075659981518e-05      0.00480186166884118       -0.00131996042694900
         0.00204177305680907       -0.00608963909954442      -0.00693098041141154
         0.00949937042098853       -0.00348653848228535      0.00468544264849634];

X =
[count1;count2;count3;count4;xDist1;yDist1;xDist2;yDist2;xDist3;yDist3;xDist4;yDist
4];

FMM = C * X;

Mass = FMM()

% Display the binary image and the results in the GUI
imshow(bwImg, 'Parent', imgAxes);

labelCount1.Text = sprintf('Count 1: %d', count1);
labelCount2.Text = sprintf('Count 2: %d', count2);
labelCount3.Text = sprintf('Count 3: %d', count3);
labelCount4.Text = sprintf('Count 4: %d', count4);

labelCentroidX1.Text = sprintf('X1: %d', xDist1);
labelCentroidX2.Text = sprintf('X2: %d', xDist2);
labelCentroidX3.Text = sprintf('X3: %d', xDist3);
labelCentroidX4.Text = sprintf('X4: %d', xDist4);

labelCentroidY1.Text = sprintf('Y1: %d', yDist1);
labelCentroidY2.Text = sprintf('Y2: %d', yDist2);
labelCentroidY3.Text = sprintf('Y3: %d', yDist3);
labelCentroidY4.Text = sprintf('Y4: %d', yDist4);

labelMass.Text = sprintf('Mass: %d', Mass);

drawnow;
end

% Clean up
delete(cam);
delete(fig);
```

Appendix C – Plotting MATLAB Script

```
% Initialize webcam
cam = webcam();

% Create the first figure
fig1 = figure;

% Initialize the x-axis and y-axis data for figure 1
x1 = 0;
y1 = [0, 0, 0, 0];

% Create the second figure
fig2 = figure;

% Initialize the x-axis and y-axis data for figure 2
x2 = 0;
y2 = [0, 0, 0, 0, 0, 0, 0, 0];

% Start the loop
while isvalid(fig1) && isvalid(fig2)
    % Capture the image from the camera
    img = snapshot(cam);

    % Apply Gaussian filter
    img_filtered = imgaussfilt(img, 4); % The second argument is the standard
deviation of the Gaussian filter

    % Convert the image to grayscale
    bwImg = im2bw(img_filtered);

    % Split the binary image into 4 equal sections
    [h, w] = size(bwImg);
    sectionWidth = w/2;
    sectionHeight = h/2;

    section1 = bwImg(1:sectionHeight, 1:sectionWidth);
    section2 = bwImg(1:sectionHeight, sectionWidth+1:end);
    section3 = bwImg(sectionHeight+1:end, 1:sectionWidth);
    section4 = bwImg(sectionHeight+1:end, sectionWidth+1:end);

    % --- Update the first figure ---
    figure(fig1); % Set the focus on the first figure

    % Count the number of white pixels in each section
    count1 = sum(section1(:));
    count2 = sum(section2(:));
    count3 = sum(section3(:));
    count4 = sum(section4(:));

    % Update the x-axis data for figure 1
    x1 = [x1, x1(end)+1];

    % Update the y-axis data for figure 1
    y1 = [y1; [count1, count2, count3, count4]];

    % Update the line plot for figure 1
    plot(x1, y1);
    title('Live Count');
    xlabel('Time (s)');
    ylabel('Count');
    legend('Section 1', 'Section 2', 'Section 3', 'Section 4')

    % Set the y-axis limits for figure 1
    ylim([4500, 6500]);
```

```
    % --- Update the second figure ---
    figure(fig2); % Set the focus on the second figure

    % Calculate the centroids for each section
    props1 = regionprops(section1, 'Centroid');
    props2 = regionprops(section2, 'Centroid');
    props3 = regionprops(section3, 'Centroid');
    props4 = regionprops(section4, 'Centroid');

    if ~isempty(props1)
    centroid1 = props1(1).Centroid;
else
    centroid1 = [NaN NaN];
end

if ~isempty(props2)
    centroid2 = props2(1).Centroid;
else
    centroid2 = [NaN NaN];
end

if ~isempty(props3)
    centroid3 = props3(1).Centroid;
else
    centroid3 = [NaN NaN];
end

if ~isempty(props4)
    centroid4 = props4(1).Centroid;
else
    centroid4 = [NaN NaN];
end

% Compute the x and y distance of each centroid from the center of the whole image
center = [w/2 h/2];

if ~isnan(centroid1)
    dist1 = centroid1 - center;
    xDist1 = -dist1(1);
    yDist1 = -dist1(2);
    xDist1 = round(xDist1);
    yDist1 = round(yDist1);
else
    xDist1 = NaN;
    yDist1 = NaN;
end

if ~isnan(centroid2)
    dist2 = centroid2 - center;

    xDist2 = centroid2(1);
    yDist2 = -dist2(2);
    xDist2 = round(xDist2);
    yDist2 = round(yDist2);
else
    xDist2 = NaN;
    yDist2 = NaN;
end

if ~isnan(centroid3)
    dist3 = centroid3 - center;
    xDist3 = -dist3(1);
    yDist3 = centroid3(2);
    xDist3 = round(xDist3);
    yDist3 = round(yDist3);
else
    xDist3 = NaN;
```

```
    yDist3 = NaN;

end

if ~isnan(centroid4)
    dist4 = centroid4 - center;
    xDist4 = centroid4(1);
    yDist4 = centroid4(2);
    xDist4 = round(xDist4);
    yDist4 = round(yDist4);
else
    xDist4 = NaN;
    yDist4 = NaN;
end


x2 = [x2, x2(end)+1];

    % Update the y-axis data for figure 2
    y2 = [y2; [xDist1, yDist1, xDist2, yDist2, xDist3, yDist3, xDist4, yDist4]];

    % Update the line plot for figure 2
    plot(x2, y2);
    title('Live Distance');
xlabel('Time (s)');
ylabel('Distance');
legend('X1', 'Y1', 'X2', 'Y2', 'X3', 'Y3', 'X4', 'Y4')

% Set the y-axis limits for figure 2
ylim([80, 140]);

% Pause for a short time
pause(0.01);
end

% Release the webcam
clear cam;
```

Appendix D – Calibration MATLAB Script

```
close all

% Load the data
data = xlsread('ALL_IN_ONE.xlsx');
X = data(1:55,4:15);
Y = data(1:55,1:3);

Xt = transpose(X);
Yt = transpose(Y);

calibration_matrix = zeros(3, 12);

% Perform linear regression using 'regress' function for each output component
for i = 1:3
    calibration_matrix(i, :) = regress(Y(:, i), X);
end

predicted = calibration_matrix * Xt;



Pos1x = transpose(data(1:11,4:15));
Pos2x = transpose(data(12:22,4:15));
Pos3x = transpose(data(23:33,4:15));
Pos4x = transpose(data(34:44,4:15));
Pos5x = transpose(data(45:55,4:15));
Pos6x = transpose(data(56:66,4:15));
Pos7x = transpose(data(67:77,4:15));
Pos8x = transpose(data(78:88,4:15));
Pos9x = transpose(data(89:99,4:15));

Pos1 = calibration_matrix * Pos1x;
Pos2 = calibration_matrix * Pos2x;
Pos3 = calibration_matrix * Pos3x;
Pos4 = calibration_matrix * Pos4x;
Pos5 = calibration_matrix * Pos5x;
Pos6 = calibration_matrix * Pos6x;
Pos7 = calibration_matrix * Pos7x;
Pos8 = calibration_matrix * Pos8x;
Pos9 = calibration_matrix * Pos9x;


figure(1)
plot(data(1:11,1),'LineWidth',1);
hold on
plot(Pos1(1,:),'LineWidth',1);
hold on
plot(data(1:11,2),'LineWidth',1);
hold on
plot(Pos1(2,:),'LineWidth',1);
hold on
plot(data(1:11,3),'LineWidth',1);
hold on
plot(Pos1(3,:),'LineWidth',1);

legend('Fz', 'Predicted Fz','Mx', 'Predicted Mx', 'My', 'Predicted My');
ylabel('Force [N]')
set(legend,'FontSize',20);
legend('Location','southeast')
set(gca,'FontSize',20);
```

```
figure(2)
plot(data(56:66,1),'LineWidth',1);
hold on
plot(Pos6(1,:),'LineWidth',1);
hold on
plot(data(56:66,2),'LineWidth',1);
hold on
plot(Pos6(2,:),'LineWidth',1);
hold on
plot(data(56:66,3),'LineWidth',1);
hold on
plot(Pos6(3,:),'LineWidth',1);

legend('Fz', 'Predicted Fz','Mx', 'Predicted Mx', 'My', 'Predicted My');
ylabel('Force [N] / Moment [Ncm]')
set(legend,'FontSize',20);
legend('Location','northeast')
set(gca,'FontSize',20);

figure(3)
plot(data(67:77,1),'LineWidth',1);
hold on
plot(Pos7(1,:),'LineWidth',1);
hold on
plot(data(67:77,2),'LineWidth',1);
hold on
plot(Pos7(2,:),'LineWidth',1);
hold on
plot(data(67:77,3),'LineWidth',1);
hold on
plot(Pos7(3,:),'LineWidth',1);

legend('Fz', 'Predicted Fz','Mx', 'Predicted Mx', 'My', 'Predicted My');
ylabel('Force [N] / Moment [Ncm]')
set(legend,'FontSize',20);
legend('Location','southeast')
set(gca,'FontSize',20);

figure(4)
plot(data(78:88,1),'LineWidth',1);
hold on
plot(Pos8(1,:),'LineWidth',1);
hold on
plot(data(78:88,2),'LineWidth',1);
hold on
plot(Pos8(2,:),'LineWidth',1);
hold on
plot(data(78:88,3),'LineWidth',1);
hold on
plot(Pos8(3,:),'LineWidth',1);

legend('Fz', 'Predicted Fz','Mx', 'Predicted Mx', 'My', 'Predicted My');
ylabel('Force [N] / Moment [Ncm]')
set(legend,'FontSize',12);
legend('Location','southeast')
set(gca,'FontSize',20);

figure(5)
plot(data(89:99,1),'LineWidth',1);
hold on
plot(Pos9(1,:),'LineWidth',1);
hold on
plot(data(89:99,2),'LineWidth',1);
hold on
plot(Pos9(2,:),'LineWidth',1);
hold on
```

```
plot(data(89:99,3),'LineWidth',1);
hold on
plot(Pos9(3,:),'LineWidth',1);

legend('Fz', 'Predicted Fz','Mx', 'Predicted Mx', 'My', 'Predicted My');
ylabel('Force [N] / Moment [Ncm]')
set(legend,'FontSize',20);
legend('Location','northeast')
set(gca,'FontSize',20);
```

Appendix E – Risk Assessment

1. Hot Knife

Potential Hazards:

- Burns from hot surfaces or blades
- Fire hazard due to contact with flammable materials
- Cuts from sharp edges

Risk Mitigation Measures:

- Do not use the hot knife near flammable materials
- Handle the hot knife carefully

2. 100g Weights

Potential Hazards:

- Injuries from dropping weights on oneself or others
- Tripping hazards if weights are not stored properly

Risk Mitigation Measures:

- Store weights on proper racks or designated areas
- Keep the work area clear and free from obstacles

3. 3D Printer

Potential Hazards:

- Burns from a hot extruder or heated bed
- Fire hazard due to overheating components or electrical issues

- Inhaling toxic fumes from melting materials

Risk Mitigation Measures:

- Operate the 3D printer in a well-ventilated area
- Keep a fire extinguisher nearby when using a 3D printer
- Regularly inspect and maintain the 3D printer, including cleaning the extruder and checking for loose connections
- Do not touch the extruder or heated bed while in operation

4. Chemical Bath

Potential Hazards:

- Chemical burns or skin irritation from direct contact
- Inhalation of toxic fumes or vapours
- Fire or explosion hazard due to volatile chemicals

Risk Mitigation Measures:

- Wear appropriate personal protective equipment, including gloves, goggles, and a lab coat
- Work in a well-ventilated area or fume hood
- Store chemicals in appropriate containers and in a designated storage area
- Follow proper chemical disposal procedures
- Keep a fire extinguisher and an eyewash station nearby

5. Electrical Devices

Potential Hazards:

- Electrical shock from damaged cords, plugs, or exposed wiring

- Fire hazard due to electrical faults or overloading circuits
- Tripping hazards from cords

Risk Mitigation Measures:

- Regularly inspect electrical devices for damage or wear and replace as necessary
- Ensure devices are properly grounded and do not overload circuits
- Use surge protectors and avoid using extension cords when possible
- Keep work areas clear of loose cords or clutter that may cause tripping

Keep liquids away from electrical devices to prevent spills and damage