Adafruit Trinket M0

https://www.adafruit.com/product/3500

- Power
- GND
- Control
- CircuitPython Name
- Arduino Name
- GPIO
- INT
- DAC/AREF
- ADC
- Touch
- SERCOM
- SERCOM Alt
- Timer
- Timer Alt
- Special

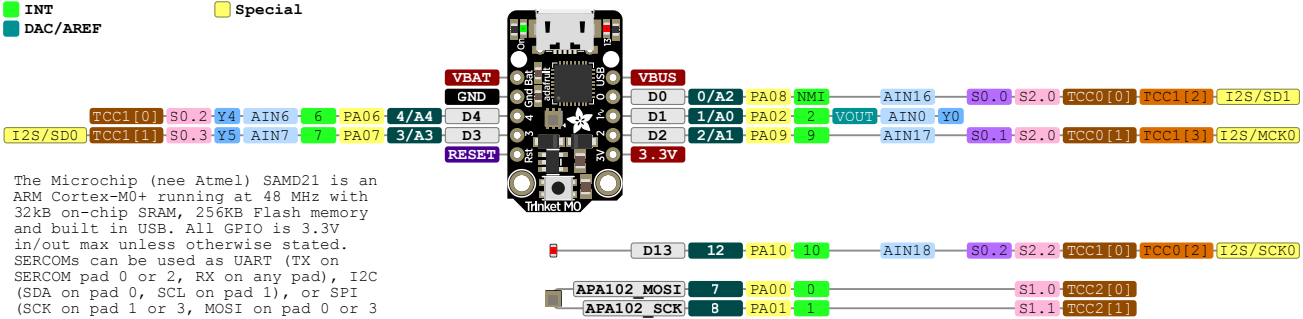

The Microchip (nee Atmel) SAMD21 is an ARM Cortex-M0+ running at 48 MHz with 32kB on-chip SRAM, 256KB Flash memory and built in USB. All GPIO is 3.3V in/out max unless otherwise stated. SERCOMs can be used as UART (TX on SERCOM pad 0 or 2, RX on any pad), I2C (SDA on pad 0, SCL on pad 1), or SPI (SCK on pad 1 or 3, MOSI on pad 0 or 3 (SCK on pad 1) or pad 0 or 2 (SCK on pad 3), MISO on any pad remaining)