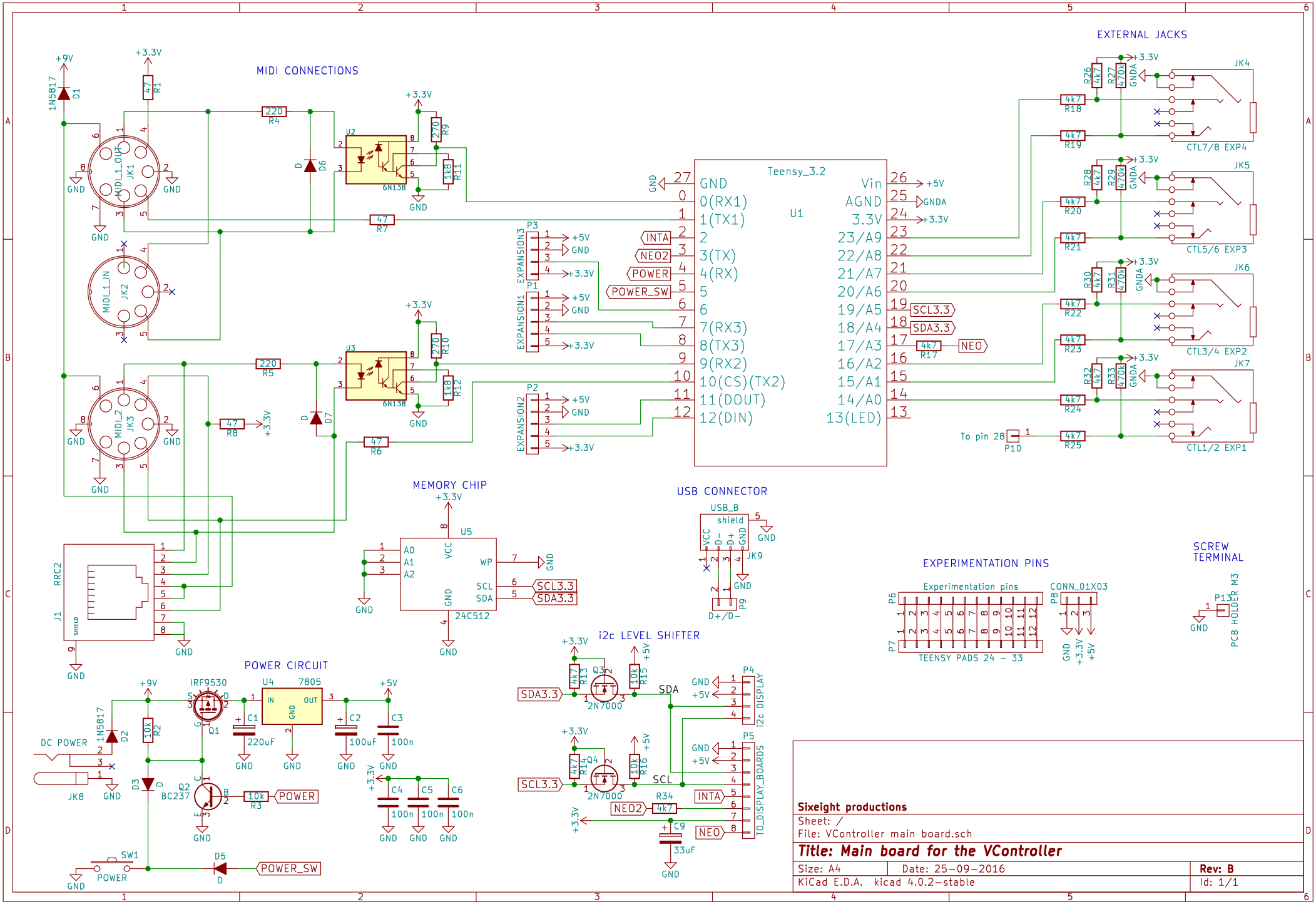
MIDI CONNECTIONS
EXTERNAL JACKS
MEMORY CHIP
USB CONNECTOR
EXPERIMENTATION PINS
SCREW TERMINAL
POWER CIRCUIT
i2c LEVEL SHIFTER
Teensy_3.2
U1
MIDI_1_OUT
MIDI_1_IN
MIDI_2
RRC2
24C512
6N138
IRF9530
7805
DC POWER
POWER
POWER_SW
TEENSY PADS 24 – 33
PCB HOLDER M3
TO_DISPLAY_BOARDS
i2c DISPLAY
Sixeight productions
Sheet: /
File: VController main board.sch
Title: Main board for the VController
Size: A4
Date: 25-09-2016
Rev: B
KiCad E.D.A. kicad 4.0.2-stable
Id: 1/1