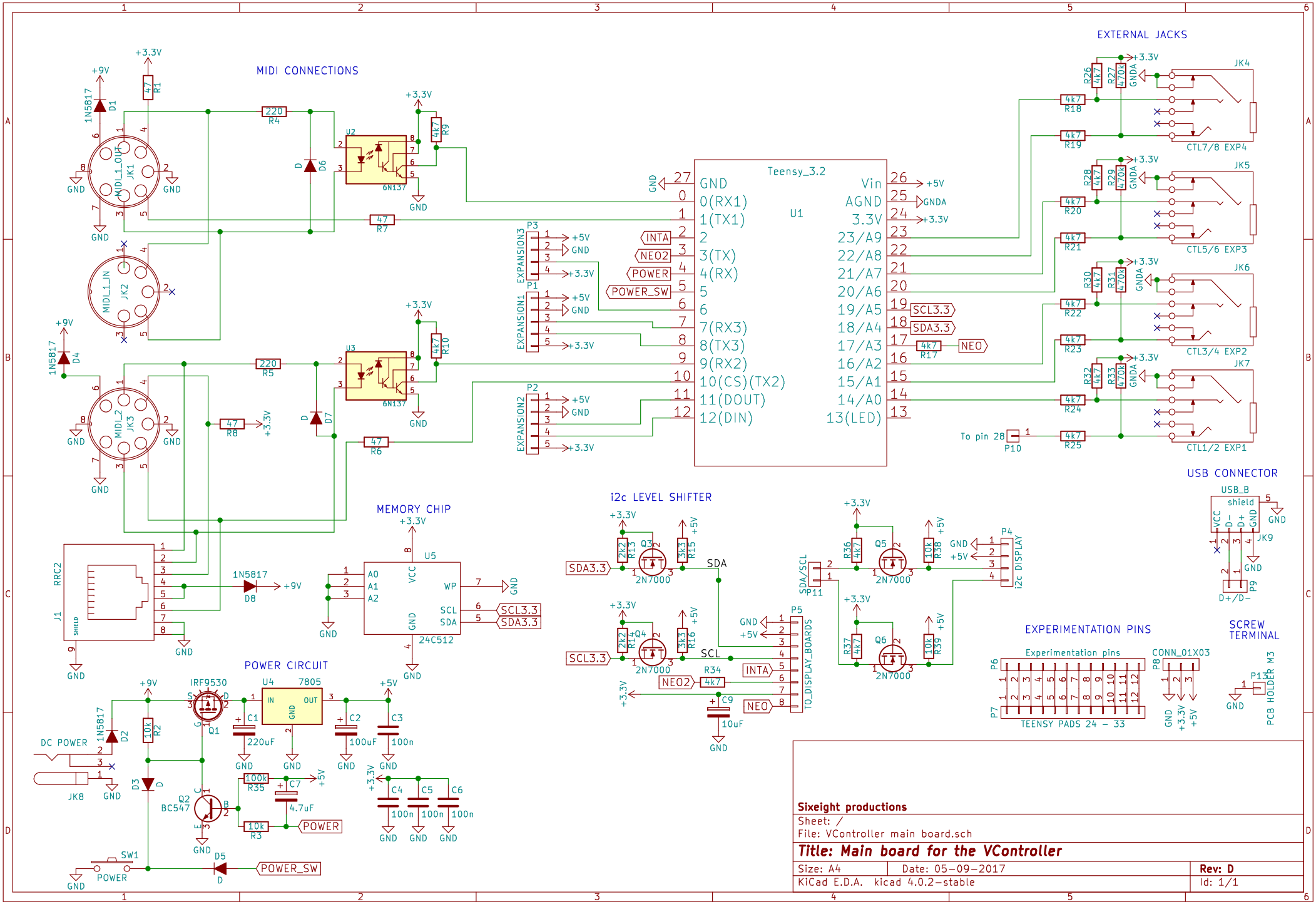
MIDI CONNECTIONS
EXTERNAL JACKS
Teensy_3.2
U1
MEMORY CHIP
i2c LEVEL SHIFTER
USB CONNECTOR
POWER CIRCUIT
EXPERIMENTATION PINS
SCREW TERMINAL
Experimentation pins
TEENSY PADS 24 – 33
DC POWER
Sixeight productions
Sheet: /
File: VController main board.sch
Title: Main board for the VController
Size: A4
Date: 05-09-2017
Rev: D
KiCad E.D.A. kicad 4.0.2-stable
Id: 1/1