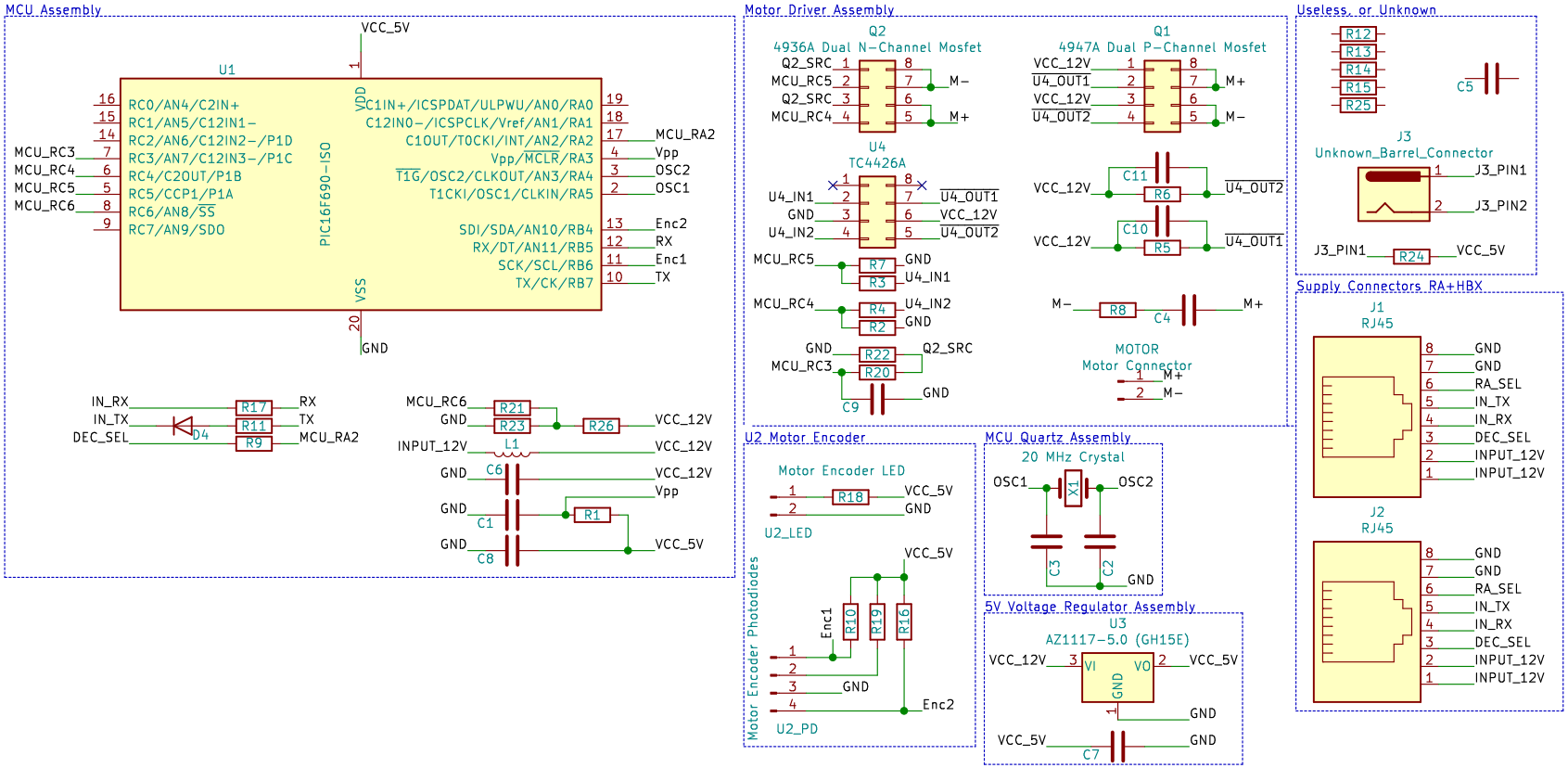

Bresser EXOS2 GoTo DEC Axis Motor Rev.1.03 (2016-06)
Reverse Engineered Schematics

Sheet: /
File: JOC-SkyVision-DEC-Motor-Rev.1.03.sch

Title:

Size: A4	Date:	**Rev:**
KiCad E.D.A. kicad (5.1.10)-1		Id: 1/1