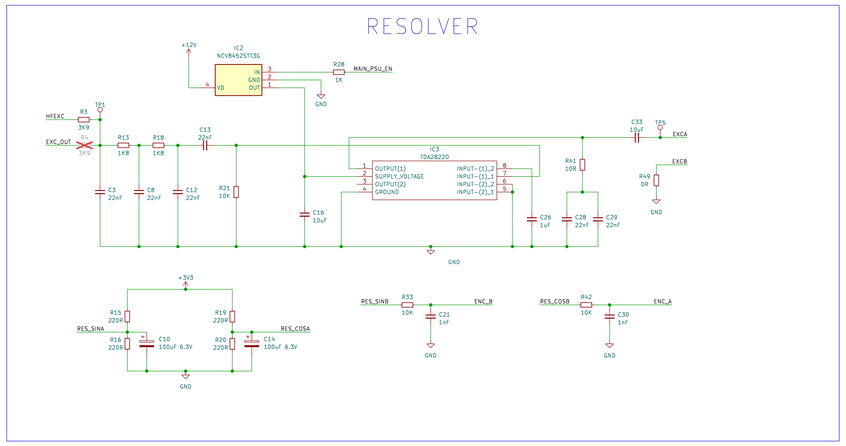

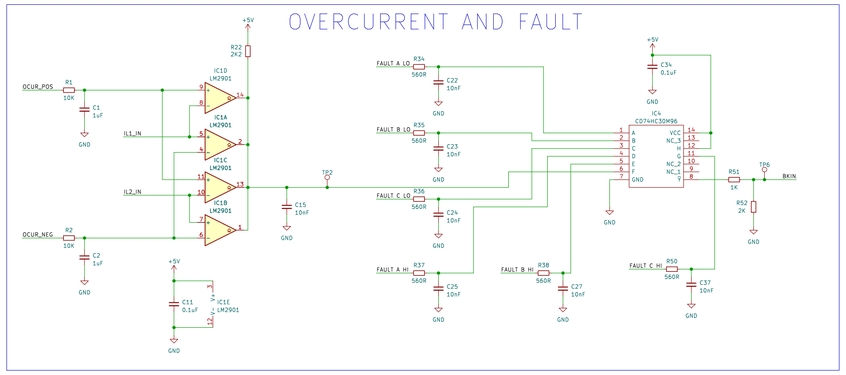

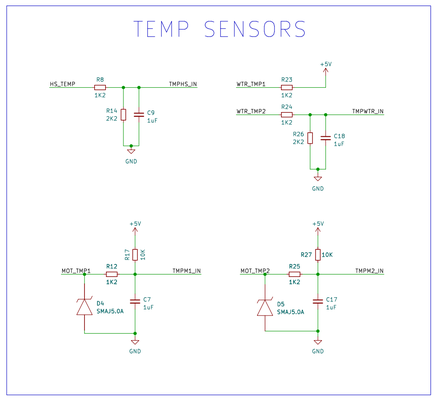

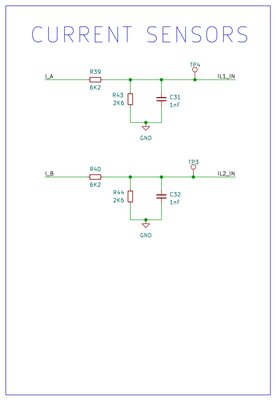

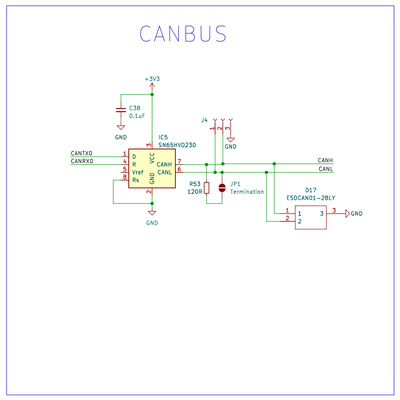

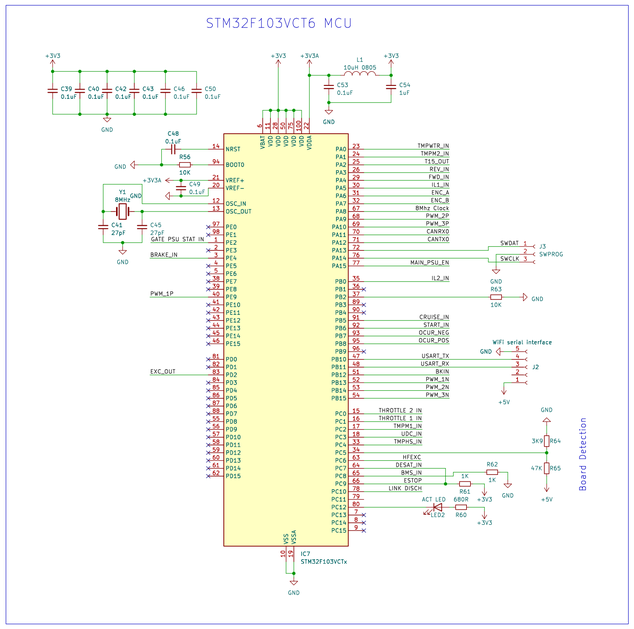

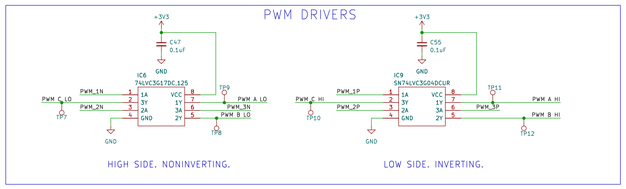

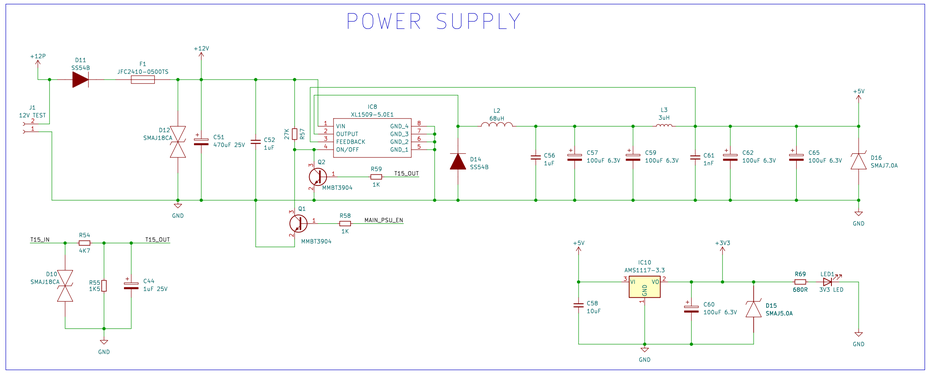

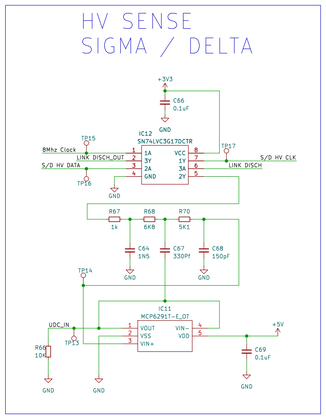

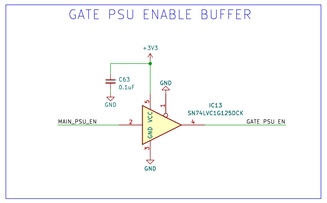

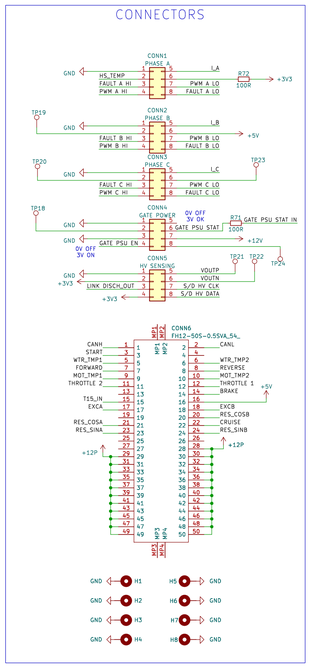

28-pin inverter connector
1 - Start
2 - Motortemp 1
3 - Throttle 1
4 - Throttle 2
5 - Cruise
6 - Brake
7 - +12v (kl30)
8 - Motortemp 2
9
10
11
12
13 - +15 Ignition (kl15)
14 - +5v Out
15 - CAN-L
16 - Motortemp 1
17 - Resolver SIN S4
18 - Resolver SIN S2
19 - Resolver EXC R2
20
21
22 - CAN-H
23 - Motortemp 2
24 - Resolver COS S3
25 - Resolver COS S1
26 - Resolver EXC R1
27 - Reverse
28 - Forward

_- TO DO -_

* Link discharge Logic level or driver needed?
* HS_Temp? Seems like CONN1 pin2 and pin4?
* Should R27 be 10ohm? It's 10k in M3
* Should we keep the ESD protections on the board even if there is protection circuits on the OEM connector board? Do Not Mount?

Sheet: /	
File: FDU_V1.kicad_sch	
Title: **IPACE FRONT DRIVE UNIT**	
Size: A1 / Date: 2025-10-28	Rev: 1
KiCad E.D.A. 9.0.7	Id: 1/1