EVBMW CANLOGGER 6000 V1

CONNECTORS

CANBUS

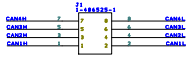

USB POWER

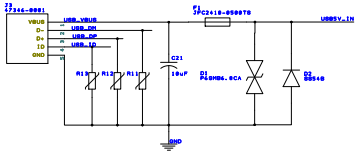

STM32F105RBT6 CPU

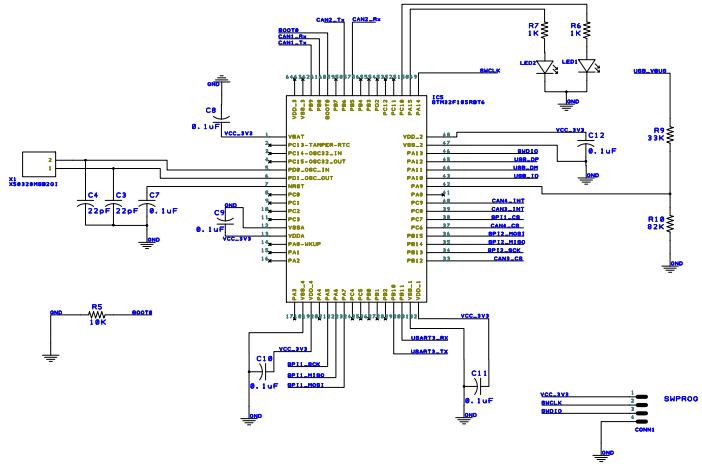

SD CARD

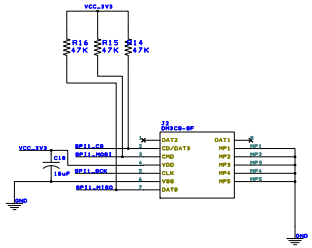

WIFI MODULE

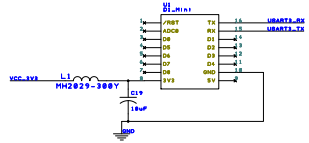

HS CAN BUSES

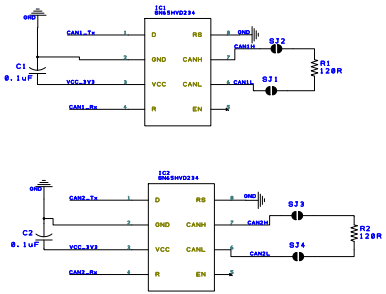

POWER SUPPLY

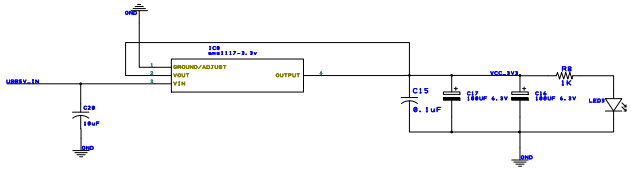
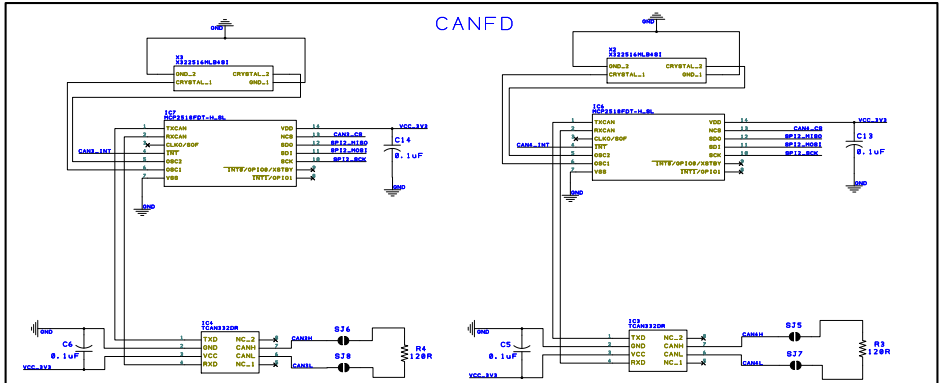
CANFD