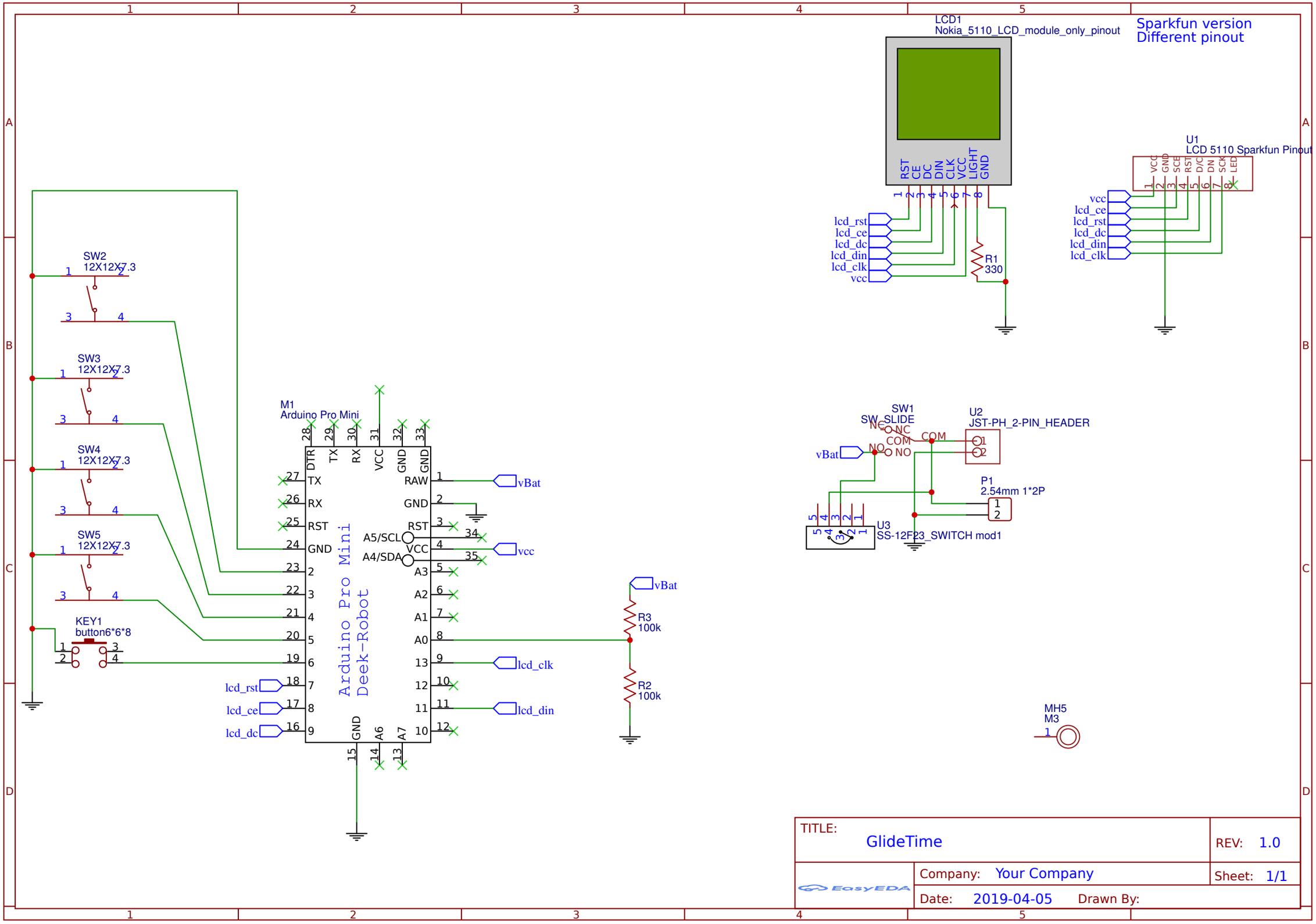
LCD1
Nokia_5110_LCD_module_only_pinout
Sparkfun version
Different pinout
RST
CE
DC
DIN
CLK
VCC
LIGHT
GND
lcd_rst
lcd_ce
lcd_dc
lcd_din
lcd_clk
vcc
R1
330
U1
LCD 5110 Sparkfun Pinout
VCC
GND
SCE
RST
D/C
DN
SCK
LED
SW2
12X12X7.3
SW3
12X12X7.3
SW4
12X12X7.3
SW5
12X12X7.3
KEY1
button6*6*8
M1
Arduino Pro Mini
DTR
TX
RX
VCC
GND
GND
RAW
GND
RST
A5/SCL
A4/SDA
VCC
A3
A2
A1
A0
GND
A6
A7
Arduino Pro Mini
Deek-Robot
vBat
vcc
lcd_clk
lcd_din
lcd_rst
lcd_ce
lcd_dc
R3
100k
R2
100k
SW1
SW-SLIDE
NC
COM
NO
U2
JST-PH_2-PIN_HEADER
P1
2.54mm 1*2P
U3
SS-12F23_SWITCH mod1
MH5
M3
TITLE:
GlideTime
REV: 1.0
Company: Your Company
Sheet: 1/1
Date: 2019-04-05
Drawn By:
EasyEDA