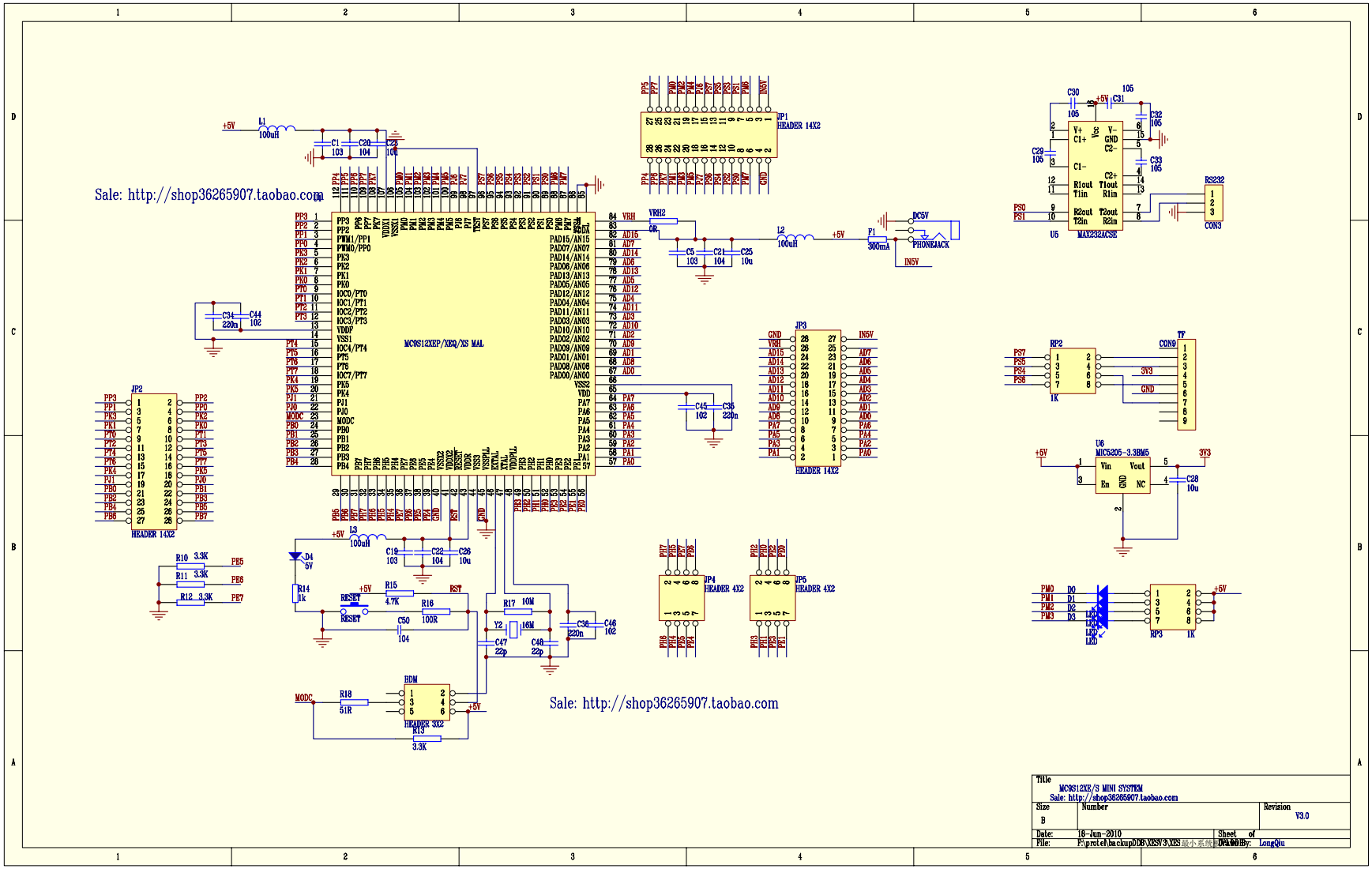
Sale: http://shop36265907.taobao.com
MC9S12XEP/XEQ/XS MAL
JP1 HEADER 14X2
JP2 HEADER 14X2
JP3 HEADER 14X2
JP4 HEADER 4X2
JP5 HEADER 4X2
BDM HEADER 3X2
MAX232ACSE
RS232 CON3
TF CON9
U6 MIC5205-3.3BM5
PHONEJACK
DC5V
IN5V
Sale: http://shop36265907.taobao.com
Title
MC9S12XE/S MINI SYSTEM
Sale: http://shop36265907.taobao.com
Size B
Number
Revision V3.0
Date: 18-Jun-2010
Sheet of
File: F:\protel\backup\DB\XESY3\XES最小系统.DDB
Drawn By: LongQiu