MAREK-LARS KRUUSEN'S TECHNOLOGY AND SCIENCE
PRESENTS

HUMAN TIME TRAVEL

PARANORMAL PHENOMENA AND SCIENCE

MAREK-LARS KRUUSEN
TALLINN, ESTONIA
UNIVISIOON@GMAIL.COM
NOVEMBER, 2023

All rights reserved. This (literary and visual) work is protected by copyright and international law. No part of this work may be reproduced by mechanical or electronic means or used in any other way, including photo reproduction and information storage presented in the work, without the permission of the copyright owner (i.e. the author of the given work). Unauthorized reproduction and distribution, or parts thereof, may result in severe civil and criminal penalties, subject to the maximum statutory penalty. The author can be contacted by email: *univisioon@gmail.com*.

Summary

Throughout history there have been documented and researched cases of human time travel. These cases are not very well known in the world and they are not very common either. Nevertheless, their frequency is much higher than cases of spontaneous combustion of the human body. According to statistics, there are actually far more cases than we actually know about. One reason is considered to be that people who have traveled through time do not dare to talk about it publicly for fear of getting a reputation of being crazy. However, the most extraordinary thing is that these cases can be explained by the theories mentioned before, in which a person would travel in time if the electric field of his charge changed throughout the space around him. These cases of time travel can be explained very precisely with the conclusions derived from this theory of time travel (1), which has been written down and presented in the entire preceding 1000+ pages of material. Therefore, it is extremely important to study and analyze these cases very thoroughly. These cases provide fairly objective evidence of the validity of the theory of time travel (1), or at least theoretical proof/plausibility. These cases have been studied for centuries and are well documented throughout history. One of the best-known investigative experts was Jenny Randles, who documented hundreds of cases of human time travel.

Real cases of human time travel: paranormal phenomena

The question inevitably arises that if, for example, the electric field of a charge around the human body is sufficient for time travel, why are there no known cases in the world in which case human time travel has manifested itself. Since people somewhere in the world receive an electrostatic charge every day, why haven't we heard that someone has indeed traveled in time. The formation of an electrostatic charge on the surface of the human body is actually a fairly common and even everyday phenomenon all over the world. Such a question is logical and directly follows from previous knowledge, in which a person would travel in time if the electric field of his charge changed in the entire space around him (1).

However, in fact there are many known cases in the world in which case people have traveled through time. This means that throughout history there have been documented and researched cases of human time travel. These cases are not very well known in the world and they are not very common either. Nevertheless, their frequency is much higher than cases of spontaneous combustion of the human body. According to statistics, there are actually far more cases than we actually know about. One reason is considered to be that people who have traveled through time do not dare to talk about it publicly for fear of getting a reputation of being crazy. However, the most extraordinary thing is that these cases can be explained by the theories mentioned before, in which a person would travel in time if the electric field of his charge changed throughout the space around him. These cases of time travel can be explained very precisely with the conclusions derived from this theory of time travel (1), which has been written down and presented in the entire preceding 1000+ pages of material. Therefore, it is extremely important to study and analyze these cases very thoroughly. These cases provide fairly objective evidence of the validity of the theory of time travel (1), or at least theoretical proof/plausibility. These cases have been studied for centuries and are well documented throughout history. One of the best-known investigative experts was Jenny Randles, who documented hundreds of cases of human time travel.

Millions of people around the world get an electrostatic charge, but not every one of them instantly travels through time. It is actually exactly the same with exiting the human body. For example, not all people who are clinically dead experience near-death experiences, or exit their bodies. A person's time travel and exit from the body can only take place in one specific spatial configuration of changes in the fields of electric charges, which sometimes manifests and sometimes does not manifest. This still makes these phenomena quite rare.

When time travel occurs, a changing field is created around the human body everywhere at once. This means that the energy field must change everywhere around the human body at the same time, not so that the field changes at one end of the body earlier and a little later at the other end of the body. This is a very, very important condition. In this sense, the time travel of a person takes place only in one specific spatial configuration of changes in electric fields of charges, which sometimes manifests and sometimes does not manifest itself.

The following are quotes from these real cases, which are presented and described in a very good book "**Encyclopedia of the unexplained**", p. 99-110.

"*Encyclopedia of the unexplained*", Peter Hough and Jenny Randlers, publisher: Sinisukk, Tallinn 1998, ISBN: 9985730380. (2)

Only the most well-known and researched cases are presented in this work:

"There are many known cases when people have seen places as they might have been in former times. Ruth Manning Saunders describes one such case in her 1951 book "*The River Dart*". Three girls were on a hunting trip with their father in Hayford, near Buckfastleigh. In the middle of the evening, the girls limped away on their own and got lost in the falling darkness. The author writes: "To their joy, they saw a light ahead and reached a house by the side of the road. A reddish glimmer of fire seemed to be coming from the uncovered windows, which kindly warmed the night. The three girls looked in the window and saw an old man and an old woman sitting hunched by the fire. Suddenly, lo and behold, the fire, the old man, and nothing, and the whole house were gone, and in their place night descended like a blackening sack."

"There are many known cases where people have seen places as they might have been in the past." This

means that cases of time displacement are actually quite common on a global scale, but only a very small proportion of them reach the public. The known cases are only a very small part of the total cases in the world. This is probably because people are mostly afraid to talk about their experiences to others, fearing for their social reputation and sanity. Time travel is generally considered impossible, and there is no way to empirically prove what you have experienced to others. Therefore, a large part of the cases remain unreported in any form in the world.

"Three girls looked in the window and saw an old man and an old woman sitting hunched by the fire. Suddenly, lo and behold, the fire, the old man and the old woman and the whole house were gone, and in their place night descended like a blackening sack." It follows from this that time travel to the past or the future is essentially time teleportation, and it is in good agreement with the physical theory of time travel. Teleportation in time is manifested in the fact that one travels in time to the past in a moment (i.e. in 0 seconds), and therefore the world surrounding the time traveler changes in a single moment to what the world was like at the moment in time to which one "moves" in time.

"Evidently, American biologist and paranormal investigator Ivan T. Sanderson has also seen buildings from another era. He was driving with his wife and an assistant somewhere in Haiti when their car got stuck in a ditch. They abandoned the vehicle and continued on foot until fatigue overtook them. In his book, “More Things”, Sanderson wrote: "Suddenly looking up from the dusty ground, I saw in the bright moonlight on either side of the road three-story houses of various sizes and shapes, casting just such shadows as they were supposed to cast." The scene continued, the ground became muddier, and it was paved with cobblestones. The woman stretched her hand forward and described in shock what the man saw. Sanderson was convinced that he could see the houses of Paris in front of him. After staring at them for a while, both of them felt very dizzy. Sanderson shouted to an assistant who had reached a little way ahead of them. The man came back and the biologist asked him for a cigarette. As soon as the flame of the assistant's lighter went out, so did the vision of fifteenth-century France. What's more, the assistant didn't see it and didn't notice anything else out of the ordinary."

"Evidently, American biologist and paranormal investigator Ivan T. Sanderson has also seen buildings from another era. He was traveling with his wife and an assistant somewhere in the middle of Haiti when their car got stuck in a ditch." It is noteworthy that time has been traveled by car, by bicycle, by foot, traveled alone or even in a group, outdoors or inside buildings, in different weather conditions. etc. It is indeed remarkable that in different situations and in different environments there has been a displacement in time. In this case, three people have traveled in time at the same time, and all three people have had the same experience. There are also many such cases where a person has traveled through time while being alone. In terms of weather conditions, cases of displacement in time have mostly occurred when there is a thunderstorm coming and there is therefore much more electrical energy in the atmosphere than usual.

“As soon as the flame of the assistant's lighter went out, so did the vision of fifteenth-century France. What's more, the assistant did not see it and did not notice anything else unusual." Again, another fact that points to the nature of teleportation in time. Time is "traveled" in an instant, or teleported, not as we are used to seeing in science fiction movies. The world around the time traveler changes in an instant, not by transitioning (i.e. evolving) from one year to another. All cases of time travel involve teleportation through time, and this common characteristic adds to the plausibility that these cases have actually occurred. The trait of time teleportation is completely consistent with the physics theory of time travel.

"When they had looked at them for a while, both were overcome with severe vertigo." People have indeed very often felt psychological aspects of time shift phenomena - dizziness, depression, changes in the perception of reality, etc. Unfortunately, science cannot yet say what exactly they come from. All that is known for sure is that similar psychological manifestations occur in humans when they are directly exposed to electromagnetic fields. Such circumstances emerge from the researches of experimental physics, for example the researches of Tarmo Koppel. This means that the psychological manifestations of time shift phenomena and the effects of electromagnetic fields on the human body and brain are extremely similar, which suggests a common origin. *"Feelings of depression and other characteristic things related to perception have also appeared in the case of other time shift*

phenomena based on the descriptions." "People who have experienced a time shift often mention the feeling as if two time zones exist at the same time, one of which partially overlaps with the other."

Joan Forman, author of *"The Mask of Time",* also experienced a time shift while sourcing material for the work. He visited Haddon Hall in Derbyshire during a week-long holiday. Standing outside, she saw four children playing on some stairs. The oldest, a girl of about nine, had her back to Joan. Miss Forman described the child as wearing a white Dutch hat, a long greenish-gray dress with a lace collar, and blond hair falling to her shoulders. She heard the children's laughter, although she realized that physically she could not see the children with her own eyes. Suddenly the girl turned her face towards her. Joan Forman had imagined the child to be very beautiful, but in fact he turned out to be quite plain. Shocked, Miss Forman took a step forward, and all the children suddenly disappeared. She entered Haddon Hall and began looking for the portrait of the girl she had met. Finally she noticed it. The child depicted in the painting was younger, but she unmistakably recognized its thick jawline and stubby nose. Joan Forman had apparently met Lady Grace Manners - many years after her death - as a child playing."

"Amazed, Miss Forman took a step forward and all the children suddenly disappeared." This is another manifestation of teleportation in time, and there is no doubt about it. According to the physics theory of time travel, time can be traveled in the dimension of hyperspace, i.e. outside of spacetime. This is made possible by a tunnel in spacetime, or wormhole, which can arise from electromagnetic interaction. The principle is that if a person has teleported in time, then according to the physics theory of time travel, the person has passed through a wormhole, or a tunnel in spacetime. It is not possible to visually observe the tunnel in spacetime, because the time of its existence is extremely small. The tunnel in spacetime (i.e. hyperspace dimension) is traversed in an instant and we understand this physically as teleportation.

"Someone remembered Joan Forman, who had lost sight of these four playing children while moving away. Did he "have" to stop at the exact point that, under certain conditions, the spectacle of the past could begin to unfold before his eyes again?' At a certain point, he saw Lady Grace Manners playing as a child - years after her death." A tunnel in spacetime allows you to travel (i.e. teleport) through time. A tunnel in spacetime is created as a result of electromagnetic interaction, more precisely, changes in the fields of electric charges. This means that if human body is surrounded by a changing field, a trapped surface in spacetime near an electrically charged surface can form. In this case, this trapped surface is shaped like a human body, and the trapped surface in spacetime can be interpreted as the entrance and exit of a tunnel in spacetime. By going through the tunnel in spacetime (which allows you to move in hyperspace, i.e. outside spacetime), you are teleported in time. The occurrence of a variable field near the surface of the human body depends on the ratio of human and environmental influences. *"It seems to require some sort of trigger for the time shift to appear. A sudden flash of light or an unusual amount of electrical energy in the atmosphere seems to fit the role, because they can interact with the human brain under the right conditions."*

In case of any change in the energy field, a "trapped surface in spacetime" also appears for a short time, on which time and space have been transformed or curved to infinity according to the theory of special relativity. For example, if a magnetic field occurs in empty space at the speed of light c, then the temporary "boundary" between the empty space and the energy field can be conceptually interpreted as a two-dimensional "surface" with time and space transformed to infinity, as it "moves" ("propagates") in space at the speed of light c. On the Schwarzschild surface at the center of a black hole, or the "horizon" of a black hole, time and space are also transformed, or warped, to infinity. The Schwarzschild radius r of a black hole determines the size of the Schwarzschild surface S.

"Pensioner Miss Charlotte Warburton, who lived with her husband near Tunbridge, Kent, was taken back in time on Tuesday, June 18, 1968. The married couple had gone to the city to do some shopping, and then each of them went about their business, having agreed to meet later in the same cafe as always. With the usual shopping done, Miss Warburton went to a few more shops, looking for tinned biscuits. That's how he ended up in an unknown small self-service store. There was no cake there, but a senior citizen looking around the shop noticed a passage in the left wall, and curiosity forced him to take a closer look. The passage led to a large rectangular room with mahogany panels, the

design of which was sharply different from the modern chrome and plastic decorations of the store. Miss Warburton described it: “I did not notice any windows, but the room was lighted by a number of small electric bulbs with ice-glass domes. I saw two couples wearing mid-century clothing, and one woman's outfit stood out to me. She was wearing a beige felt hat, which had a tuft of dark fur attached to the left brim, which was set half askew on her head. The woman's coat was also beige, and a couple of decades ago it might have been considered very fashionable." Everyone was drinking coffee and chatting with each other, which didn't seem like anything out of the ordinary considering it was mid-morning. However, the pensioner found it strange that he had never heard of this cafe before, and later remembered that he had not smelled the aroma of coffee at all. Having met her husband, Miss Warburton told him of her discovery, and they decided to visit this new cafe the following Tuesday. A week later, shopping was done as usual; after that they went to that small shop and walked towards where the cafe door had been. However, now there was a cold food counter by the wall in the same place. Mr. Warburton was adamant that his wife was not mistaken, and went with her to two more similar shops, but there too he could not find what he was looking for. Miss Warburton saw what she had experienced so clearly that she began to feel as if her perception had drifted back to a time when the mahogany-paneled coffee-house still existed. Charlotte Warburton decided to find out what happened herself. He got in touch with a woman there who was interested in psychic phenomena and asked if she remembered any such coffee shop. She was told that a few years ago there had been a cinema next to the shop, with the Tunbridge Wells Constitutional Club to the left. She remembered that when she went to the club during World War II, she saw small snack tables and mahogany paneled walls. Still not satisfied, Miss Warburton searched for the said club in its new location and also found the club's chief financial officer, who had held the position since 1919. He stated that the old club rooms were accessed from the street side door next to the store, and then you had to go up the stairs. There had also been a dining room upstairs, the furnishings of which exactly matched Miss Warburton's description."

"Mrs. Warburton also noticed several men wearing blazers and the adjacent glass booth where the cashier was sitting. Everyone was drinking coffee and talking to each other, which seemed nothing out of the ordinary, considering it was mid-morning.” “Miss Warburton saw what she had experienced so clearly that she began to feel as if her perception had drifted back to the time when the mahogany-paneled coffee-house still existed." "Time shifts are not imaginary phenomena. It often turns out that the information received through them fully corresponds to reality."

“The most famous case of time displacement occurred with two English tourists who visited the Palace of Versailles, the residence of the French royal family in the seventeenth and eighteenth centuries. The parties involved - as in the case of Dieppe half a century later - were two women: Miss Anne Moberley and Miss Eleanor Jourdain. These middle-aged ladies could be considered educated people. Miss Moberley was an headmistress of Oxford St. Hugh College and Miss Jourdain was headmistress of Watford School for Girls. Both were interested in history and not inclined to fantasize. On a warm afternoon on August 10, 1901, these single ladies left the Galeries des Glaces and decided to walk to the Petit Trianon. They were not quite sure of the way, and turned into a quiet street, where Miss Moberley saw a woman flapping some cloth out of a window. She later learned that her friend hadn't seen it, and the building didn't even exist. They crossed the path where they noticed two men wearing long grey-green robes and a triangular hat. They seemed to be working there because a wheelbarrow and shovel were within reach. The men guided them in the right direction and the ladies continued their walk. Then Miss Jourdain noticed a woman and a teenage girl standing in the doorway, both wearing vintage dresses. From that moment on, the landscape seemed to transform nightmarishly; it became flat, almost two-dimensional, and both women sensed a wave of depression towering over them. At that moment they approached a round garden house where a man was sitting. There seemed to be something ominous and repulsive about him, and they could not pass him. Suddenly footsteps were heard from behind, but the women looked around and saw no one. Miss Moberley now noticed another person standing near them, a man in a coat and hat, who smiled warmly at them. He led them to the house. On the way, Miss Moberley noticed a woman drawing on the lawn. She wore a dress with a deep cut and a white hat with a wide brim. The woman turned around and looked after the passing strangers. Miss Moberley only later learned that her friend had never seen a person who bore a striking resemblance to Marie-Antoinette, Queen of France in the eighteenth

century. As they went on, the women noticed a young man "who looked like a lackey" coming out of the house. He closed the door behind him and led them towards the entrance of the Petit Trianon. The atmosphere of depression and unreality that possessed the women began to dissipate in the building."

"Had they gone back in time and seen buildings and people from before the French Revolution, or was there a much more prosaic explanation? Their book "An Adventure" was published ten years later. Since then, the described case has been investigated very thoroughly. Critics found inconsistencies in the descriptions of the women. Later it became clear that an aristocrat named Comte Robert de Montesquiou-Fezenzac, who was fond of the eighteenth century, used to dress up in the costumes of that era and walk around the gardens of Versailles with some friends. Someone knew to add that in her childhood she knew a woman who dressed herself as Marie-Antoinette in summer and used to sit in the garden of the Petit Trianon. Had the two English women just met actors wearing period clothing? Considering this explanation to be correct, however, other peculiar aspects of the phenomenon must be dismissed. If they were indeed actors, how could it happen that in many cases only one witness saw them? The ladies described buildings and paths that no longer existed in the twentieth century. Indeed, if they had followed the indicated path, they would have had to walk through several brick walls. Feelings of depression and other characteristic things related to perception have also appeared in other time shift phenomena based on the descriptions."

"From that moment the landscape seemed to transform nightmarishly; it became flat, almost two-dimensional, and both women perceived a wave of depression gushing from them." "The atmosphere of depression and unreality that possessed the women began to dissipate in the building." "The feeling of depression and other characteristic aspects related to perception have also appeared in other time shift phenomena, based on the descriptions."

"Near the Petit Trianon, Marie Antoinette's small Versailles palace, our contemporaries sometimes find themselves at a party from 200 years ago, where people in 18th-century court clothes walk in groups and chat, and the wind carries minuet tunes in the distance. A young woman paints something on a canvas mounted on an easel. Two ladies are looking at her, the younger of whom is a light-headed woman in a silver dress and a beauty wearing a straw hat, holding a small dog in her arms. These people pay no attention to guests from the future. Two English women, Miss Moberly and Miss Jordan, were the first to attend this party on August 10, 1901. For a while, the ladies did not tell anyone about the matter, and only in 1911 did they decide to make the incident public. Toda's visit to the past had been accompanied by a peculiar feeling of unreality and heavy fatigue, but the girls, who were completely normal mentally, confirmed that it was not a mirage or a vision. They had indeed been to the park of Versailles, asked twice for directions to the Petit Trianon, and received a polite answer from cavaliers who appeared to be actors in a historical theater performance. At irregular intervals, sometimes quite often, once after many years, this scene has revealed itself to individual eyewitnesses. Their narratives have always been the same. Everything takes place within a few minutes, then the music fades, the voices die down, and the alley takes on a modern look again. The Versaille party has been seen by people of different nationalities, social positions and ages, who are united by only one thing: they went to Versaille for the first time and had never heard anything about this "show of the past" before." (Paradoks 10 - 1999, TV 1999) (3)

"Another vivid time shift phenomenon - and again English tourists arriving in France were involved - took place in October 1979. Len and Cynthia Gisby and their friends Geoff and Pauline Simpson planned to travel to Spain from their home in Kent. After crossing the English Channel, they drove to Montélimar. When it got dark, they stopped in front of a hotel called "Ibis", but in the reception room, a man in a plum-colored uniform informed them that there were no rooms available, but if they continued along a side road, they would reach a small inn, where they would surely find shelter. They noticed the end of the road and drove to find the hotel, although the road was very dilapidated. The women noticed the advertising posters of the circus with a surprisingly old-fashioned design on the side of the road. Finally they reached an inn, where they had to stop on the side of the road because there was no parking lot. Next to it stood another building that resembled a police station. Although the owner of the inn could not speak English, and they spoke French with difficulty, they managed to make themselves understood and got free rooms. It was ten o'clock in the evening. The two-story

ranch-style building was very old-fashioned inside. The windows in the bedroom had no glass, only shutters, the bed sheets were made of thick calico, and instead of pillows, headrests lay on the bed. The bathroom furnishings would be more suited to Queen Victoria's time. The soap was stuck on the rod. After emptying their suitcases, they went downstairs, ate a hearty dinner - the dish was heated on metal plates - and washed it down with beer. Several scantily clad men sat at the bar. After a good night's sleep, the four of us went downstairs for breakfast. Just as they were eating, a lady walked in with a dog under her arm. The lady was wearing button boots and a long prom dress. Then two gendarmes entered, wearing a high-brimmed uniform cap, a dark blue cape, and ankle boots. By this time, the Gisbys and the Simpsons were already convinced that they were staying in a working museum built for the entertainment of tourists. They agreed to photograph it. Each man photographed a woman leaning out of a bedroom window. It was necessary to continue the journey. First Len and then Geoff tried to find out from the gendarmes which way to get to the main road, but despite their best efforts, they didn't seem to understand a word of what they were saying. When Spain finally happened to be mentioned, they were led down the old Avignon road. While paying the bill, they were again surprised. The total came to less than £2. Len's misunderstanding only caused smirks from the host and the gendarmes. Finally they left. Instead of turning on the road to Avignon, they studied the map and easily reached the main road. They traveled to Spain, where they stayed for two weeks. It was only natural that on the way back we wanted to stay again in that old-fashioned, quaint and cheap inn near Montélimar. They found the end of the road and even saw circus advertisements, but there was no inn. Looking around the neighborhood turned out to be completely useless. Stunned, they drove to the "Ibis" and wanted to talk to the man wearing the plum-haired uniform. They were told that there is no such person working at Ibis. No one from the hotel staff could answer inquiries about where the inn we were looking for could be located. In England, they had films of their holiday trip released. Friends were surprised that there were no photos taken in the inn among the photos they received. Surprise turned to disbelief when, upon examination of the numbered negatives, it turned out that the frames sought did not exist at all. One camera had left a mechanical mark, as if a failed attempt had been made to advance the film, but that was all. There was no trace of the mentioned footage on the film in either camera. In 1983, both married couples returned to France in order to thoroughly clarify what had happened with the help of the French Tourist Board. Philippe Despeysses, a representative of tourism organizations, had found a place that somewhat resembled the location of the mysterious inn. The Gisbys and the Simpsons were taken there. Although they had to admit that everything was very much like what they had seen before, a conversation with the owners convinced them that it was not the same place they had stayed in 1979. Jenny Randles tried to find out from both couples what they had experienced. He found other questions besides the missing film footage. “If there really was a time shift to the past, why didn't anyone at the inn wonder your car or your clothes?” he asked. “Why did the master accept payment in coins that could not have had any value in the olden days?” The Simpsons answered with sincerity and conviction, “You'll have to find the answer yourself. We only know what happened to us."

In the latter case, it is quite extraordinary that a documentary was eventually made based on this case and therefore it is found in old documentary series (for example "*Strange But True?*") that were wound in the nineties of the 20th century (4):

https://drive.google.com/file/d/13Jtl4N7kpZCVvgl47hcsR_IZXVd1AP5T/view?usp=sharing

https://www.youtube.com/watch?v=8aB2uuiuK0g

"The described cases can be interpreted in many ways based on the time shift theory. Did the people who experienced it slip back in time and see events that had yet to happen, or did they perceive a visual recording that randomly turned on before their eyes? Parapsychologists created the rock recording theory to explain a certain type of clairvoyance—instances in which people see figures, buildings, and landscapes from the past and hear the sounds of those times. For example, Joan Forman, who had lost sight of these four playing children while moving away. Did she have to stop at a certain point so that, under certain conditions, the performance of the past could begin to play out again before his eyes? The theory of stone records is based on the assumption that certain events,

especially those that generate a certain amount of emotional energy, are recorded in some way in the environment, for example, in the stone walls of buildings, in the soil or in the atmosphere. This can be true in cases where ghosts are seen years later in the same place. Only under certain conditions, such as the concentration of electromagnetic energy in the atmosphere, or the arrival of a person with special psychic powers, something seems to press a button, and what was recorded becomes perceptible again. This seems to negate the idea that a person with hypersensitive perception could travel back in time, but I guess this theory can only be applied to cases where the wanderings seem to go unnoticed by observers. And what is experienced when the observer and the observed come into contact with each other? In this case, we are not dealing with a record of past events, but perhaps with the past itself."

“Our psychic selves operate only in three-dimensional space, but consciousness moves back and forth in time. People who have experienced jet lag often report feeling as if two time zones exist at the same time, one partially overlapping the other. The absence of natural sounds accompanying the time shift, such as birdsong or traffic noise, has also been observed by people who have experienced other phenomena - for example, a close encounter with a UFO. A time shift appears to require some sort of trigger. A sudden flash of light or an unusual amount of electrical energy in the atmosphere seems to fit the role, as they can interact with the human brain under the right conditions. Time shifts are not imaginary phenomena. It often turns out that the information received through them fully corresponds to reality. A branch of physics known as quantum mechanics can help us understand the nature of time correctly. In his book "Man and Time", J.B. Priestly divided time into three components: the first is the present time, the second is the time of the possible future, and the third is the time of the imagination.

Based on the time shift theory, the described cases can only be interpreted as the people who experienced it slipping back through time and seeing events that had yet to happen. For example, Joan Forman had lost sight of these four playing children while moving away. Did she have to stop at a certain point so that, under certain conditions, the performance of the past could begin to play out again before his eyes? Only under certain conditions, such as the concentration of electromagnetic energy in the atmosphere or the arrival of a person with special psychic powers, something seems to click, and the past becomes perceptible again. This clearly points to the fact that a person could still travel back in time. Since the observer and the observed also make contact with each other, in this case we are not dealing with hallucinations, but rather with the past itself.

Only a tunnel in spacetime would allow moving (i.e. teleporting) in time. A tunnel in spacetime is created as a result of electromagnetic interaction, more precisely changes in the fields of electric charges. In turn, it follows from such a theory that if, for example, the body of an electrically charged person were to be surrounded by a changing field, then a trapped surface in spacetime could be created near the electrically charged surface. In this case, this trapped surface is shaped like a human body, and the trapped surface in spacetime can be interpreted as the entrance and exit of a tunnel in spacetime. By going through the tunnel in spacetime (which allows you to move in hyperspace, i.e. outside spacetime), you are teleported in time. The occurrence of a variable field near the surface of an electrically charged human body depends on the ratio of human and environmental influences.

In the event of a change in the energy field, a "trapped surface in spacetime" also appears for a short time, on which time and space have been transformed, i.e., curved to infinity according to the theory of special relativity. For example, if a magnetic field is created in empty space at the speed of light c, then the temporary "boundary" between the empty space and the energy field can be conceptually interpreted as a two-dimensional "surface" with time and space transformed to infinity, as it "moves" ("propagates") in space at the speed of light c. On the Schwarzschild surface at the center of a black hole, or the "horizon" of a black hole, time and space are also transformed, or warped, to infinity. The Schwarzschild radius R of a black hole determines the size of the Schwarzschild surface S.

The physical body receives an electrical charge in two different ways. This means that electric charges move through space for two different reasons. For example, an electrostatic charge is created on the body by friction, i.e. electric charges move in space under the influence of frictional force. Another possibility is that electric charges move only under the influence of an electric field. An example of this is the electric current in a wire or the charging of a capacitor (accumulator), in which the electric charges move

under the influence of the pulling and pushing forces of an electric field, and no longer due to the force of friction. This means that the movement of electric charges in space (and consequently also the electric charges of bodies) is caused by the manifestations of frictional forces or under the influence of electric forces (i.e. the pulling and pushing forces of an electric field). There are no other options.

In case of electrostatic charge, the charges move under the influence of frictional force, but in the case of "electrodynamic charge", the charges move under the influence of attractive and repulsive forces, or electric fields. This means that the physical body receives an electric charge through friction or under the influence of an electric field, i.e. through pulling and repelling forces. For example, an accumulator used in electrical engineering, or simply a battery, can be charged by an electric current, in which the charges move under the influence of pulling and pushing forces. Electrostatic charge is created on the body by friction.

It must also be noted that the mechanical frictional force is actually electrical in nature. This means that the frictional force is also an electrical force in its deep nature. Nevertheless, in this case, for the sake of simplicity, we still broadly classify the causes of the movement of electric charges into two, as we did before. For example, in an Wimshurst machine, electric charges move due to the frictional force caused by the rotating motion of the discs of the Wimshurst machine. But at the same time, the electric current in the wire is already caused by the effect of the pulling and pushing forces of the electric field, i.e. electrical forces. Figure of an Wimshurst machine (5):

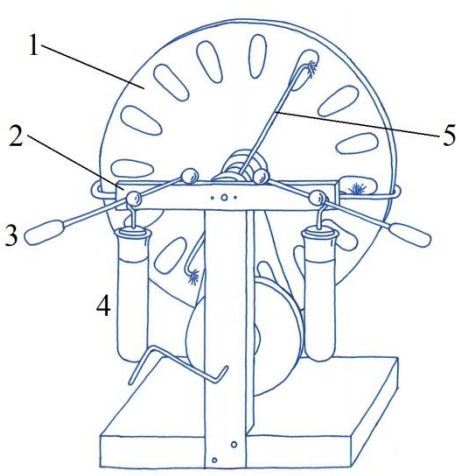

1 *Transparent acrylic discs with tin-foil segments*

2 *Insulating bar*

3 *Electrode rods*

4 *Leyden jars*

5 *Diagonal rod with metal brushes*

Electrostatics is the study of electric charges that are stationary relative to each other. Electrokinematics studies the various patterns of motion of electric charges in time and space. But electrodynamics tries to find out what causes charges to move in space.

A person can receive an electrostatic charge naturally or may have to use different technologies (such as a Van de Graaff generator or Wimshurst machine). In this case, we are investigating the generation of electrostatic charge on human body obtained in an organic (natural) way and its effect on human health. Figure of a Van de Graaff generator (6):

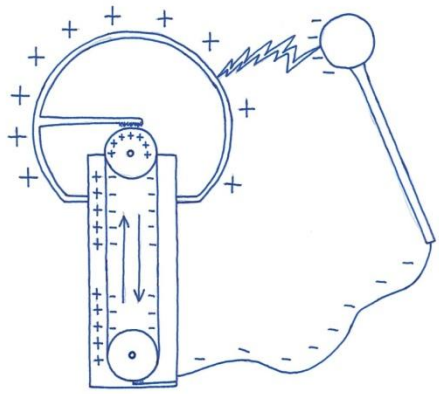

The electric charges generated on human body depend on several factors. For example, there are materials that promote the creation of an electrostatic charge, but also its loss (i.e. which conduct or dissipate the charge). Electrical devices can directly convert electrical energy into electrostatic charge. However, this can be transferred to human body. In most cases, people are connected to the earth (i.e. grounded).

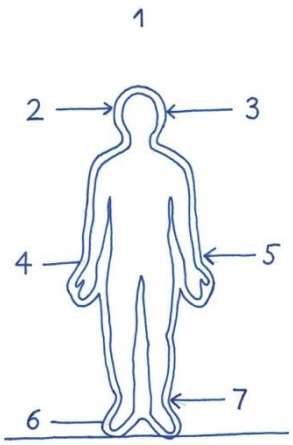

Figure: Charges can be created on human body.

1. Factors influencing the creation of an electric charge in human body

2. ELECTRONICS: collecting charge
no charge
3. WALL MATERIAL: collecting charge
dissipating charge
4. CLOTHING: synthetic
free of charge
5. FURNITURE: collecting charge
dissipating charge
6. FOOTWEAR: isolating sole
conducting sole
7. FLOOR COVERING: collecting charge
dissipating charge

The floor covering may have an electrostatic charge that can be transferred to a person. However, an electrostatic field can also occur on the floor covering when a person walks on it (this means friction). Even in this case, this electrostatic charge is transferred to the human body. This is evidenced by electric sparks that appear, for example, when people come into contact with each other or when they touch metal surfaces. For example, synthetic floor coverings can have an electrostatic field (and therefore a charge), but not all synthetic carpets. For example, if a person walks on a lacquered floor, an electrostatic field can also be generated. And even more so when legs are dragged.

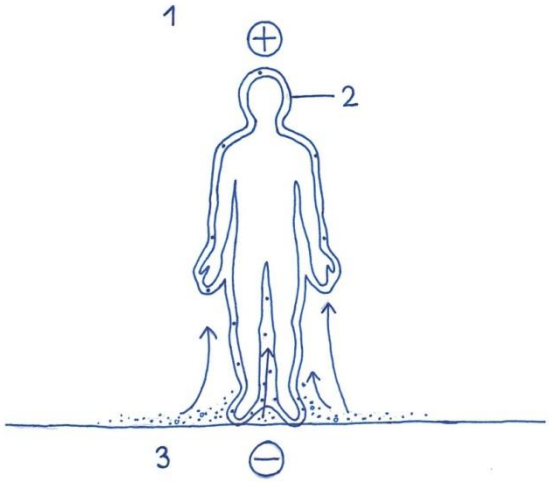

Figure: Electrifying human body.

1. A human collects a charge from the material of the floor covering
2. Electrostatic field
3. Floor covering with a strong electrostatic charge

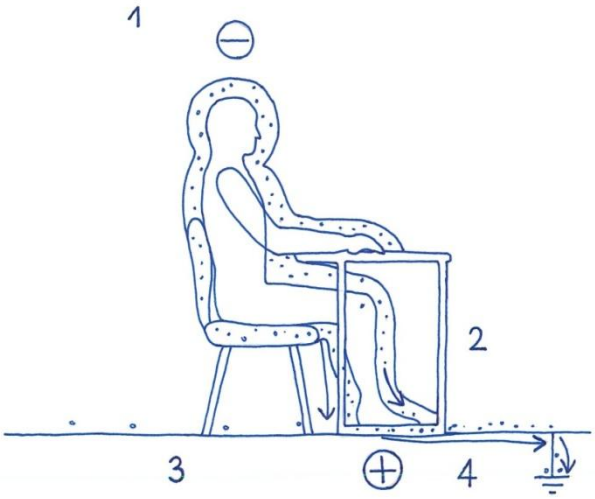

Figure: Collecting of grounding a charge takes place.

1. A person carrying an electrostatic charge
2. An electrostatic charge is unloaded from the body
3. A floor covering dissipating or grounding

electrostatic charge

4. Connection to earth

There are also floor coverings called antistatic floor coverings. In this case, it conducts electrostatic charge accumulated on a human body into the ground or disperses it into the floor covering. But only the dissipative floor covering collects the charge. But with a sufficiently large accumulated charge, the floor covering will begin to send the accumulated charge back to people. All electrostatic products do not discharge humans. (7)

Real cases of time travel can be explained by the previously mentioned theories, in which a person would travel in time if the electric field of their charge changed throughout the space around them. These cases of time travel can be explained very precisely with the conclusions derived from the physics theory of time travel (1), which has been written down and presented in the entire preceding 1000+ pages of material. From the physics theory of time travel (1), we can calculate how far in time it is possible to travel and how strong electric charge is needed for this, if the trapped surface in spacetime trapping surface had the shape and size of human body. These calculations provide fairly objective evidence of the validity of the given time travel theory, at least its theoretical evidence/plausibility.

The calculations concerning a trapped surface in spacetime with the shape and size of a person would be approximately valid even if we considered the same quantities for a purely spherical trapped surface in spacetime. Therefore, 4π remains in the equations. Figure:

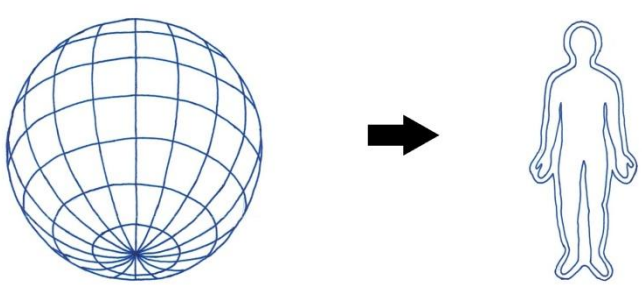

For example, if the time period t of the existence of a trapped surface in spacetime S in the equation derived above:

$$t = \frac{1}{c}\sqrt{\frac{S}{4\pi}}$$

the value of the area S would be equal to the area of a human body:

$$S = 1{,}9\ m^2$$

then we would get the period of existence of a trapped surface in spacetime S as follows:

$$t = 1{,}29 * 10^{-9}\ sec$$

which coincides very well with the period of an electromagnetic wave if the wavelength were 0.38893 m. Since the physical data of the people described in various cases are not known, for the sake of simplicity we use the surface area S (1,9 m^2) of a male person's body in these calculations, in which case the person is 20 years old, 180 cm tall and weighs 70 kg. Let's analyze the magnitude of the results of the calculations.
(Source: http://rlpa.ttu.ee/scratch/h2/ideaal.pdf) (8)

However, for the square of the resulting time period:

$$t^2 = 1{,}6641 * 10^{-18}\ sec^2$$

or

$$\frac{t`}{y} = t = t^2 = 1{,}6641 * 10^{-18}\ sec$$

we can teleport into the past for t` = 208,012,500 seconds or 6.596 years (leap years are not taken into account). We got 6.5 years as a result, which is a much smaller number of years compared to the above-described time travel cases, in which, for example, 26, 50, 150 and even up to 300-500 years have been traveled into the past. Here are some of the most important examples:

"…As soon as the flame of the assistant's lighter went out, so did the vision of fifteenth-century France. …"

"…Joan Forman had apparently met Lady Grace Manners - many years after her death - as a child playing. …"

"…Pensioner Miss Charlotte Warburton, who lived with her husband near Tunbridge, Kent, was taken back in time on Tuesday, June 18, 1968. …I saw two couples wearing mid-century clothing, and one

woman's outfit stood out in my mind. She was wearing a beige felt hat, which had a tuft of dark fur attached to the left brim, which was set half askew on her head. The woman's coat was also beige, and twenty years ago it could have been considered very fashionable. …She was told that a few years ago there had been a cinema next to the shop, and to the left was the Tunbridge Wells Constitutional Club. She remembered that when she went to the club during World War II, she saw small snack tables and mahogany paneled walls. Still not satisfied, Miss Warburton searched for the said club in its new location and also found the club's chief financial officer, who had held the position since 1919. He stated that the old club rooms were accessed from the street side door next to the store, and then you had to go up the stairs. There had also been a dining room upstairs, the furnishings of which exactly matched Miss Warburton's description. …"

"…The most famous case of time displacement occurred with two English tourists who visited the Palace of Versailles, the residence of the French royal family in the seventeenth and eighteenth centuries. ...1901. on the warm afternoon of August 10, these single ladies left the Galeries des Glaces and decided to walk to the Petit Trianon. …Miss Moberley learned only later that her friend had never seen a person who bore a striking resemblance to Marie-Antoinette, Queen of France in the eighteenth century. …"

"...near Petit Trianon, Marie Antoinette's small Versailles palace, our contemporaries sometimes find themselves at a party from 200 years ago, where people in 18th century court clothes walk in groups and chat, and the wind carries minuet tunes in the distance. A young woman paints something on a canvas mounted on an easel. ...The first to come to this party were two English women, Miss Moberly and Miss Jordan on August 10, 1901. For a while, the ladies did not tell anyone about the matter, and only in 1911 did they decide to make the incident public. …At irregular intervals, sometimes quite often, once after many years, this scene has revealed itself to individual eyewitnesses. Their narratives have always been the same. Everything takes place within a few minutes, then the music fades, the voices die down, and the alley takes on a modern look again. The Versailles party has seen people of different nationalities, social positions and ages, united by only one thing: they went to Versailles for the first time and had never heard anything about this "show of the past" before. …"

"...Another vivid time shift phenomenon - and again English tourists arriving in France were involved - took place in October 1979. Len and Cynthia Gisby and their friends Geoff and Pauline Simpson planned to travel to Spain from their home in Kent. …Bathroom furnishings would be more suited to Queen Victoria's time. …"

Seemingly, it's just that we calculated a value of 1.9 m^2 with surface area, which is basically the "minimum" surface area value for a normal adult human body. Since a person also wears different clothes and as a result, the surface of human body becomes much more "folded", so the surface area S of a person can actually reach up to 30 m^2. If, as a result, the area of the trapped surface in spacetime is, for example, 28.26 m^2, then a person can travel back in time for about 100 years, which is obviously within the limits of the magnitude of the time travel cases described above.

For example, if the value of the area S of the trapped surface in spacetime was 28.26 m^2, then the period of its existence would be $5 * 10^{-9}$ seconds. However, if its area were 1.9 m^2, then the period of its existence would be $1{,}29 * 10^{-9}$ seconds. These two obtained values of the period of existence are not very different from each other in terms of magnitude.

Since the human small intestine is 7 m long and 2.5 cm wide, it could therefore be assumed that its surface area S would be about 0.6 m^2. However, in fact, it is not so. Since the surface of the small intestine is also quite "folded", as a result, its surface area S reaches to as much as 250 m^2.

Since the "real" period of existence of a trapped surface in spacetime is:

$$t = 1{,}29 * 10^{-9}\ sec$$

and its radius r would be 0.38893 m in case of a spherical trapped surface in spacetime, we can, based on the strength of an electric field E_T according to the equation:

$$E_T = k\frac{q}{r^2}$$

calculate the approximate electric charge q for a human body as well:

$$\frac{E_T r^2}{k} = q = 5{,}042 * 10^{-5}\ C$$

The obtained result is the largest possible electric charge for a sphere with a radius of 0.38893 meters, since the "electrical breakdown" of air as vacuum is at the field strength:

$$E_T = 3 * 10^6 \frac{V}{m}$$

Such electric charges, in which electric breakdowns would occur in the air, would already be felt by a person (for example, a person's hair would stand on end). However, people usually do not perceive charges that are about 10-100 times smaller than this, and in cases of time travel, people themselves have not felt electric charges on their bodies. Therefore, the magnitude of the electric charge q can actually be ten times smaller, or:

$$q = 5{,}042 * 10^{-6}\ C$$

For the same area, however, the charge densities can vary quite a lot.

Since, according to the cases described above, time travel has mostly taken place to the past, and therefore, people must have received a negative electric charge. The E-vector of the field is directed towards the charge in case of a negative charge, and therefore in hyperspace it matches the direction into the past, because in the past the volume of the Universe was smaller due to constant expansion. Therefore, time travel mostly took place to the past.

It is also worth noting here that time travel has mostly occurred to the past, but far less often to the future, and teleportation in space has hardly occurred at all.

United States Patent and Trademark Office (USPTO)

The invention, which allows creating a human-sized annular tunnel in space-time, has been attempted to be patented in the United States Patent and Trademark Office (USPTO, website: https://www.uspto.gov). The corresponding patent applications by Marek-Lars Kruusen have been filed in 2023. Patent application number is: 18/339,426; and title of invention: „*Method and equipment for creating a tunnel in spacetime or wormhole*“.

The invention belonging to the field of engineering industry allows artificially creating a loop-shaped tunnel in spacetime, which, according to physics theories, allows a person to teleport in time and space. The main purpose of the machine is to create an electromagnetic field around the machine that changes exactly at the speed of light c. According to Albert Einstein's theory of relativity and Marek-Lars Kruusen's physics theory of time travel, an electromagnetic field changing at the speed of light c should create a short-term closed trapped surface in spacetime, which can also be interpreted as a tunnel in spacetime.

However, only the engineering-technical part is presented in the patent application, which should convincingly demonstrate the creation of a tunnel in spacetime, and that's it. According to the Patent Act, only engineering and technical solutions are patentable, not physical theories. Therefore, the theoretical physics part of how a tunnel in spacetime causes a person to teleport in time and space remains unreported in the patent application. This is already a theoretical part, which is not a patentable object according to the patent law.

Physics theories that would show and describe how, for example, a tunnel in spacetime makes a person or an entire machine teleport in time and space, are presented in this publication (1).

Methods

This work sets out a science of physics that would enable a person to move in real time into the past and into the future. Developing this specific science and technology will create new opportunities to explore human history and also to move in space. The overall method of study of all work is purely theoretical physics. For example, the hypothesis that is largely erected in this work is derived in theory. But at the same time, all these hypotheses are entirely in line with the generally accepted physics theories that exist.

Data availability statement: data sharing not applicable to this content as no datasets were generated or analysed during the current study.

Author's declaration

The author have declared him have no conflict of interest with regard to this content and ethics committee/IRB approval is not relevant to this content.

About the company

I am a self-employed entrepreneur working on developing technology and science in the field of wormholes. The official data of the company can be seen on the websites:

https://ariregister.rik.ee/eng/company/16587177/Marek-Lars-Kruusen

https://tehnoloogiasait.info/company/

Area of activity: scientific research and development, research and experimental development on natural sciences and engineering, other research and experimental development on natural sciences and engineering.

Translation

The entire publication has been translated from Estonian to English. The translation was done using the Estonian translation agency „Filoloog OÜ“ with registration number 11703874. Website:

https://www.filoloog.ee/en/

References

1. Marek-Lars Kruusen, „*Ajas rändamine ja selle*

tehnoloogilised alused“ (in english: „*Time travel and its technological foundations*“), Estonian National Library: https://www.digar.ee/arhiiv/en/nlib-digar:667381. Zenodo (CERN): https://doi.org/10.5281/zenodo.8392591 https://doi.org/10.5281/zenodo.8308191

2. “*Encyclopedia of the unexplained*”, Peter Hough and Jenny Randlers, publisher: Sinisukk, Tallinn 1998, Estonia, ISBN: 9985730380.
3. Magazine „*Paradoks*“, no. 10, 1999, Estonia, editor: Jaanus Aua, publishing house: Sünnimaa.
4. Website: https://www.youtube.com/watch?v=8aB2uuiuK0g, (ITV Central, „*Strange But True?*“ episode and continuity, 15th September 1995). On the network drive, these files are as follows: “Strange but true.mp4“.
5. Website: https://www.3bscientific.com/ee/wimshurst-machine-1002967-u15310-3b-scientific,p_612_1163.html
6. Website: https://commons.wikimedia.org/wiki/File:Van_de_Graaff_generator.svg
7. Website: http://tarmo.koppel.ee/?p=531
8. Website: http://rlpa.ttu.ee/scratch/h2/ideaal.pdf
9. The image on the front cover is taken from pixabay: https://pixabay.com/. Image by Willgard Krause from Pixabay.

Marek-Lars Kruusen's

technology and science

View publication stats