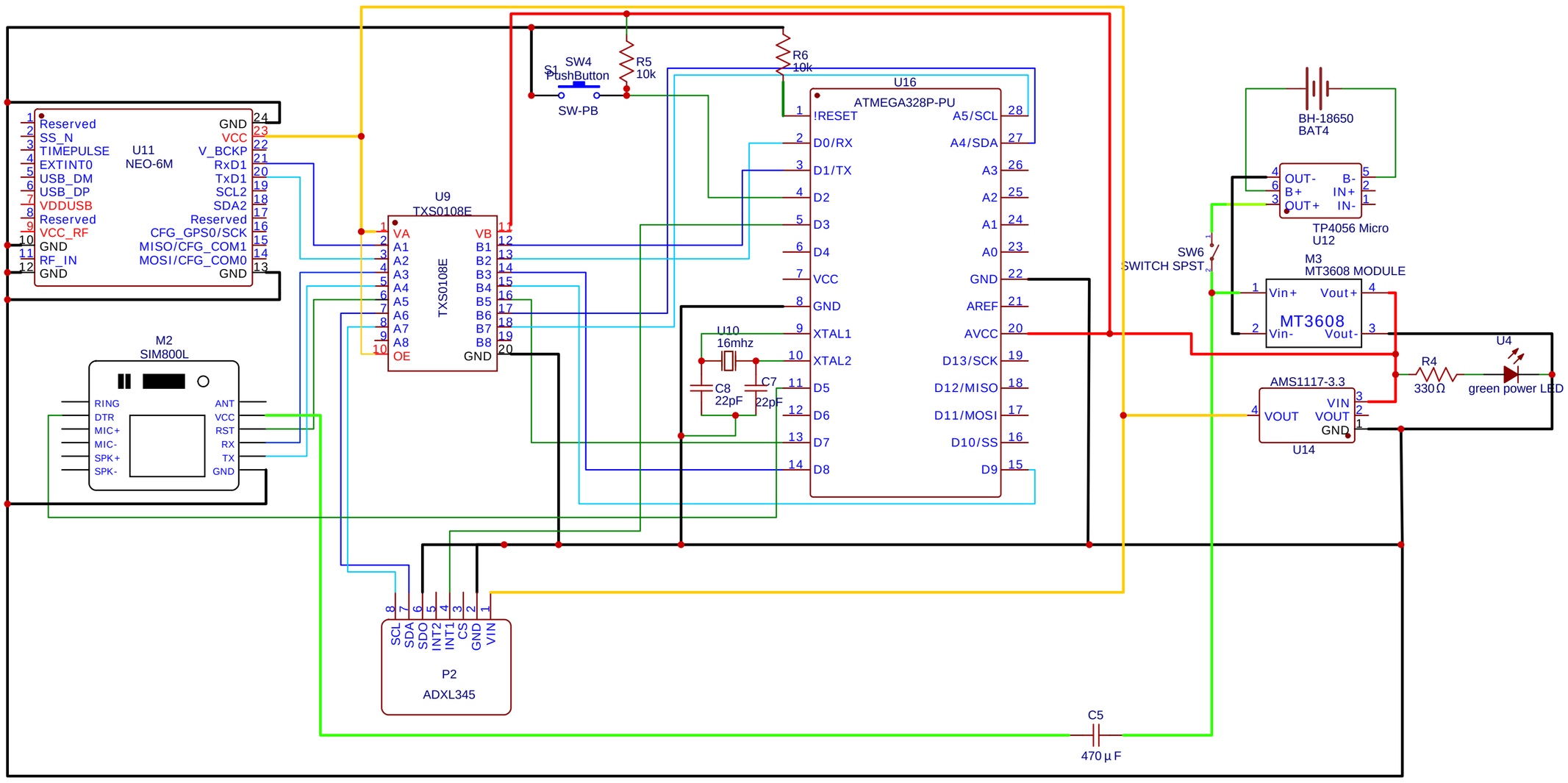

TITLE: Sheet_2_backup		REV: 1.0
EasyEDA	Company: Your Company	Sheet: 2/2
	Date: 2025-03-23 Drawn By:	