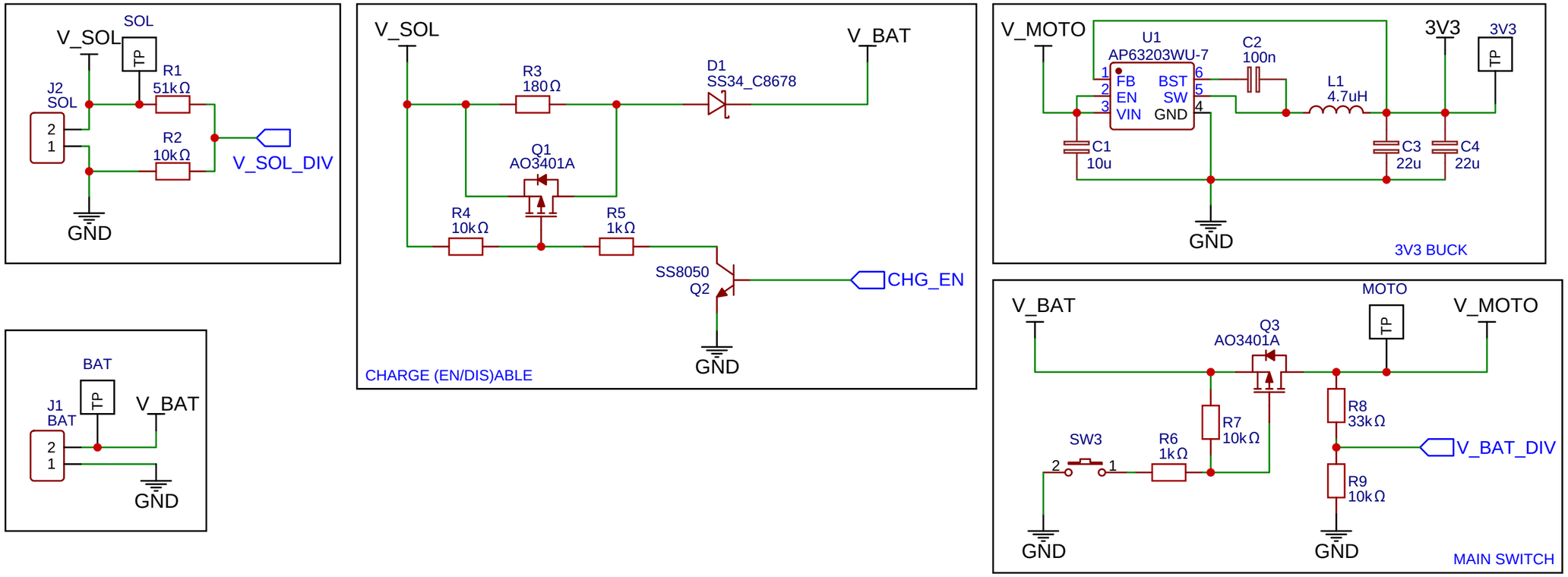

TITLE: Power		REV: 1.1
EasyEDA	Company:	Sheet: 1/3
	Date: 2025-06-20	Drawn By: Daniel Tschinder

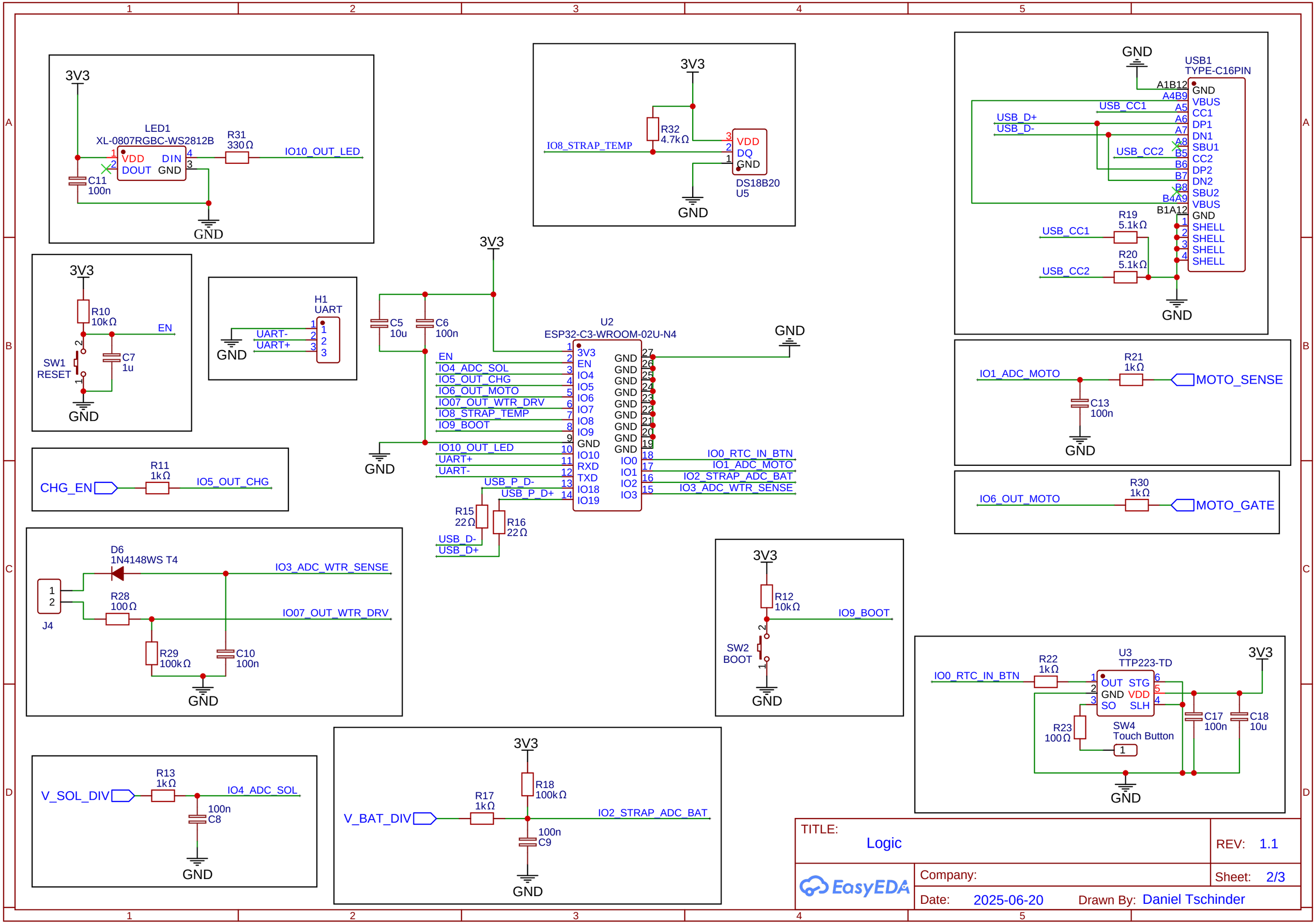
3V3
LED1
XL-0807RGBC-WS2812B
VDD
DOUT
DIN
GND
R31
330Ω
IO10_OUT_LED
C11
100n
GND
3V3
R32
4.7kΩ
IO8_STRAP_TEMP
VDD
DQ
GND
DS18B20
U5
GND
GND
USB1
TYPE-C16PIN
A1B12
A4B9
A5
A6
A7
A8
B5
B6
B7
B8
B4A9
B1A12
GND
VBUS
CC1
DP1
DN1
SBU1
CC2
DP2
DN2
SBU2
VBUS
GND
SHELL
USB_CC1
USB_D+
USB_D-
USB_CC2
R19
5.1kΩ
R20
5.1kΩ
GND
3V3
R10
10kΩ
EN
SW1
RESET
C7
1u
GND
H1
UART
UART-
UART+
GND
3V3
C5
10u
C6
100n
U2
ESP32-C3-WROOM-02U-N4
3V3
EN
IO4
IO5
IO6
IO7
IO8
IO9
GND
IO10
RXD
TXD
IO18
IO19
GND
GND
GND
GND
GND
GND
GND
GND
IO0
IO1
IO2
IO3
EN
IO4_ADC_SOL
IO5_OUT_CHG
IO6_OUT_MOTO
IO07_OUT_WTR_DRV
IO8_STRAP_TEMP
IO9_BOOT
IO10_OUT_LED
UART+
UART-
USB_P_D-
USB_P_D+
IO0_RTC_IN_BTN
IO1_ADC_MOTO
IO2_STRAP_ADC_BAT
IO3_ADC_WTR_SENSE
GND
R15
22Ω
R16
22Ω
USB_D-
USB_D+
GND
IO1_ADC_MOTO
R21
1kΩ
MOTO_SENSE
C13
100n
GND
CHG_EN
R11
1kΩ
IO5_OUT_CHG
IO6_OUT_MOTO
R30
1kΩ
MOTO_GATE
D6
1N4148WS T4
IO3_ADC_WTR_SENSE
J4
R28
100Ω
IO07_OUT_WTR_DRV
R29
100kΩ
C10
100n
GND
3V3
R12
10kΩ
IO9_BOOT
SW2
BOOT
GND
IO0_RTC_IN_BTN
R22
1kΩ
U3
TTP223-TD
OUT
GND
SO
STG
VDD
SLH
3V3
R23
100Ω
SW4
Touch Button
C17
100n
C18
10u
GND
V_SOL_DIV
R13
1kΩ
IO4_ADC_SOL
100n
C8
GND
3V3
R18
100kΩ
V_BAT_DIV
R17
1kΩ
IO2_STRAP_ADC_BAT
100n
C9
GND
TITLE:
Logic
REV: 1.1
Company:
Sheet: 2/3
EasyEDA
Date: 2025-06-20
Drawn By: Daniel Tschinder

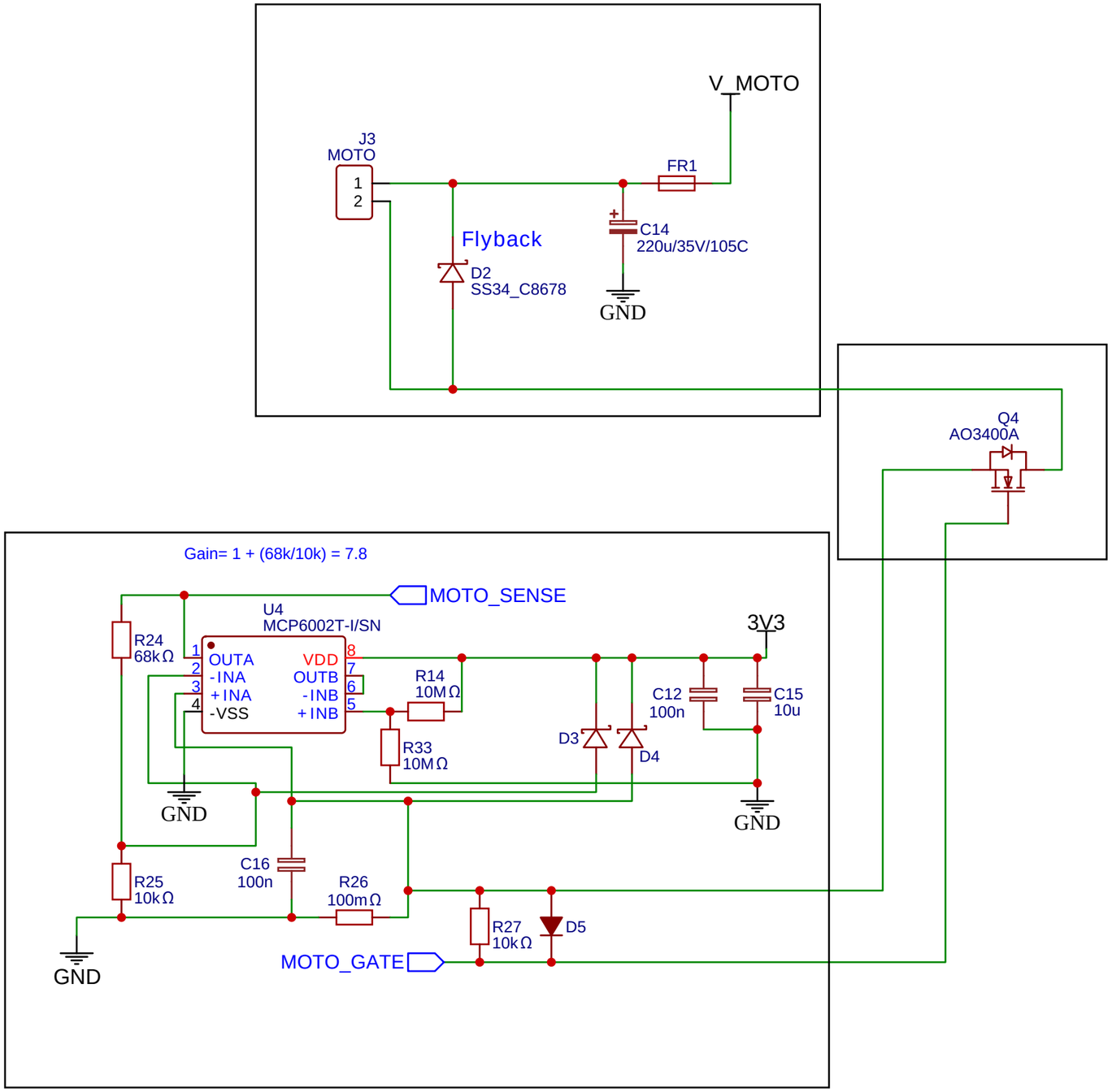

TITLE: Motor		REV: 1.1
EasyEDA	Company:	Sheet: 3/3
	Date: 2025-06-20	Drawn By: Daniel Tschinder