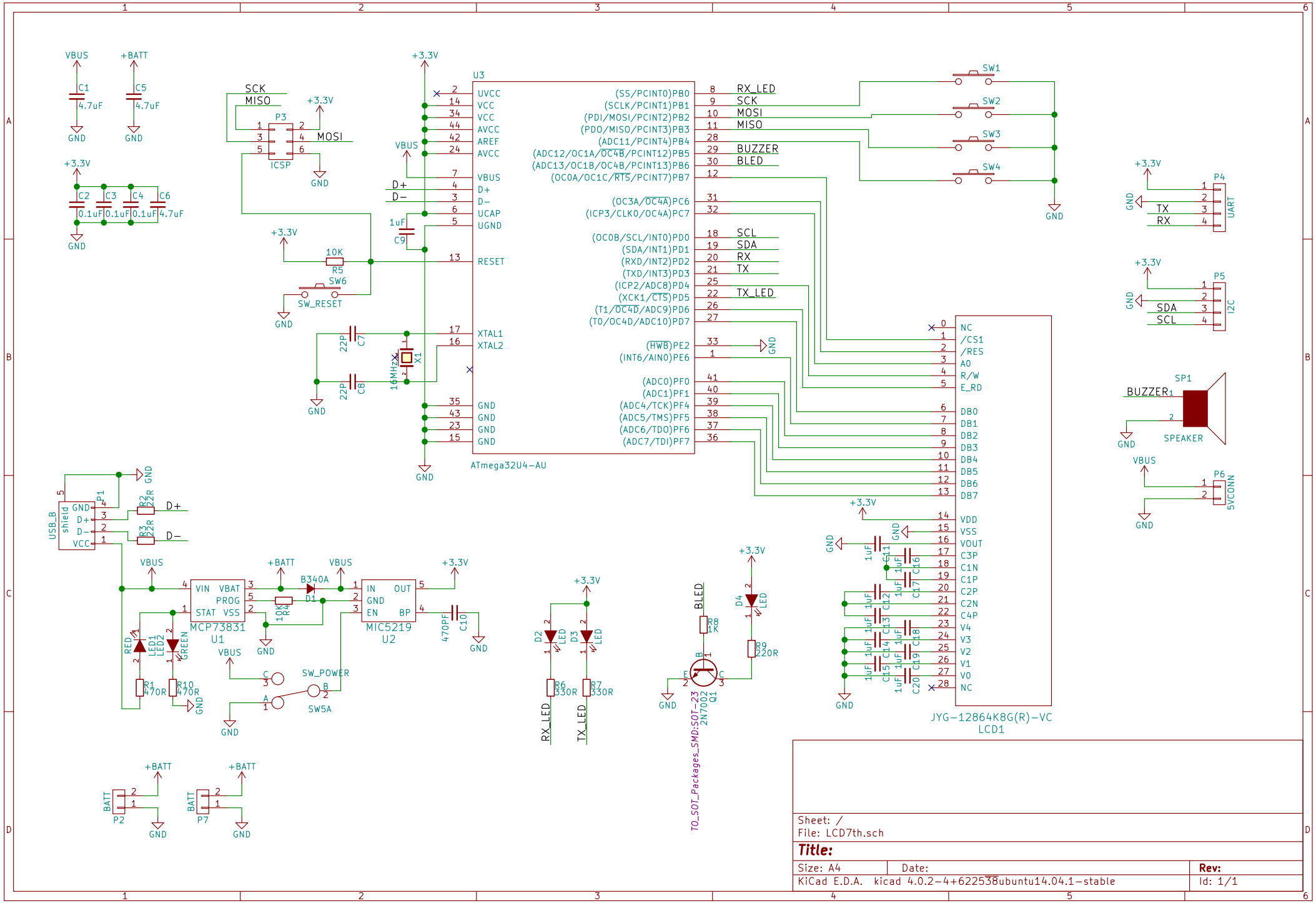
U3
ATmega32U4-AU
(SS/PCINT0)PB0
(SCLK/PCINT1)PB1
(PDI/MOSI/PCINT2)PB2
(PDO/MISO/PCINT3)PB3
(ADC11/PCINT4)PB4
(ADC12/OC1A/OC4B/PCINT12)PB5
(ADC13/OC1B/OC4B/PCINT13)PB6
(OC0A/OC1C/RTS/PCINT7)PB7
(OC3A/OC4A)PC6
(ICP3/CLK0/OC4A)PC7
(OC0B/SCL/INT0)PD0
(SDA/INT1)PD1
(RXD/INT2)PD2
(TXD/INT3)PD3
(ICP2/ADC8)PD4
(XCK1/CTS)PD5
(T1/OC4D/ADC9)PD6
(T0/OC4D/ADC10)PD7
(HWB)PE2
(INT6/AIN0)PE6
(ADC0)PF0
(ADC1)PF1
(ADC4/TCK)PF4
(ADC5/TMS)PF5
(ADC6/TDO)PF6
(ADC7/TDI)PF7
UVCC
VCC
AVCC
AREF
VBUS
D+
D-
UCAP
UGND
RESET
XTAL1
XTAL2
GND
RX_LED
SCK
MOSI
MISO
BUZZER
BLED
SCL
SDA
RX
TX
TX_LED
JYG-12864K8G(R)-VC
LCD1
NC
/CS1
/RES
A0
R/W
E_RD
DB0
DB1
DB2
DB3
DB4
DB5
DB6
DB7
VDD
VSS
VOUT
C3P
C1N
C1P
C2P
C2N
C4P
V4
V3
V2
V1
V0
SW1
SW2
SW3
SW4
P4
UART
P5
I2C
SP1
SPEAKER
P6
5VCONN
P3
ICSP
SW6
SW_RESET
X1
16MHZ
USB_B
shield
MCP73831
U1
VIN
VBAT
PROG
STAT
VSS
MIC5219
U2
IN
OUT
EN
BP
B340A
D1
SW_POWER
SW5A
LED1
LED2
RED
GREEN
D2
D3
D4
LED
Q1
2N7002
TO_SOT_Packages_SMD:SOT-23
P2
P7
BATT
+BATT
+3.3V
VBUS
Sheet: /
File: LCD7th.sch
Title:
Size: A4
Date:
Rev:
KiCad E.D.A. kicad 4.0.2-4+622538ubuntu14.04.1-stable
Id: 1/1