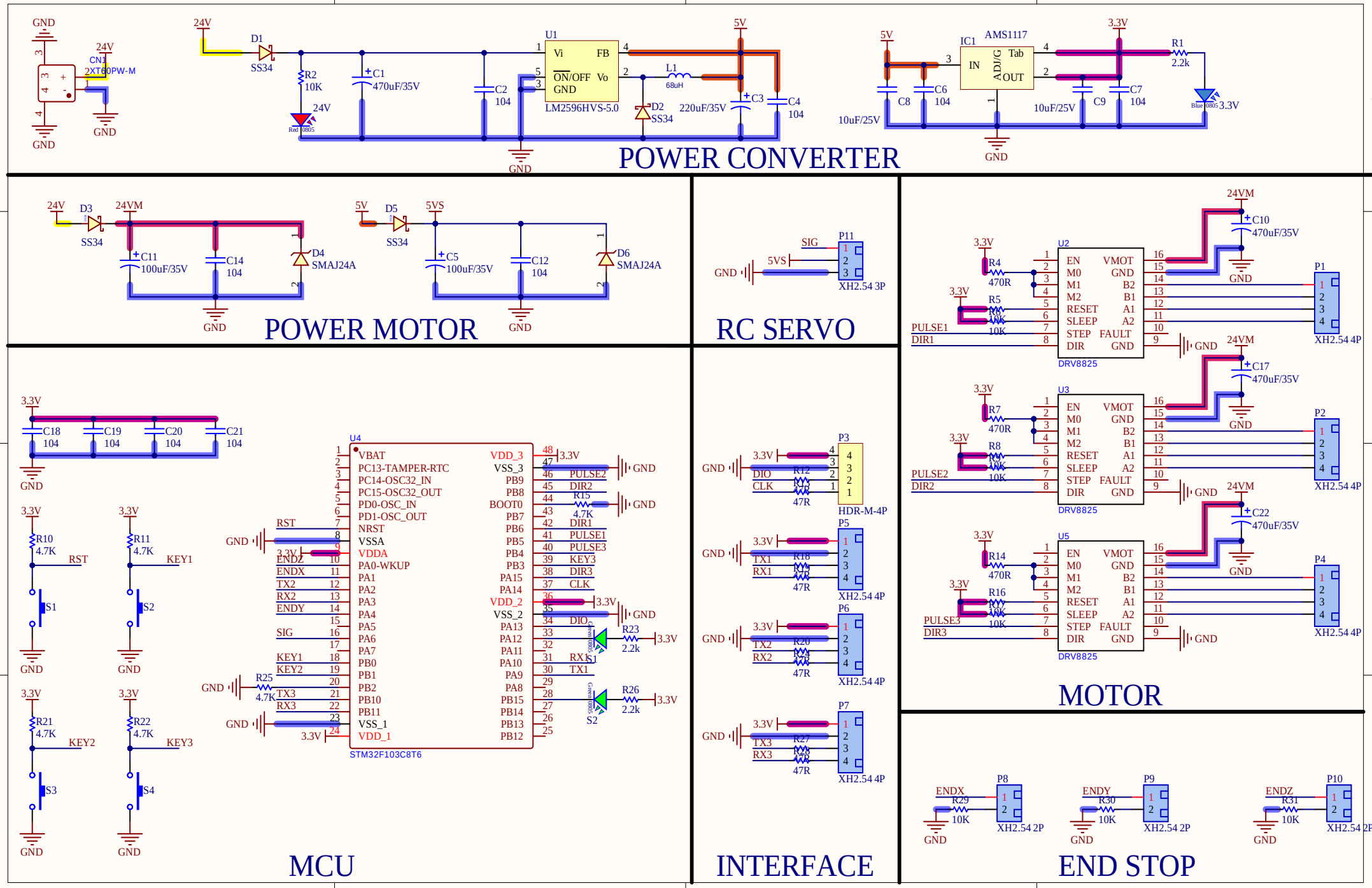
POWER CONVERTER
CN1
2XT60PW-M
D1
SS34
R2
10K
C1
470uF/35V
C2
104
U1
Vi
FB
ON/OFF
Vo
GND
LM2596HVS-5.0
L1
68uH
D2
SS34
220uF/35V
C3
C4
104
IC1
AMS1117
IN
ADJ/G
Tab
OUT
C8
104
C6
104
10uF/25V
C9
C7
104
R1
2.2k
POWER MOTOR
D3
SS34
24VM
C11
100uF/35V
C14
104
D4
SMAJ24A
D5
SS34
5VS
C5
100uF/35V
C12
104
D6
SMAJ24A
RC SERVO
P11
XH2.54 3P
MOTOR
U2
U3
U5
DRV8825
C10
C17
C22
470uF/35V
R4
R7
R14
470R
R5
R8
R16
10K
P1
P2
P4
XH2.54 4P
PULSE1
DIR1
PULSE2
DIR2
PULSE3
DIR3
MCU
C18
C19
C20
C21
104
R10
R11
R21
R22
4.7K
S1
S2
S3
S4
U4
STM32F103C8T6
R15
R25
R23
R26
2.2k
INTERFACE
P3
HDR-M-4P
P5
P6
P7
R12
R18
R20
R27
47R
END STOP
P8
P9
P10
XH2.54 2P
R29
R30
R31
10K