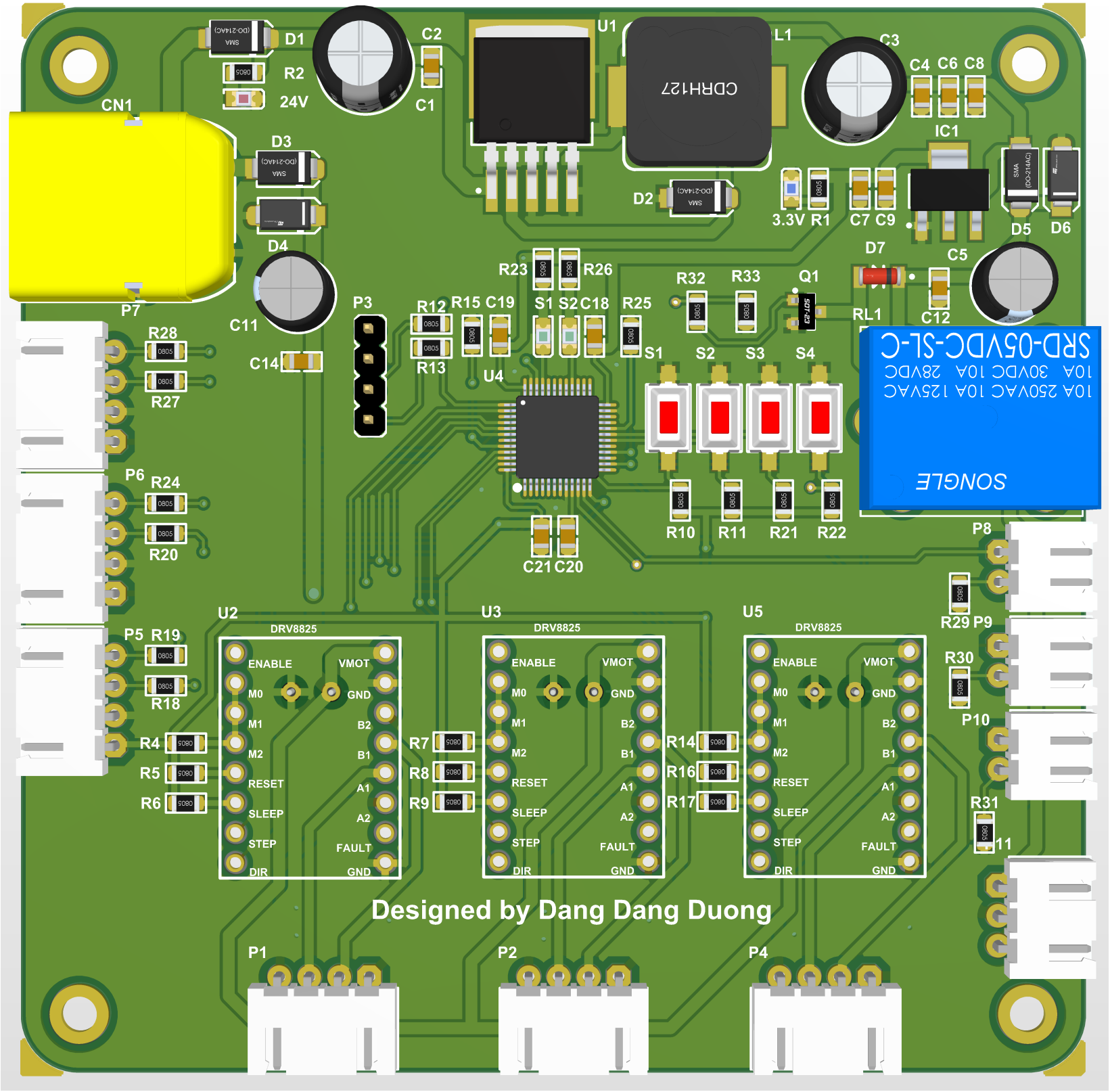
CN1
D1
R2
24V
C2
C1
U1
L1
CDRH127
C3
C4 C6 C8
IC1
D2
3.3V R1
C7 C9
D5 D6
D3
D4
C11
C14
P7
P3
R12 R15 C19
R13
R23 R26
S1 S2 C18
R25
R32 R33
Q1
D7
C5
RL1
C12
SRD-05VDC-SL-C
SONGLE
10A 250VAC 10A 125VAC
10A 30VDC 10A 28VDC
S1 S2 S3 S4
U4
R28
R27
P6 R24
R20
R10 R11 R21 R22
C21 C20
P8
R29 P9
R30
P10
R31
11
P5 R19
R18
U2
DRV8825
ENABLE
M0
M1
M2
RESET
SLEEP
STEP
DIR
VMOT
GND
B2
B1
A1
A2
FAULT
GND
R4
R5
R6
R7
R8
R9
U3
DRV8825
R14
R16
R17
U5
DRV8825
Designed by Dang Dang Duong
P1
P2
P4

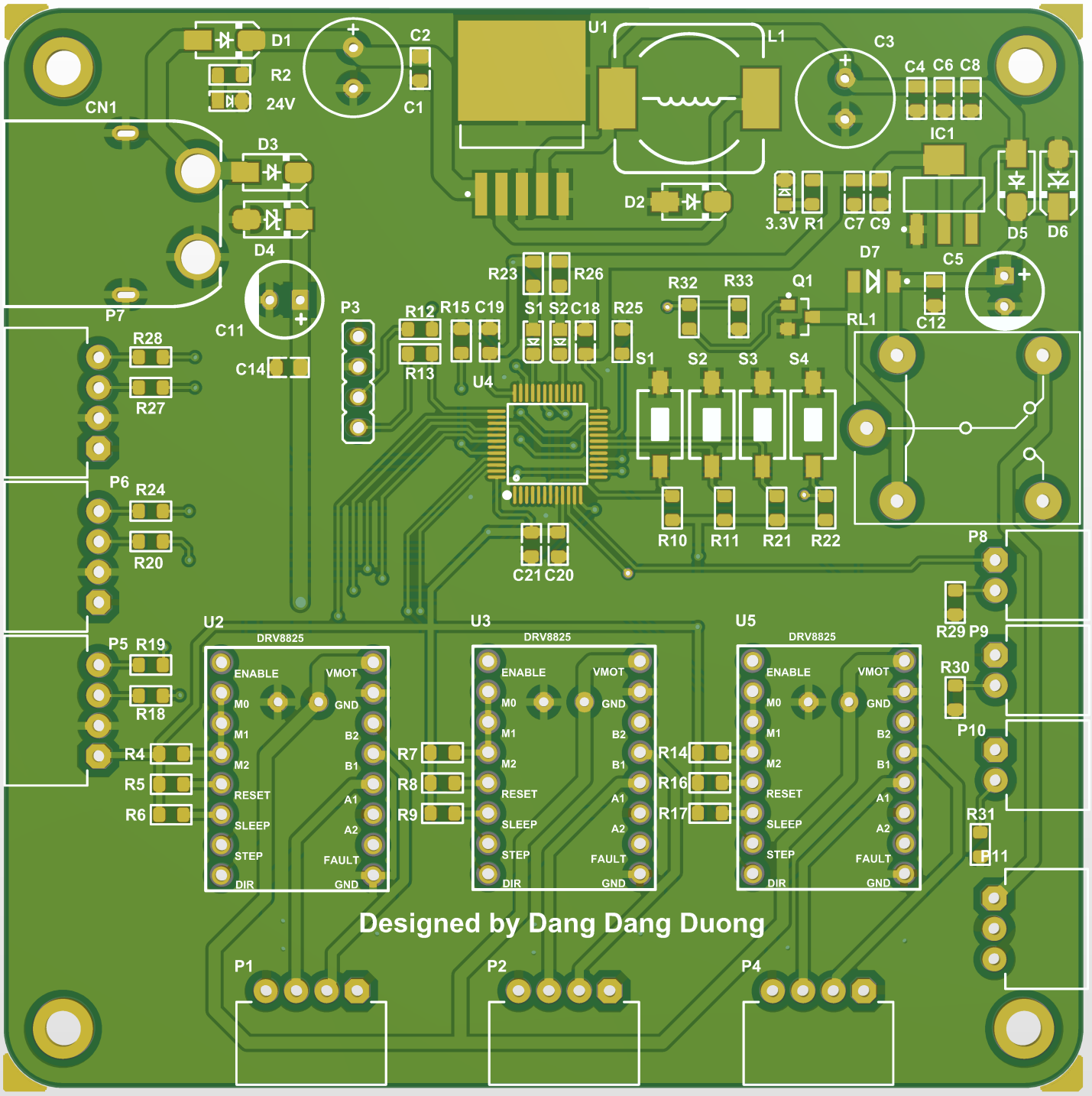
D1
R2
24V
C2
C1
U1
L1
C3
C4 C6 C8
CN1
IC1
D3
D2
3.3V R1
C7 C9
D5 D6
D4
D7
C5
R23
R26
R32
R33
Q1
P7
C11
P3
R12 R15 C19
S1 S2 C18
R25
RL1
C12
R28
C14
R13
U4
S1
S2
S3
S4
R27
P6 R24
R20
R10
R11
R21
R22
P8
C21 C20
R29 P9
U2
DRV8825
U3
DRV8825
U5
DRV8825
P5 R19
R18
R30
P10
R4
R5
R6
R7
R8
R9
R14
R16
R17
R31
P11
ENABLE
M0
M1
M2
RESET
SLEEP
STEP
DIR
VMOT
GND
B2
B1
A1
A2
FAULT
GND
Designed by Dang Dang Duong
P1
P2
P4

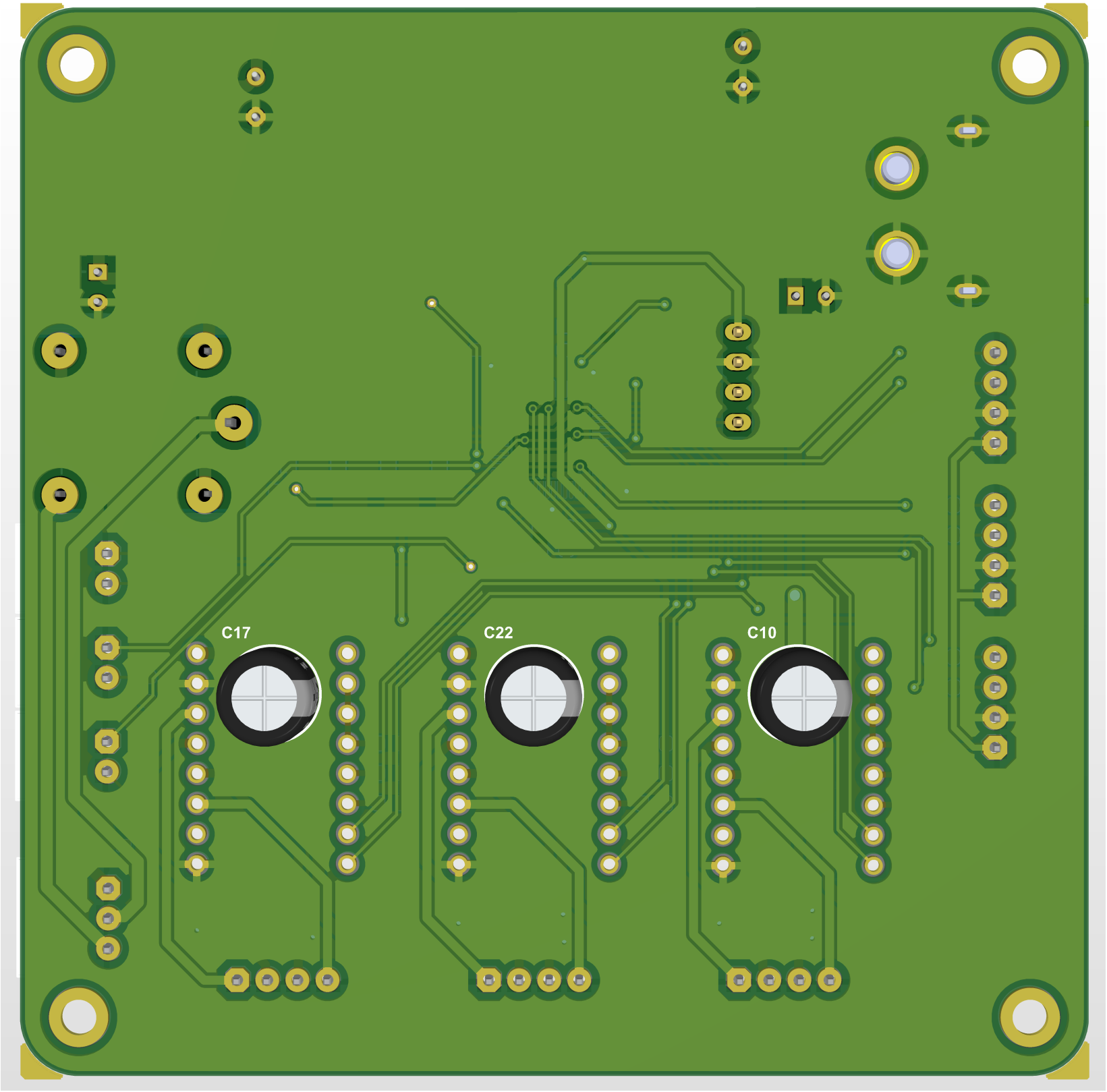
C17
C22
C10

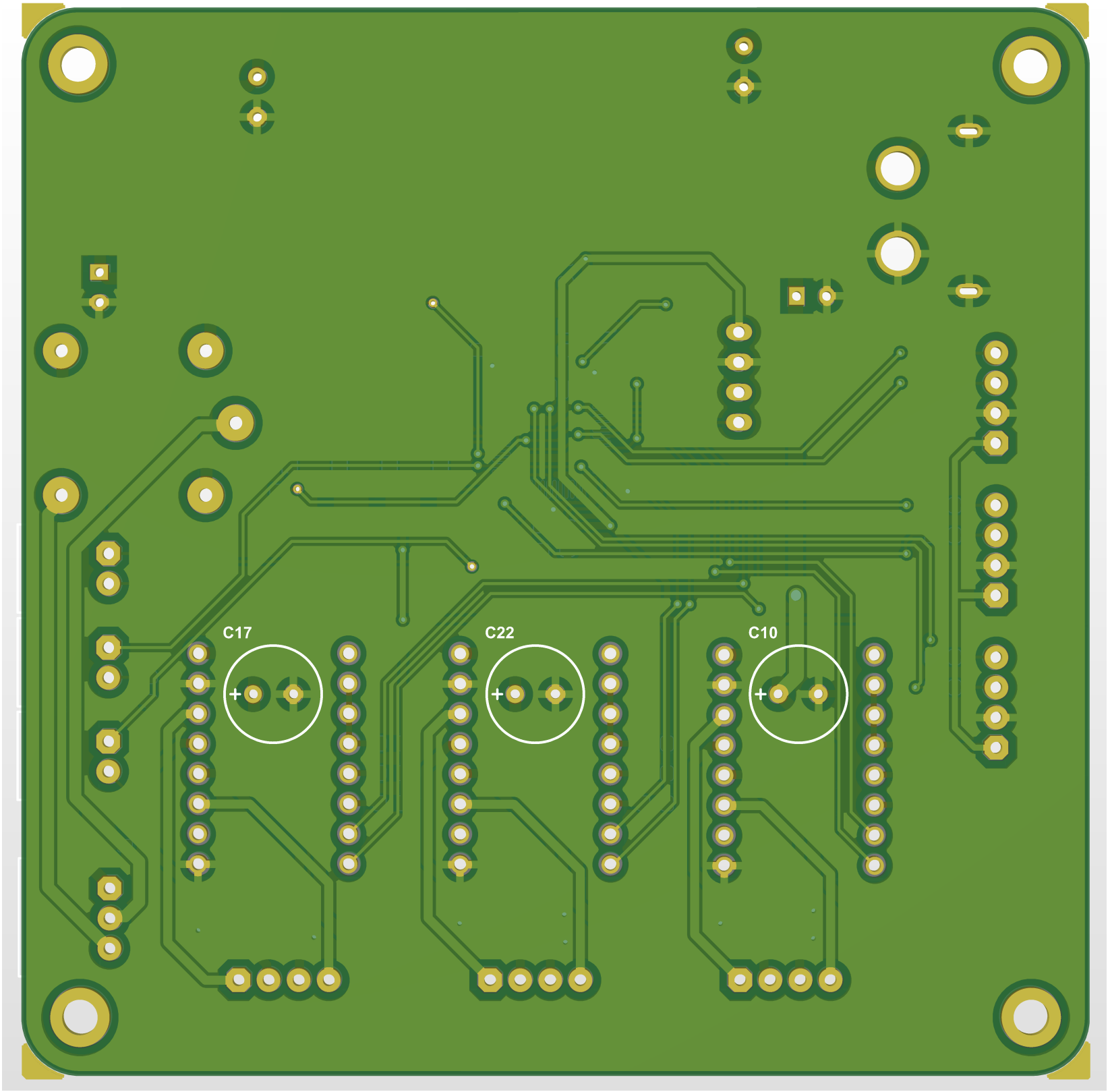
C17
C22
C10