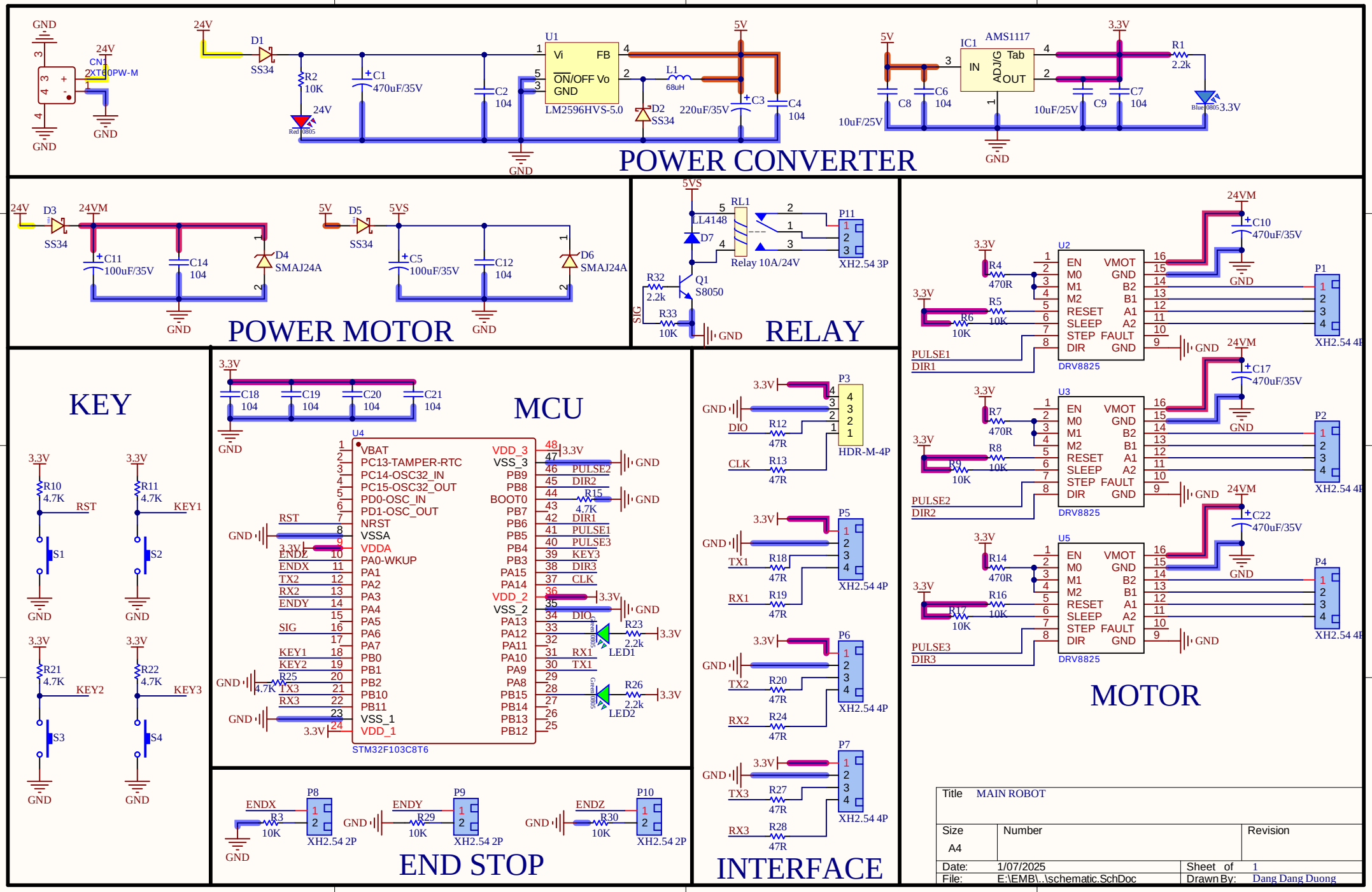
POWER CONVERTER
CN1
2XT60PW-M
D1
SS34
R2
10K
C1
470uF/35V
C2
104
U1
Vi
FB
ON/OFF Vo
GND
LM2596HVS-5.0
L1
68uH
D2
SS34
220uF/35V
C3
C4
104
IC1
AMS1117
IN
ADJ/G
Tab
OUT
C8
104
C6
104
10uF/25V
C7
104
C9
10uF/25V
R1
2.2k
POWER MOTOR
D3
SS34
24VM
C11
100uF/35V
C14
104
D4
SMAJ24A
D5
SS34
5VS
C5
100uF/35V
C12
104
D6
SMAJ24A
RELAY
RL1
LL4148
D7
Relay 10A/24V
P11
XH2.54 3P
R32
2.2k
Q1
S8050
R33
10K
SIG
MOTOR
U2
U3
U5
EN
M0
M1
M2
RESET
SLEEP
STEP
DIR
VMOT
GND
B1
B2
A1
A2
FAULT
DRV8825
C10
470uF/35V
C17
470uF/35V
C22
470uF/35V
R4
470R
R5
10K
R6
10K
R7
470R
R8
10K
R9
10K
R14
470R
R16
10K
R17
10K
P1
P2
P4
XH2.54 4P
PULSE1
DIR1
PULSE2
DIR2
PULSE3
DIR3
KEY
R10
4.7K
R11
4.7K
R21
4.7K
R22
4.7K
RST
KEY1
KEY2
KEY3
S1
S2
S3
S4
MCU
C18
104
C19
104
C20
104
C21
104
U4
VBAT
PC13-TAMPER-RTC
PC14-OSC32_IN
PC15-OSC32_OUT
PD0-OSC_IN
PD1-OSC_OUT
NRST
VSSA
VDDA
PA0-WKUP
PA1
PA2
PA3
PA4
PA5
PA6
PA7
PB0
PB1
PB2
PB10
PB11
VSS_1
VDD_1
VDD_3
VSS_3
PB9
PB8
BOOT0
PB7
PB6
PB5
PB4
PB3
PA15
PA14
VDD_2
VSS_2
PA13
PA12
PA11
PA10
PA9
PA8
PB15
PB14
PB13
PB12
ENDZ
ENDX
TX2
RX2
ENDY
SIG
KEY1
KEY2
TX3
RX3
PULSE2
DIR2
R15
4.7K
DIR1
PULSE1
PULSE3
KEY3
DIR3
CLK
DIO
RX1
TX1
R23
2.2k
LED1
R26
2.2k
LED2
STM32F103C8T6
END STOP
P8
P9
P10
R3
10K
R29
10K
R30
10K
XH2.54 2P
INTERFACE
P3
HDR-M-4P
R12
47R
R13
47R
P5
R18
47R
R19
47R
P6
R20
47R
R24
47R
P7
R27
47R
R28
47R
Title MAIN ROBOT
Size A4
Number
Revision
Date: 1/07/2025
Sheet of 1
File: E:\EMB\...\schematic.SchDoc
Drawn By: Dang Dang Duong