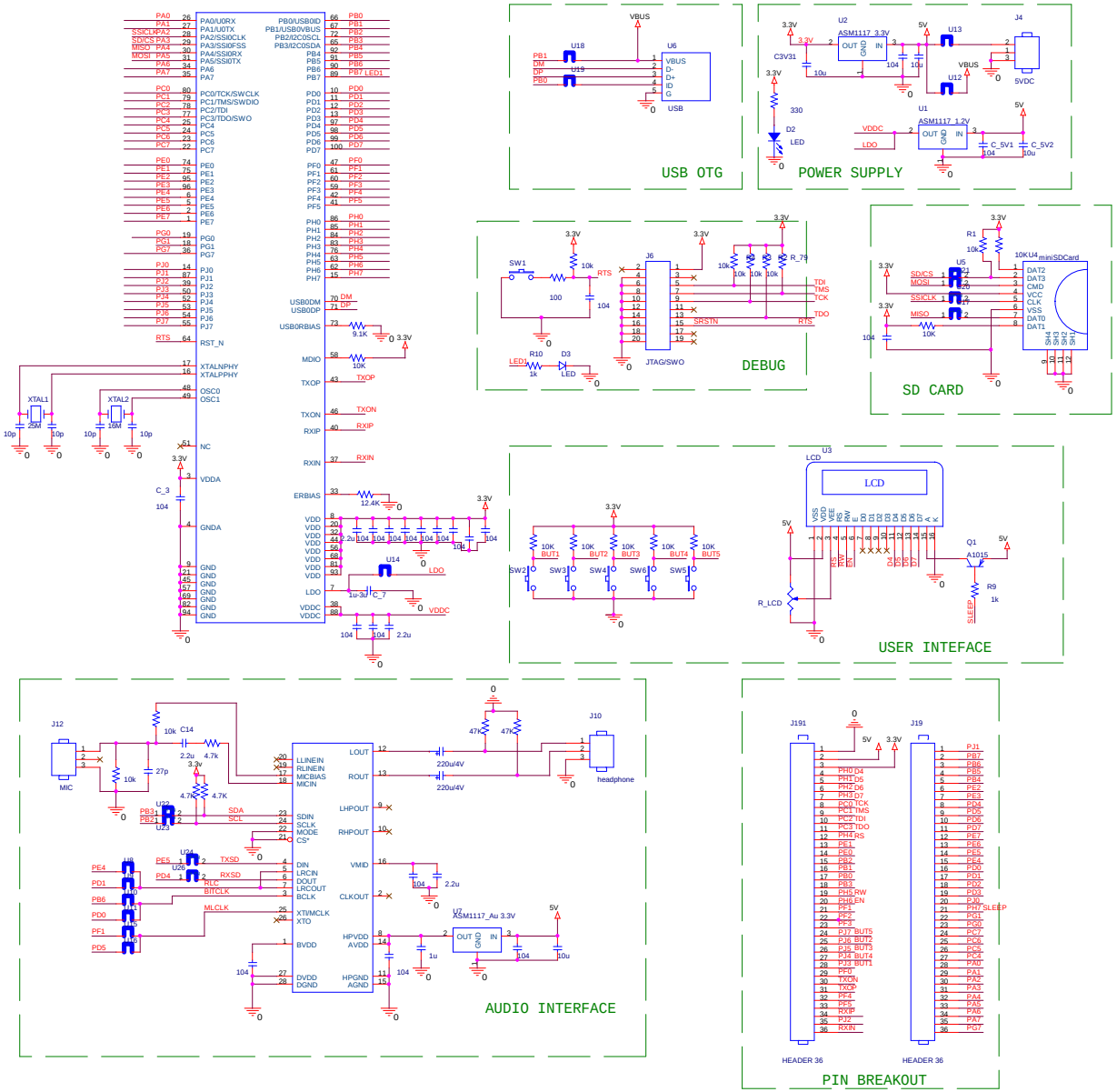
USB OTG
POWER SUPPLY
DEBUG
SD CARD
USER INTEFACE
AUDIO INTERFACE
PIN BREAKOUT
U6
USB
U2
ASM1117_3.3V
U13
J4
5VDC
U12
U1
ASM1117_1.2V
U5
10KU4 miniSDCard
J6
JTAG/SWO
U3
LCD
Q1
A1015
R9
1k
R_LCD
J12
MIC
J10
headphone
U22
U23
U24
U25
U26
ASM1117_Au 3.3V
J191
J19
HEADER 36
HEADER 36
XTAL1
XTAL2
U14
LDO
VDDC
RST_N
XTALNPHY
XTALPPHY
OSC0
OSC1
VDDA
GNDA
USB0DM
USB0DP
USB0RBIAS
MDIO
TXOP
TXON
RXIP
RXIN
ERBIAS
LLINEIN
RLINEIN
MICBIAS
MICIN
LOUT
ROUT
LHPOUT
RHPOUT
VMID
CLKOUT
SDIN
SCLK
MODE
CS*
DIN
LRCIN
DOUT
LRCOUT
BCLK
XTI/MCLK
XTO
BVDD
DVDD
DGND
HPVDD
AVDD
HPGND
AGND
SDA
SCL
TXSD
RXSD
MLCLK
BITCLK
LRC
PB0
PB1
PB2
PB3
PB4
PB5
PB6
PB7 LED1
PC0
PC1
PC2
PC3
PC4
PC5
PC6
PC7
PD0
PD1
PD2
PD3
PD4
PD5
PD6
PD7
PE0
PE1
PE2
PE3
PE4
PE5
PE6
PE7
PF0
PF1
PF2
PF3
PF4
PF5
PF6
PF7
PG0
PG1
PG7
PH0
PH1
PH2
PH3
PH4
PH5
PH6
PH7
PJ0
PJ1
PJ2
PJ3
PJ4
PJ5
PJ6
PJ7
RTS
TDI
TMS
TCK
TDO
SRSTN
SD/CS
MOSI
SSICLK
MISO
DAT2
DAT3
CMD
VCC
CLK
VSS
DAT0
DAT1
LCD
VSS
VDD
VEE
RW
E
D0
D1
D2
D3
D4
D5
D6
D7
A
K
RS
RST
CS1
CS2
SLEEP
PJ1
PB7
PB6
PB5
PB4
PE2
PE3
PD4
PD5
PD6
PD7
PE7
PE6
PE5
PE4
PD0
PD1
PD2
PD3
PJ0
PH7 SLEEP
PG1
PG0
PC7
PC6
PC5
PC4
PA0
PA1
PA2
PA3
PA4
PA5
PA6
PA7
PG7
PH0 D4
PH1 D5
PH2 D6
PH3 D7
PC0 TCK
PC1 TMS
PC2 TDI
PC3 TDO
PH4 RS
PE1
PE0
PB2
PB1
PB0
PB3
PH5 RW
PH6 EN
PF1
PF2
PF3
PJ7 BUT5
PJ6 BUT2
PJ5 BUT3
PJ4 BUT4
PJ3 BUT1
PF0
TXON
TXOP
PF4
PF5
RXIP
PJ2
RXIN
Title
<Title>
Size
A2
Document Number
<Doc>
Rev
<RevCode>
Date:
Saturday, September 03, 2011
Sheet
1
of
1