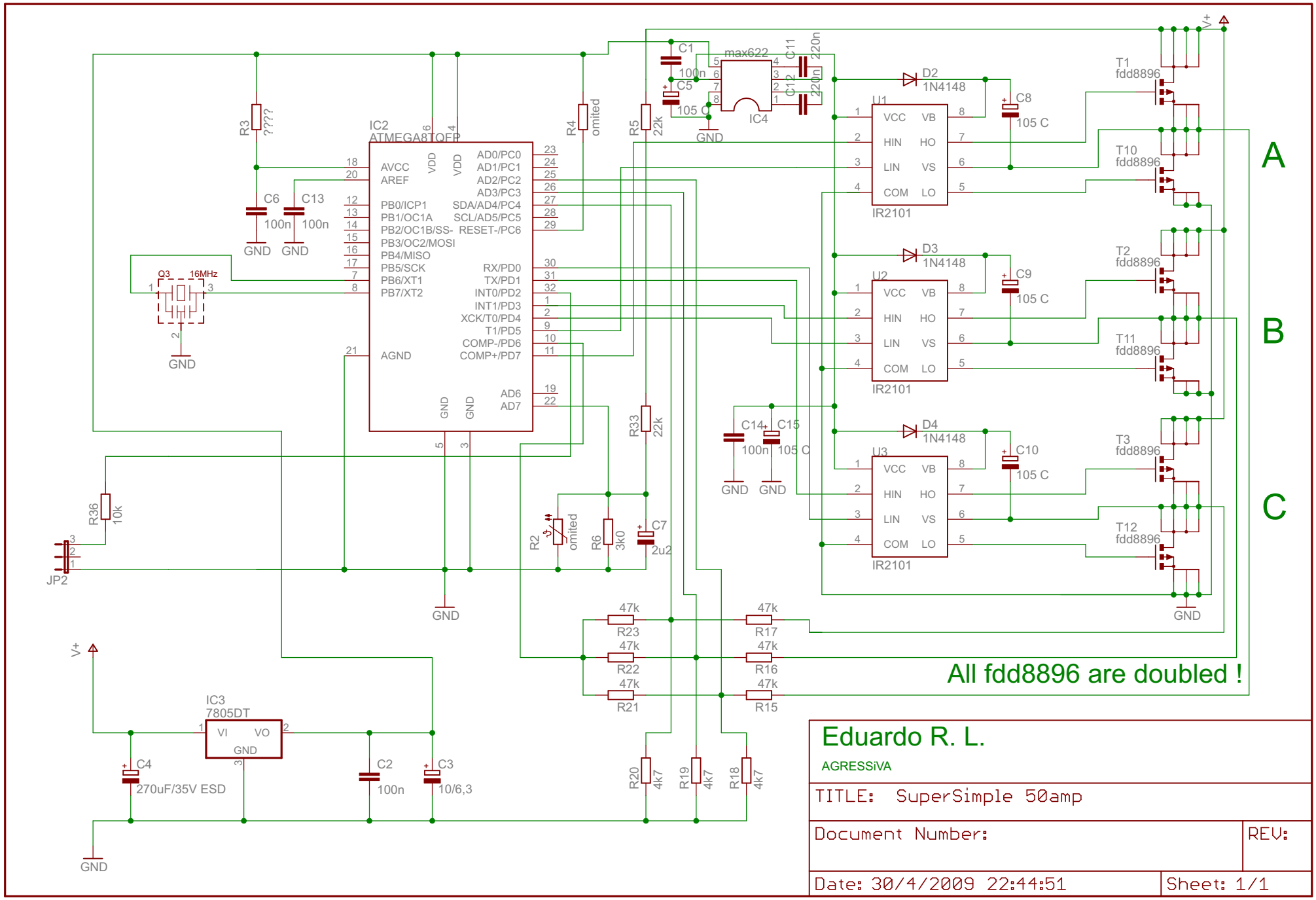
IC2
ATMEGA8TQFP
AVCC
AREF
VDD
VDD
PB0/ICP1
PB1/OC1A
PB2/OC1B/SS-
PB3/OC2/MOSI
PB4/MISO
PB5/SCK
PB6/XT1
PB7/XT2
AGND
AD0/PC0
AD1/PC1
AD2/PC2
AD3/PC3
SDA/AD4/PC4
SCL/AD5/PC5
RESET-/PC6
RX/PD0
TX/PD1
INT0/PD2
INT1/PD3
XCK/T0/PD4
T1/PD5
COMP-/PD6
COMP+/PD7
AD6
AD7
GND
GND
R3
????
C6
100n
C13
100n
Q3
16MHz
R4
omited
R5
22k
C1
100n
C5
105 C
max622
IC4
C11
220n
C12
220n
D2
1N4148
D3
1N4148
D4
1N4148
U1
U2
U3
VCC
VB
HIN
HO
LIN
VS
COM
LO
IR2101
C8
105 C
C9
105 C
C10
105 C
T1
fdd8896
T10
fdd8896
T2
fdd8896
T11
fdd8896
T3
fdd8896
T12
fdd8896
A
B
C
V+
R33
22k
C14
100n
C15
105 C
R36
10k
JP2
R2
omited
R6
3k0
C7
2u2
47k
R23
47k
R22
47k
R21
47k
R17
47k
R16
47k
R15
All fdd8896 are doubled !
IC3
7805DT
VI
VO
GND
C4
270uF/35V ESD
C2
100n
C3
10/6,3
R20
4k7
R19
4k7
R18
4k7
Eduardo R. L.
AGRESSiVA
TITLE: SuperSimple 50amp
Document Number:
REV:
Date: 30/4/2009 22:44:51
Sheet: 1/1