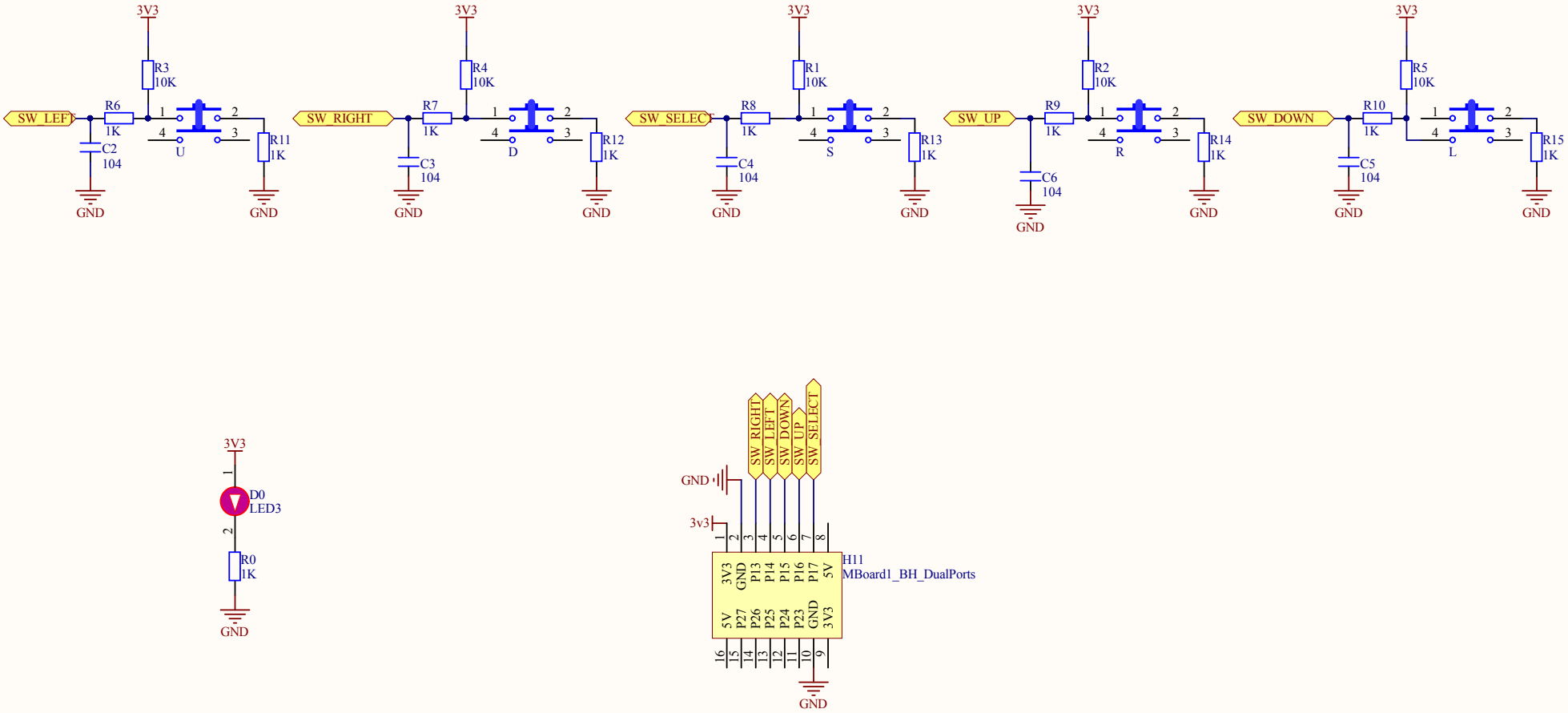

Title	***HLib-UI-Buttons***		* * * * *
Size: A4	Number:*	Revision:*	
Date: 7/24/2015	Time: 9:56:35 AM	Sheet 1 of 1	
File: C:\Users\DangNhat\Desktop\hlib\hardwares\EBoard\UI\BUTTON\EBoard_UI_Button_r1.SchDoc			

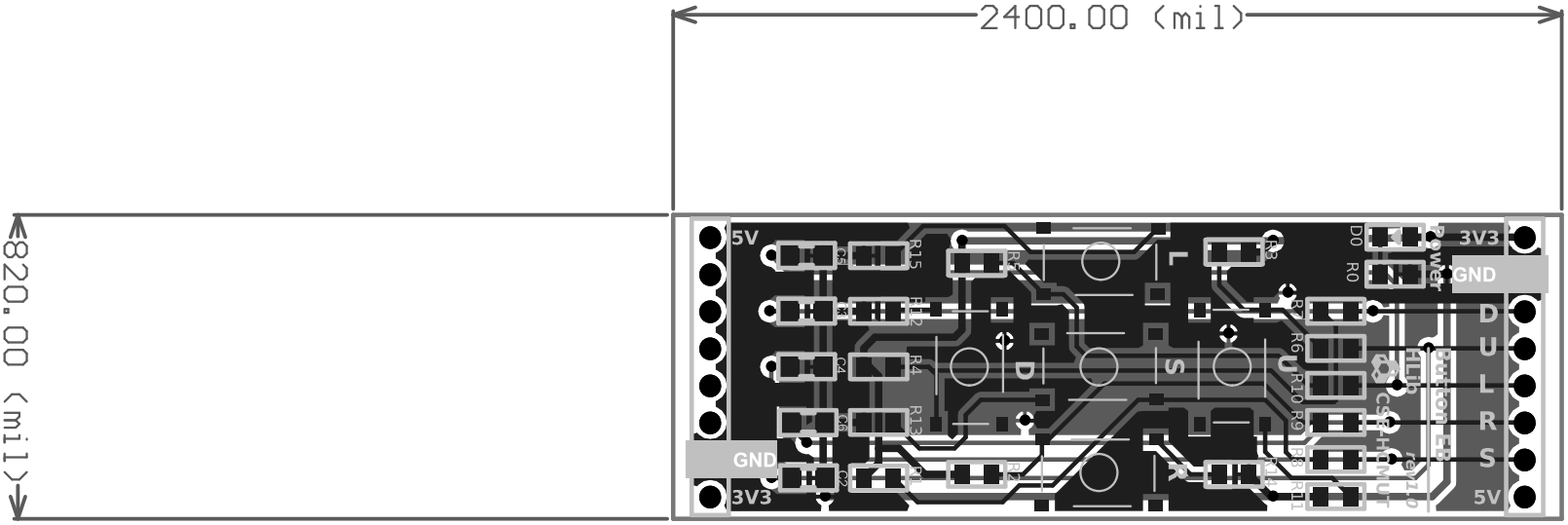
2400.00 (mil)
820.00 (mil)
5V
3V3
GND
D
U
L
R
S
5V
3V3
GND
Power
Hub
CSR-Hub-Out
2016
D0
R0
R15
R14
R13
R12
R11
R10
R9
R8
R7
R6
R5
R4
R3
R2
R1
C1
C2
C3
C4
C5
C6
C7
C8