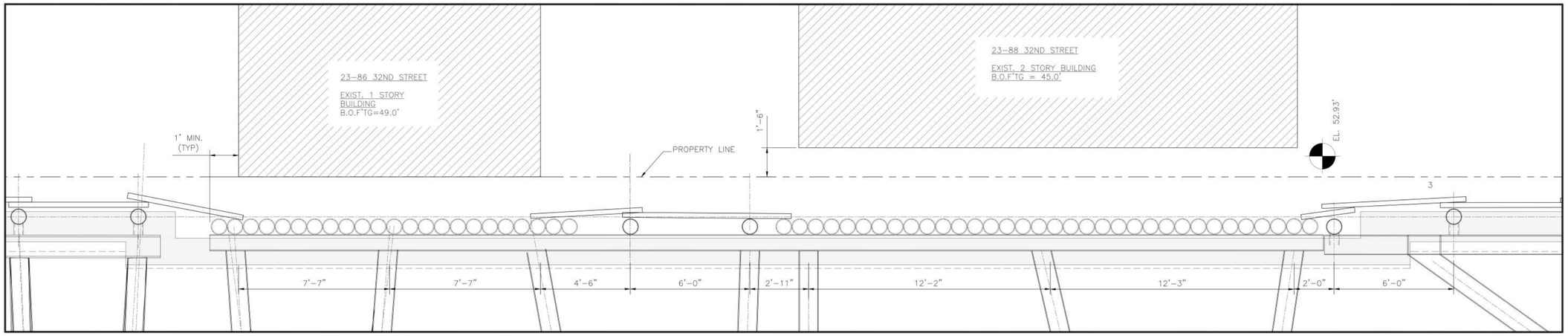

DETAIL 1
SCALE: 3/8" = 1'

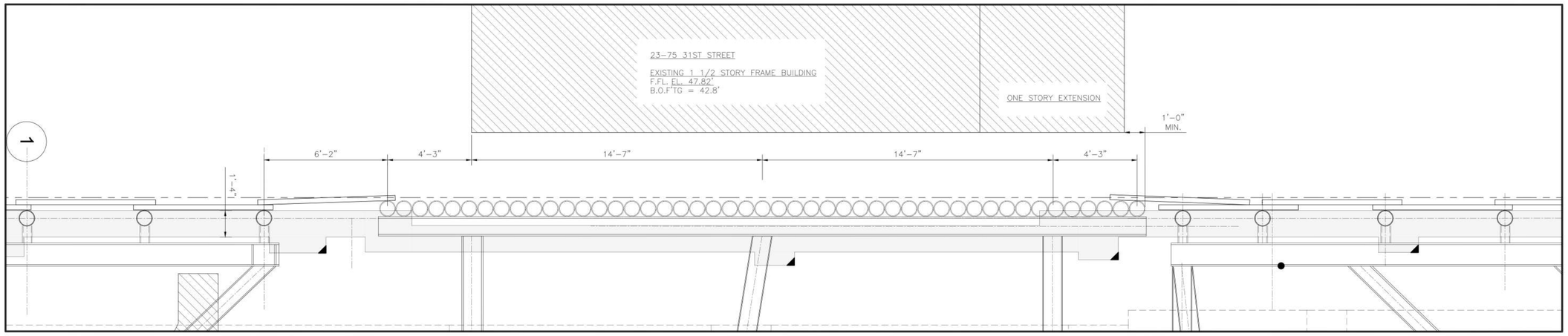

DETAIL 2
SCALE: 3/8" = 1'

No.	DESCRIPTION	DATE
1	REVISION	09/05/23
2	REVISION	09/19/23
3	REVISION	10/02/23

CLIENT:

DIFIORE & SONS DEVELOPMENT
ASTORIA, NY 11105

DOB NOW JOB NO. :
Q00484597-P6

PROJECT TITLE:
23-81 31ST STREET
ASTORIA, NY 11105

DRAWING TITLE:
SUPPORT OF EXCAVATION DETAIL PLAN

SIGN & SEAL :

DRAWING NO.
SOE-003.01

DATE : 08/21/23

PROJECT NO. : 220202

SHEET SCALE : AS NOTED

DRAWN BY : SD | CHECKED BY : ERK | SHEET: 3 OF 9

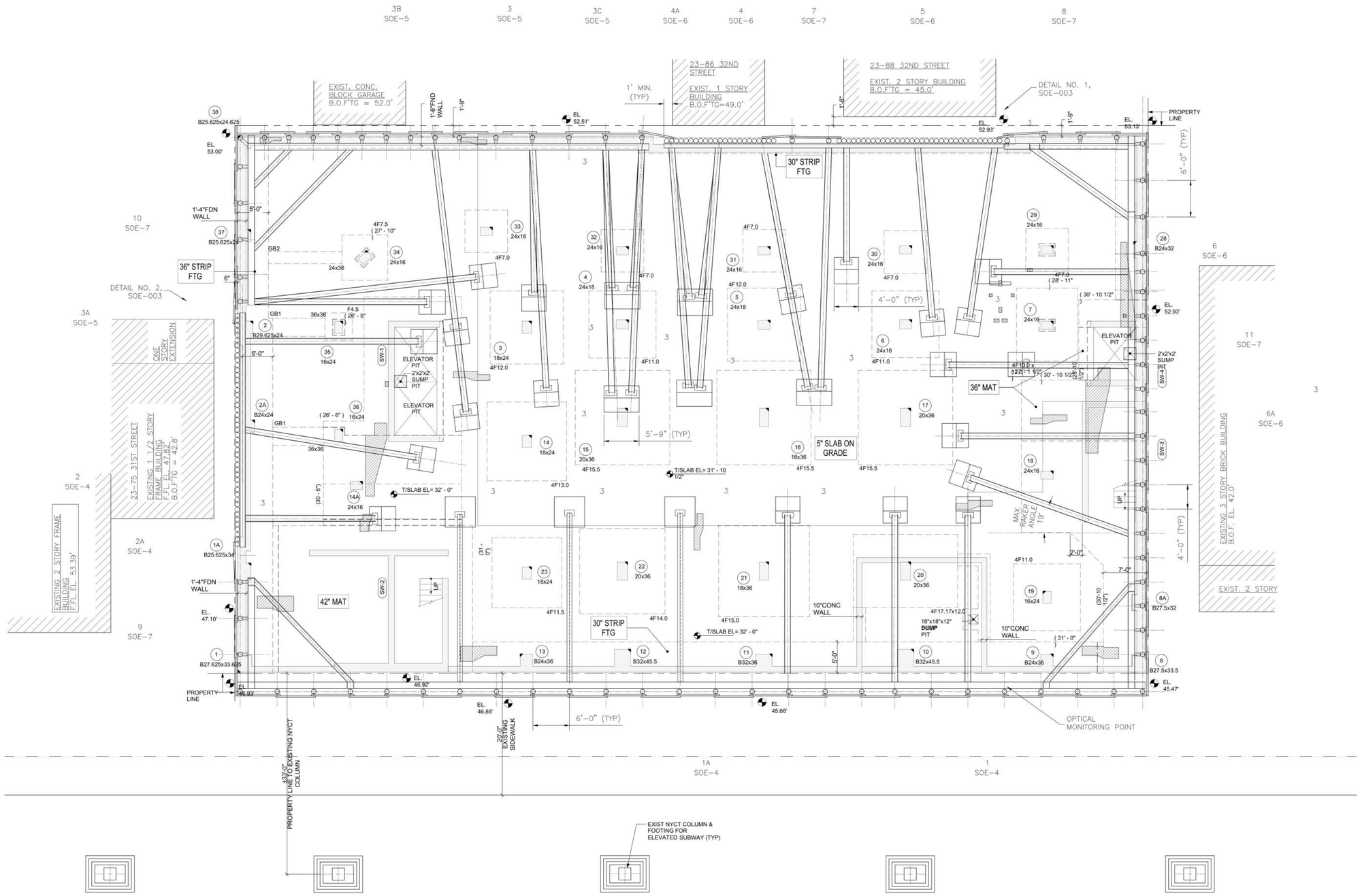

EXISTING NYCT SUBWAY (ELEVATED)

No.	DESCRIPTION	DATE
1	REVISION	09/05/23
2	REVISION	09/19/23
3	REVISION	10/02/23

CLIENT:

DIFIORE & SONS DEVELOPMENT
ASTORIA, NY 11105

DOB NOW JOB NO. :

Q00484597-P6

PROJECT TITLE:

23-81 31ST STREET
ASTORIA, NY 11105

DRAWING TITLE:

SUPPORT OF EXCAVATION PLAN

SIGN & SEAL :

DRAWING NO.

SOE-002.01

DATE : 08/21/23

PROJECT NO. : 220202

SHEET SCALE : 1/8" = 1

DRAWN BY : SD

CHECKED BY : ERK

SHEET: 2 OF 9

NOTE: ALL FOUNDATION DRAWINGS HAVE BEEN BEEN REPLACED TO REFLECT LATEST VERSION DATED 09/22/23.

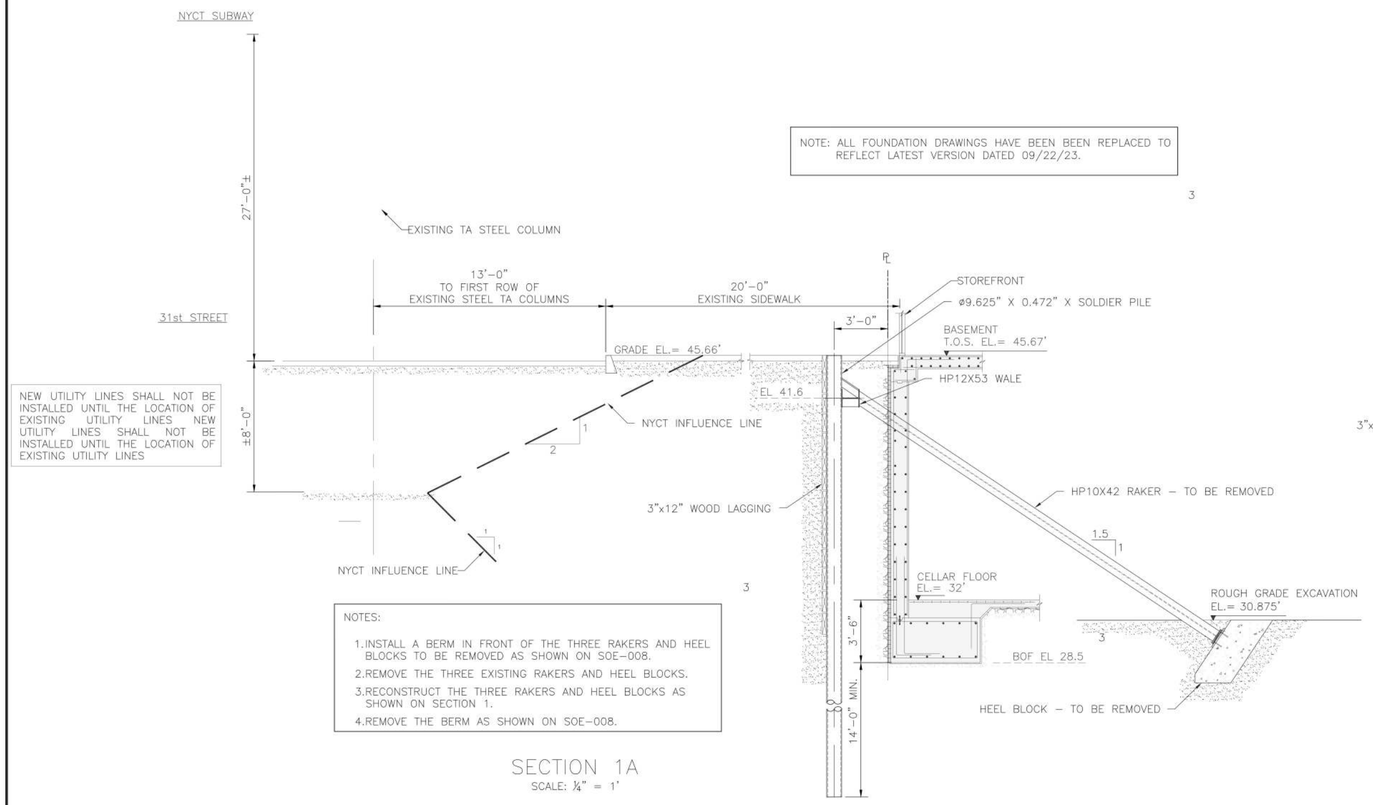

NEW UTILITY LINES SHALL NOT BE INSTALLED UNTIL THE LOCATION OF EXISTING UTILITY LINES NEW UTILITY LINES SHALL NOT BE INSTALLED UNTIL THE LOCATION OF EXISTING UTILITY LINES

NOTES:

1. INSTALL A BERM IN FRONT OF THE THREE RAKERS AND HEEL BLOCKS TO BE REMOVED AS SHOWN ON SOE-008.
2. REMOVE THE THREE EXISTING RAKERS AND HEEL BLOCKS.
3. RECONSTRUCT THE THREE RAKERS AND HEEL BLOCKS AS SHOWN ON SECTION 1.
4. REMOVE THE BERM AS SHOWN ON SOE-008.

SECTION 1A
SCALE: ¼" = 1'

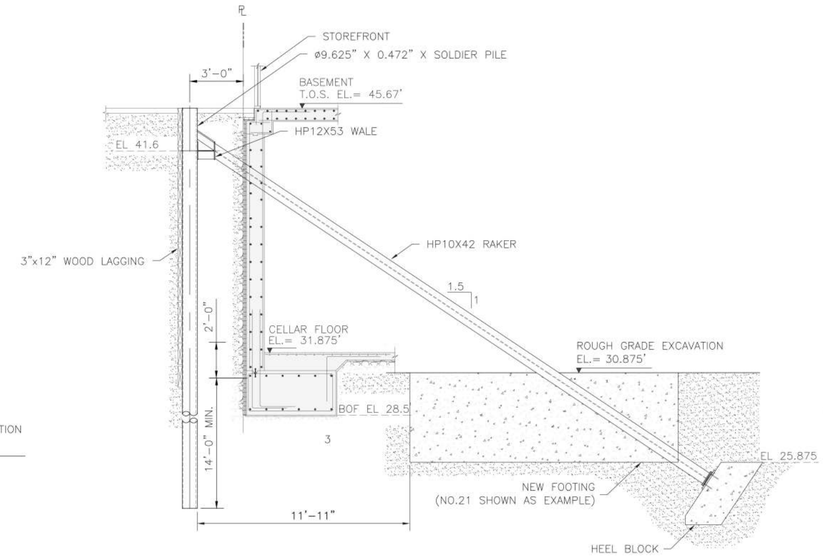

SECTION 1
SCALE: ¼" = 1'

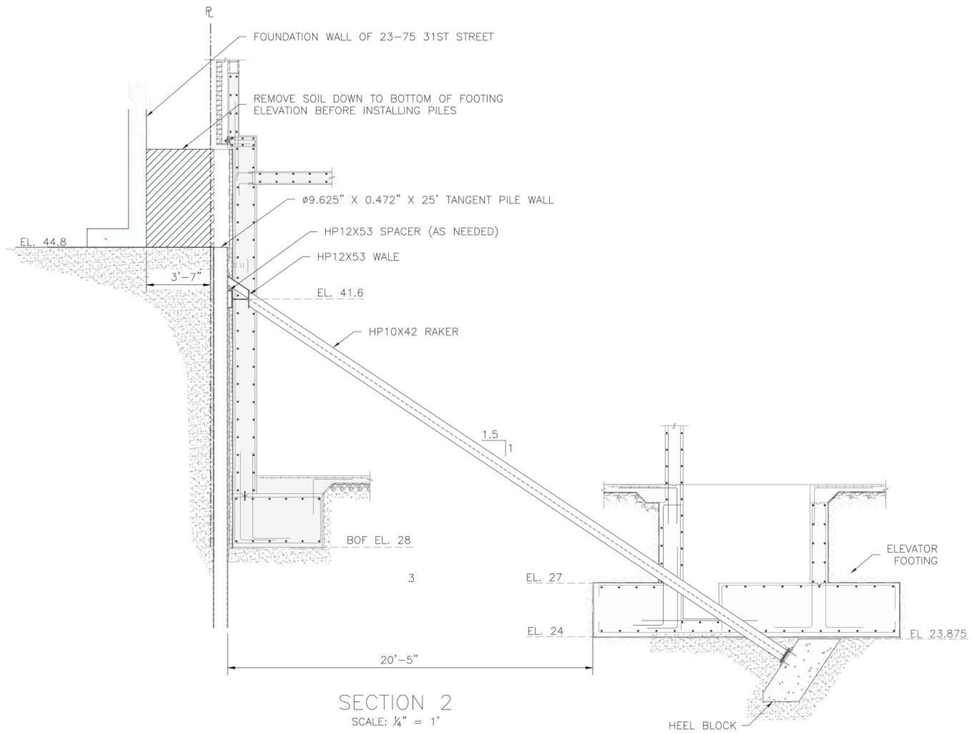

SECTION 2
SCALE: ¼" = 1'

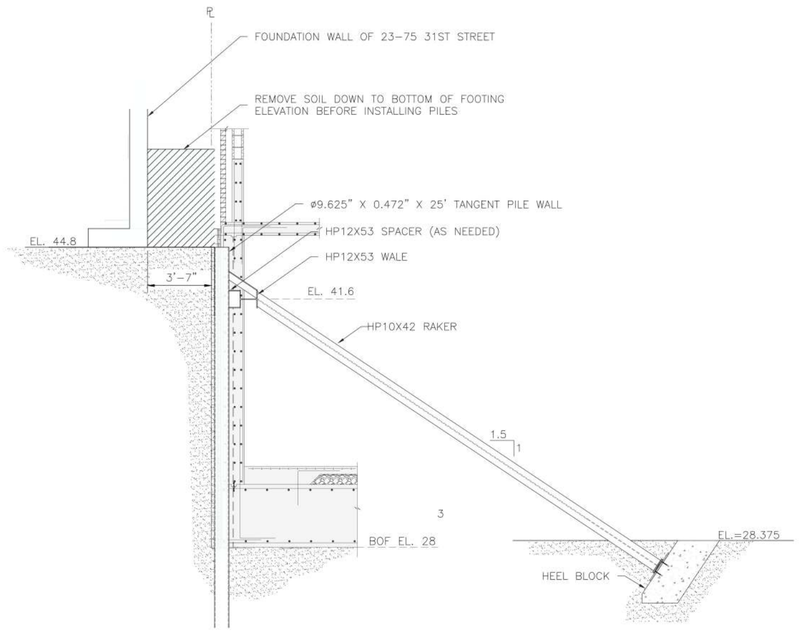

SECTION 2A
SCALE: ¼" = 1'

No.	DESCRIPTION	DATE
1	REVISION	09/05/23
2	REVISION	09/19/23
3	REVISION	10/02/23

CLIENT:

DIFIORE & SONS DEVELOPMENT
ASTORIA, NY 11105

DOB NOW JOB NO. :
Q00484597-P6

PROJECT TITLE:
23-81 31ST STREET
ASTORIA, NY 11105

DRAWING TITLE:
SHEETING AND SHORING SECTIONS

SIGN & SEAL :

DRAWING NO.
SOE-004.01

DATE : 08/21/23

PROJECT NO. : 220202

SHEET SCALE : AS NOTED

DRAWN BY : SD | CHECKED BY : ERK | SHEET: 4 OF 9

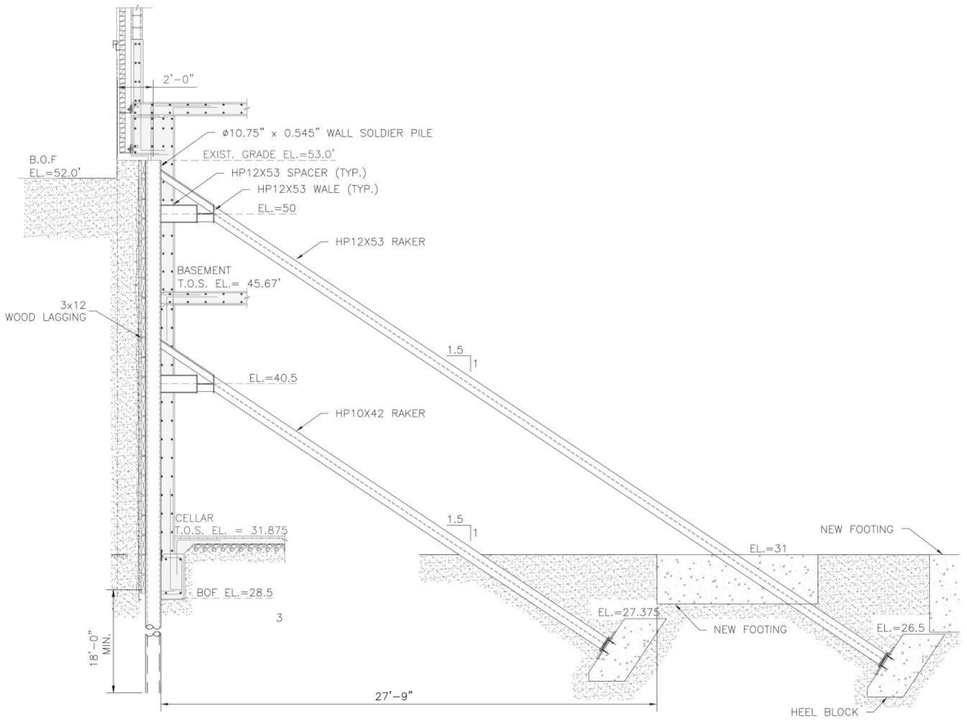

SECTION 3
SCALE: ¼" = 1'

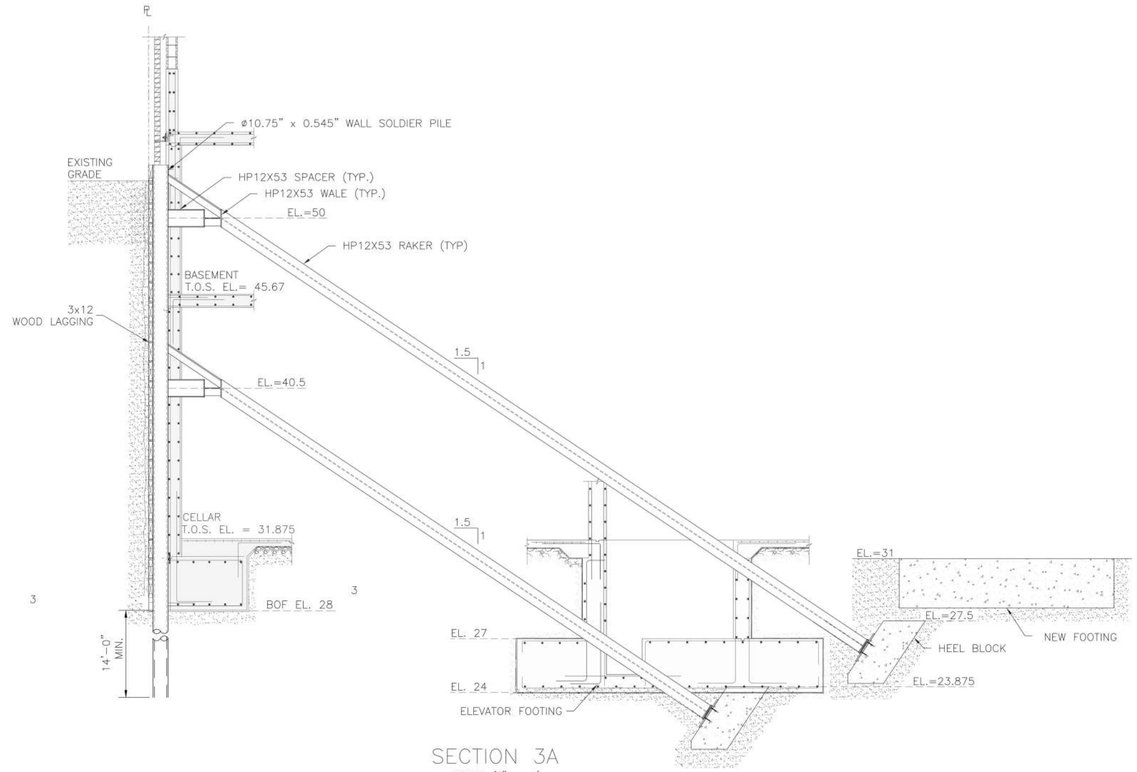

SECTION 3A
SCALE: ¼" = 1'

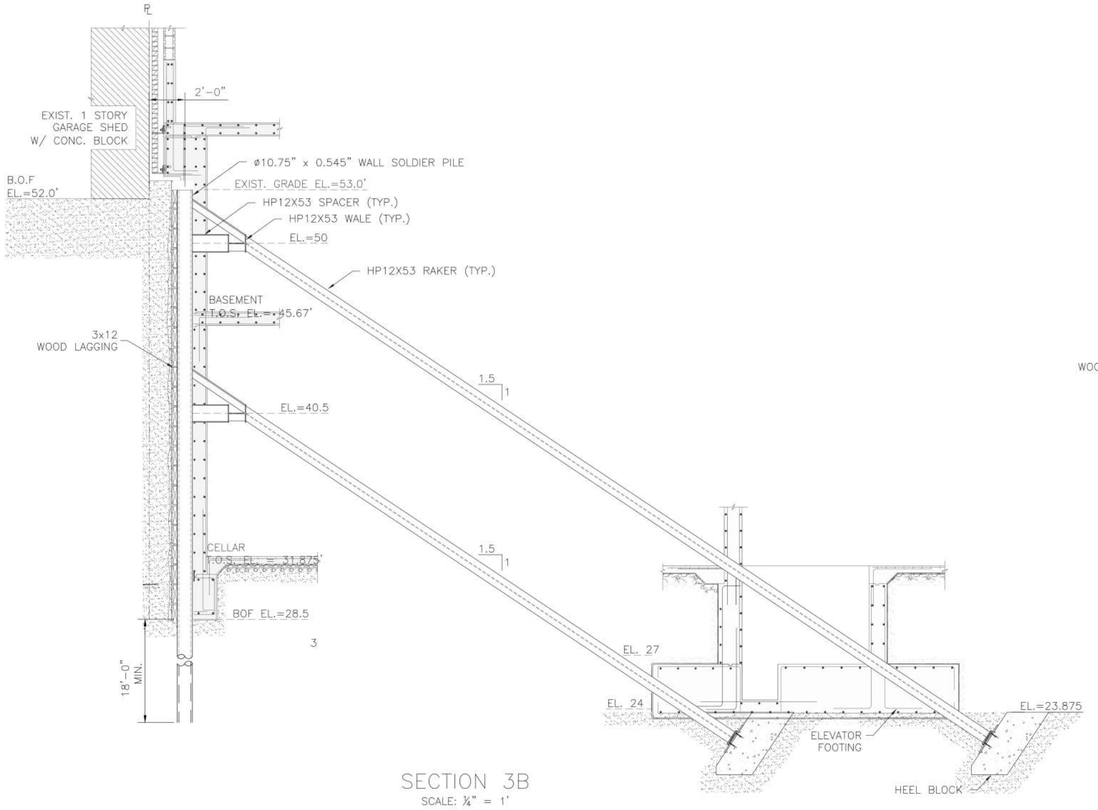

SECTION 3B
SCALE: ¼" = 1'

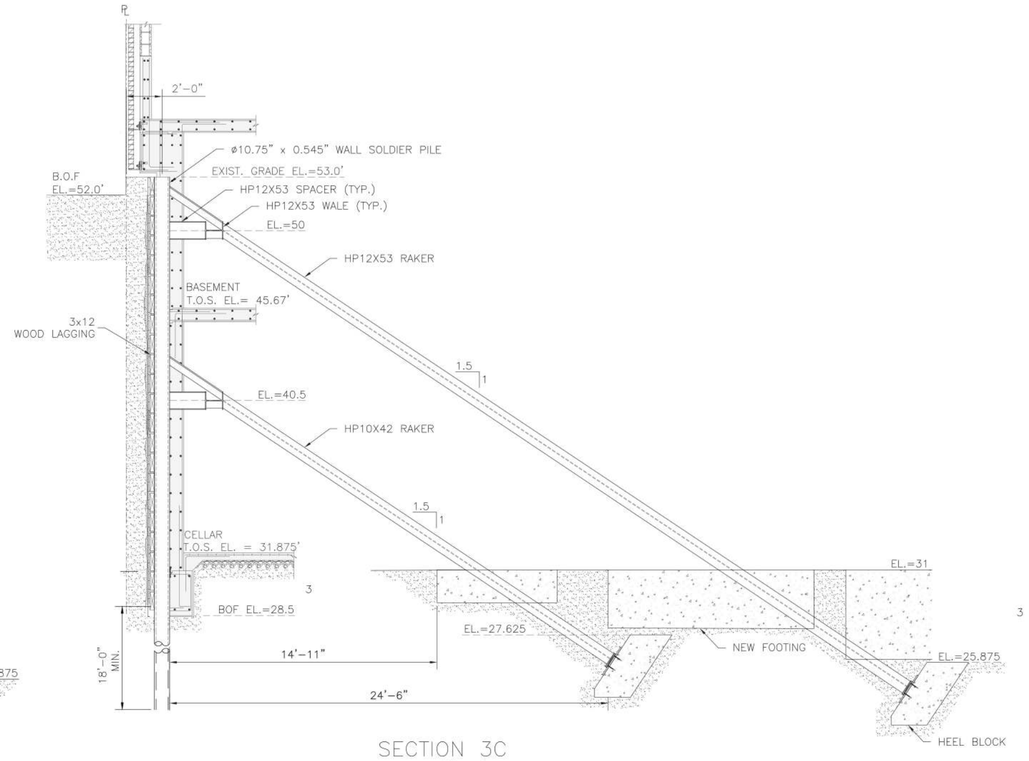

SECTION 3C
SCALE: ¼" = 1'

No.	DESCRIPTION	DATE
1	REVISION	09/05/23
2	REVISION	09/19/23
3	REVISION	10/02/23

CLIENT:

DIFIORE & SONS DEVELOPMENT
ASTORIA, NY 11105

DOB NOW JOB NO. :

Q00484597-P6

PROJECT TITLE:

23-81 31ST STREET
ASTORIA, NY 11105

DRAWING TITLE:

SHEETING AND SHORING SECTIONS

SIGN & SEAL :

DRAWING NO.

SOE-005.01

DATE : 08/21/23

PROJECT NO. : 220202

SHEET SCALE : AS NOTED

DRAWN BY : SD

CHECKED BY : ERK

SHEET: 5 OF 9

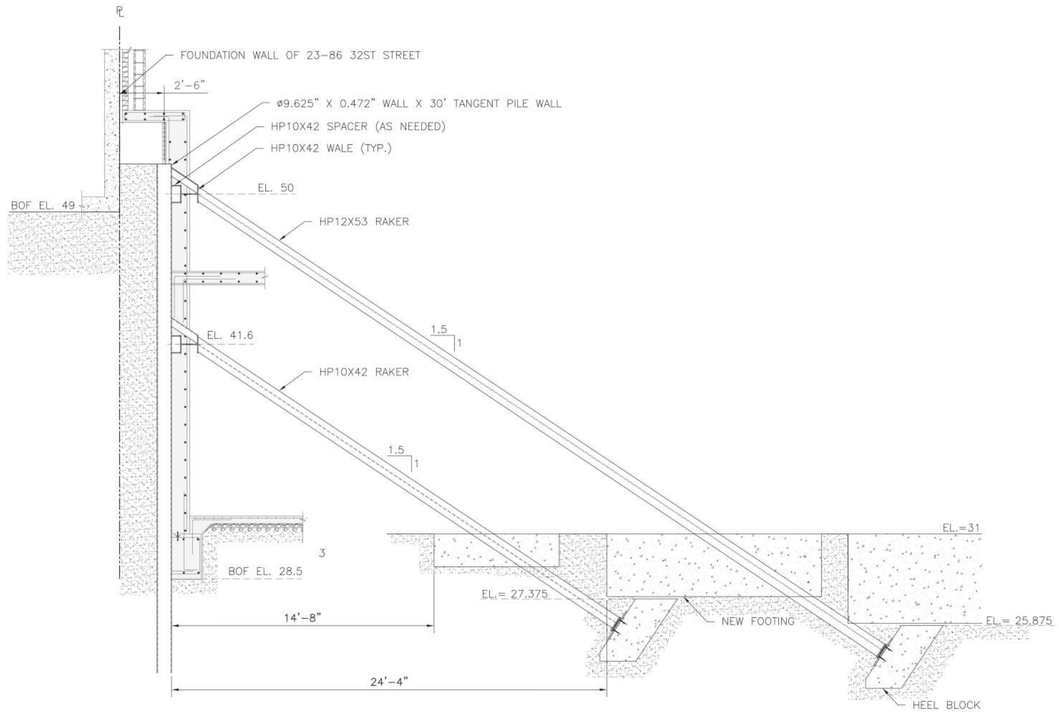

SECTION 4
SCALE: ¼" = 1'

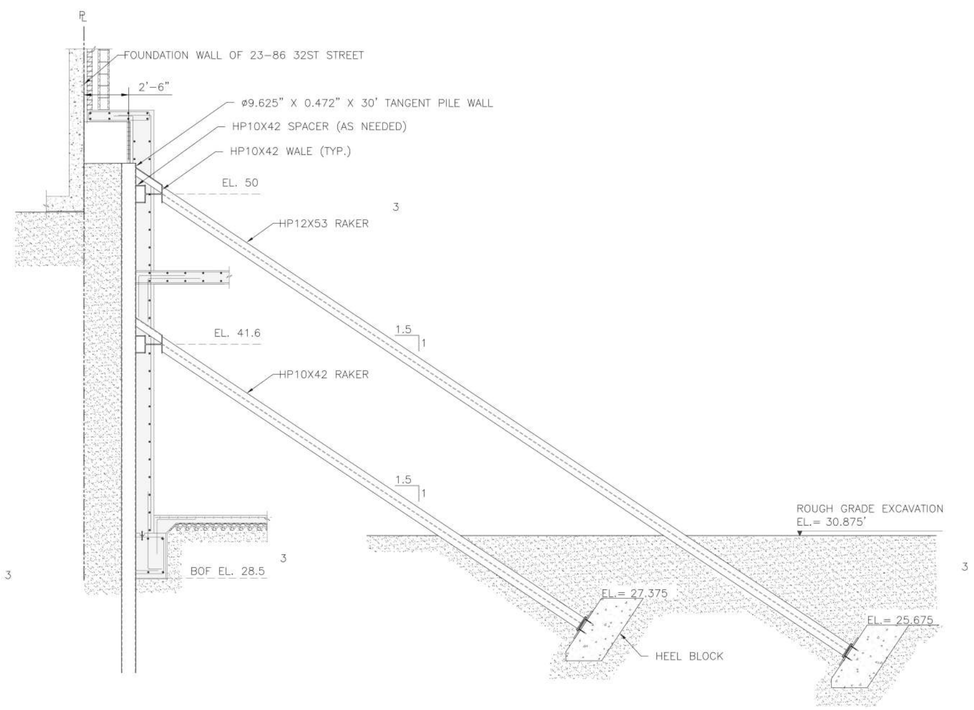

SECTION 4A
SCALE: ¼" = 1'

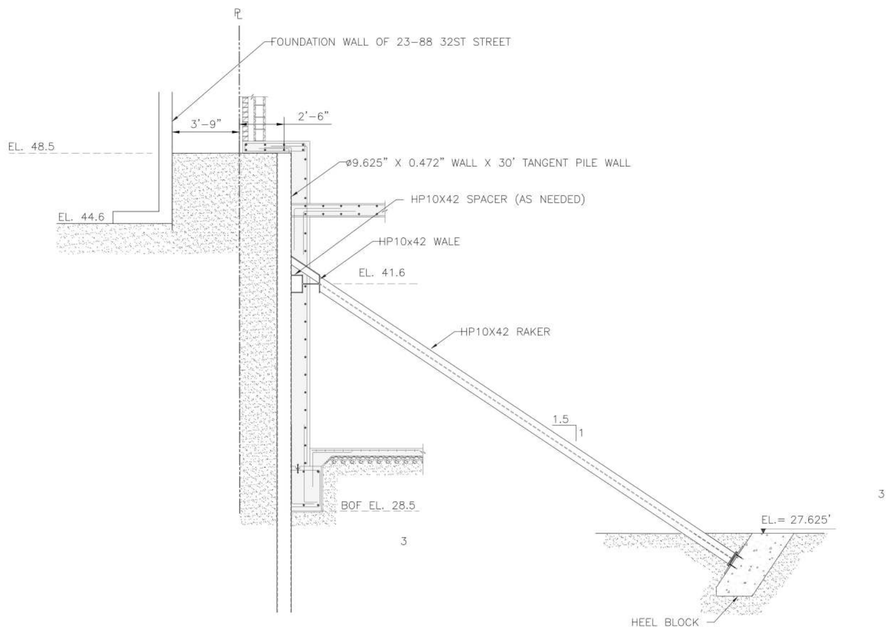

SECTION 5
SCALE: ¼" = 1'

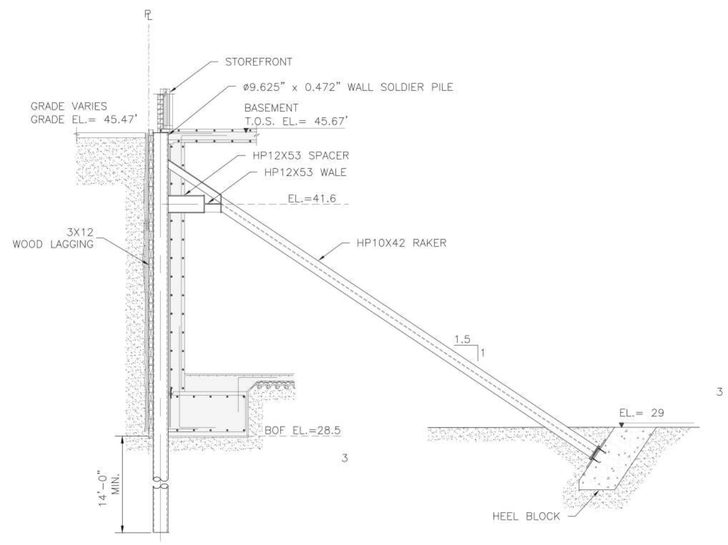

SECTION 6
SCALE: ¼" = 1'

No.	DESCRIPTION	DATE
1	REVISION	09/05/23
2	REVISION	09/19/23
3	REVISION	10/02/23

CLIENT:

DIFIORE & SONS DEVELOPMENT
ASTORIA, NY 11105

DOB NOW JOB NO. :
Q00484597-P6

PROJECT TITLE:
23-81 31ST STREET
ASTORIA, NY 11105

DRAWING TITLE:
SHEETING AND SHORING SECTIONS

SIGN & SEAL :

DRAWING NO.
SOE-006.01

DATE : 08/21/23

PROJECT NO. : 220202

SHEET SCALE : AS NOTED

DRAWN BY : SD | CHECKED BY : ERK | SHEET: 6 OF 9

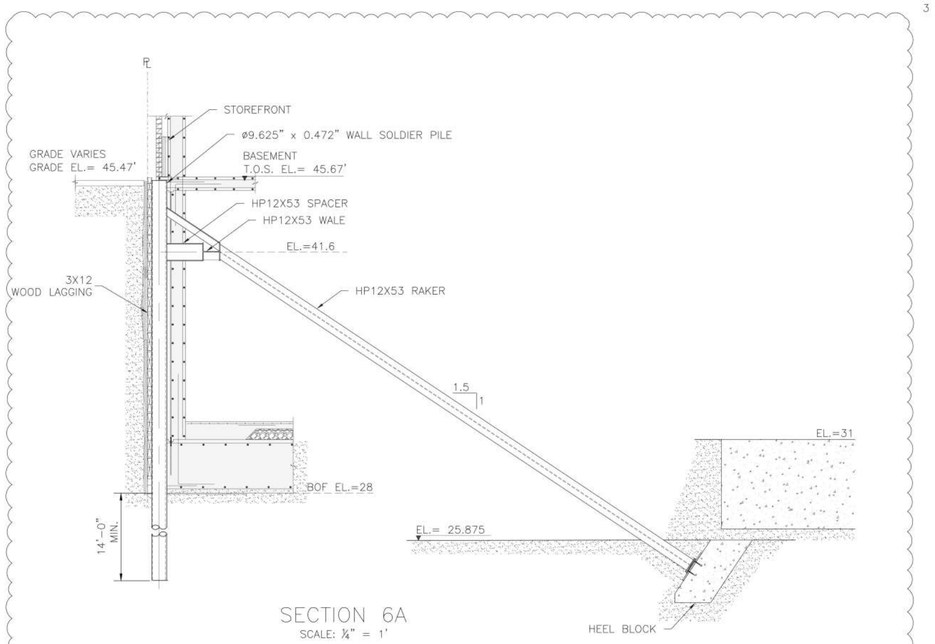

SECTION 6A
SCALE: ¼" = 1'

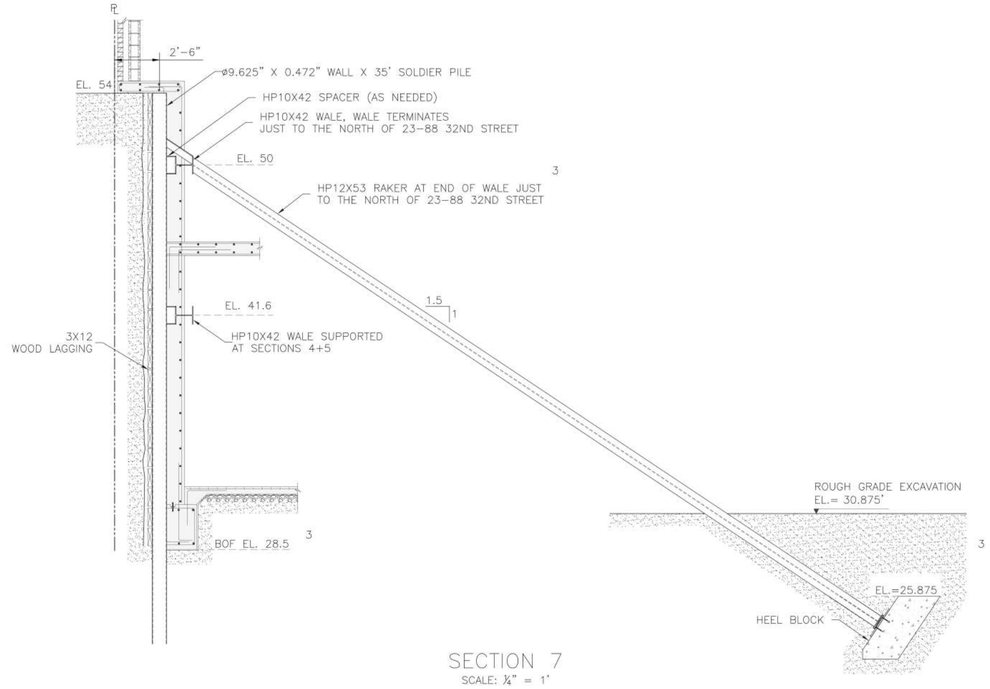

SECTION 7
SCALE: ¼" = 1'

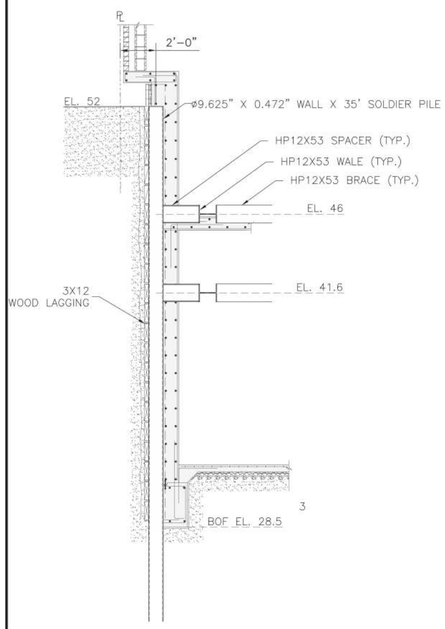

SECTION 8
SCALE: ¼" = 1'

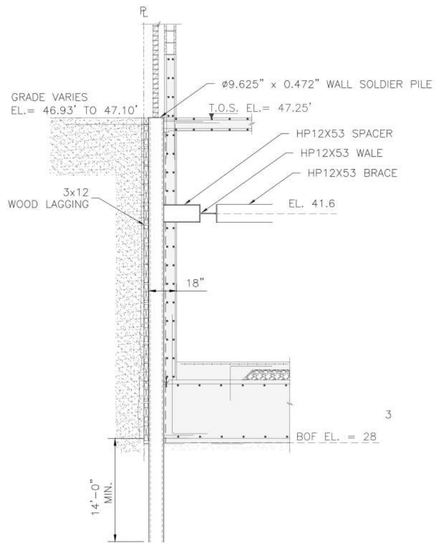

SECTION 9
SCALE: ¼" = 1'

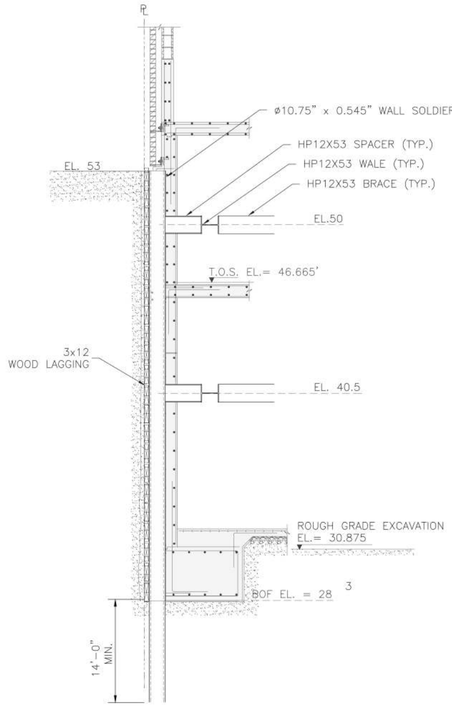

SECTION 10
SCALE: ¼" = 1'

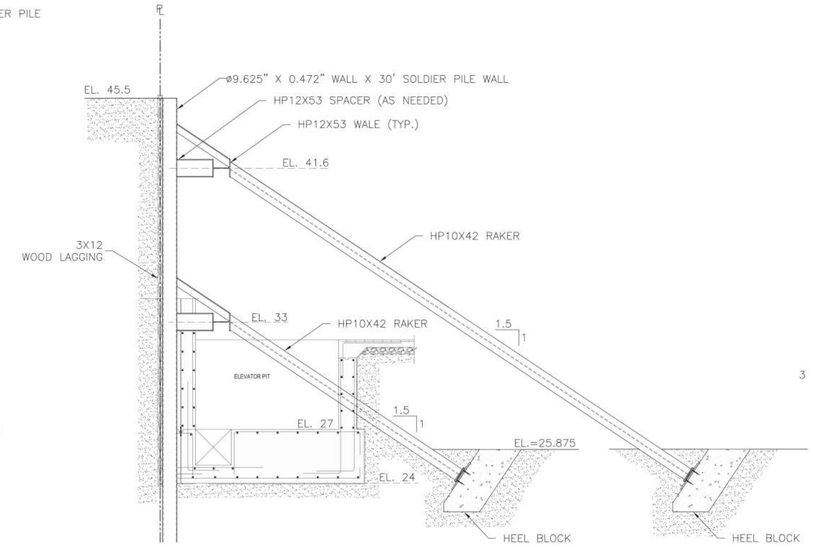

SECTION 11
SCALE: ¼" = 1'

No.	DESCRIPTION	DATE
1	REVISION	09/05/23
2	REVISION	09/19/23
3	REVISION	10/02/23

CLIENT:

DIFIORE & SONS DEVELOPMENT
ASTORIA, NY 11105

DOB NOW JOB NO. :
Q00484597-P6

PROJECT TITLE:
23-81 31ST STREET
ASTORIA, NY 11105

DRAWING TITLE:
SHEETING AND SHORING SECTIONS

SIGN & SEAL :

DRAWING NO.
SOE-007.01

DATE : 08/21/23

PROJECT NO. : 220202

SHEET SCALE : AS NOTED

DRAWN BY : SD | CHECKED BY : ERK | SHEET: 7 OF 9

STEP 1: INSTALL SOLDIER PILES.

STEP 2: CREATE BERM IN FRONT OF SOLDIER PILE.

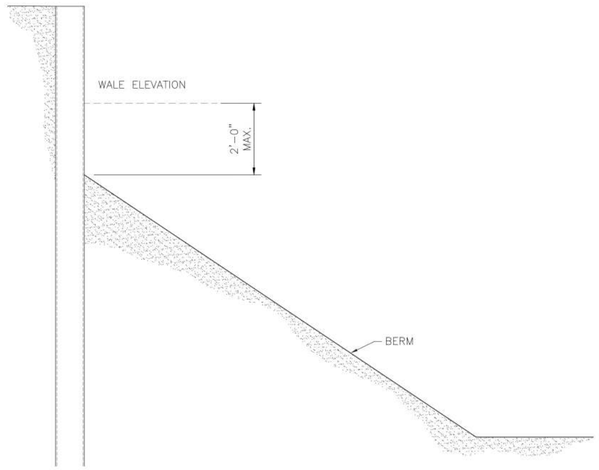

3

STEP 3: INSTALL FIRST LEVEL OF WALES, RAKERS, AND HEEL BLOCKS.

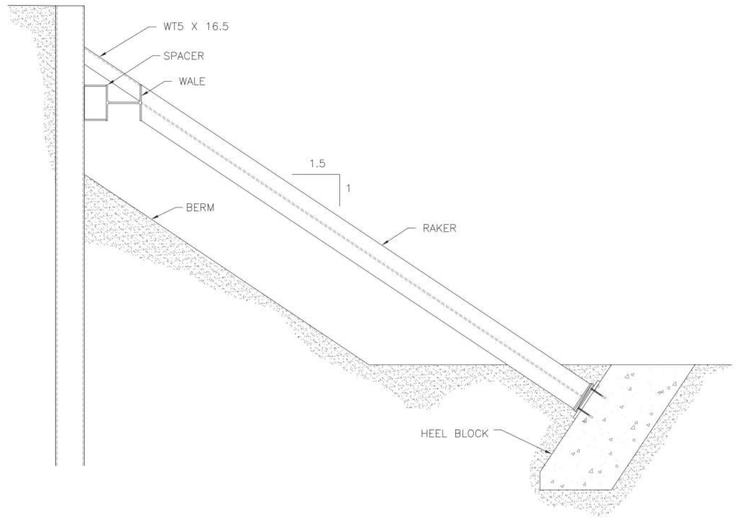

STEP 4: INSTALL LOWER LEVEL WALE, RAKER AND HEEL BLOCK.

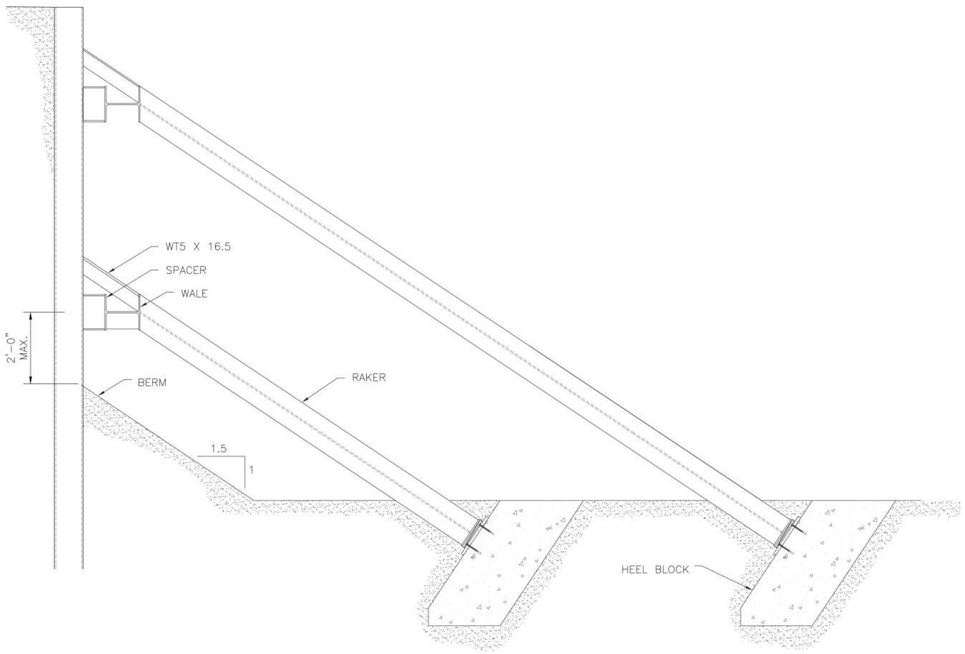

STEP 5: REMOVE SECOND BERM. SOE SYSTEM IS NOW COMPLETELY INSTALLED.

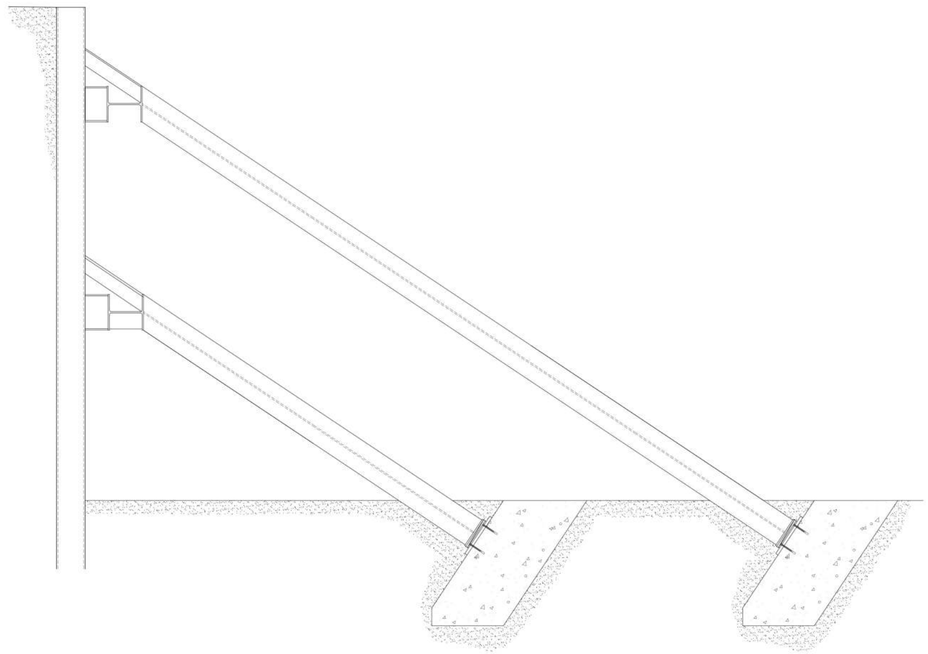

No.	DESCRIPTION	DATE
1	REVISION	09/05/23
2	REVISION	09/19/23
3	REVISION	10/02/23

CLIENT:

DIFIORE & SONS DEVELOPMENT
ASTORIA, NY 11105

DOB NOW JOB NO. :
Q00484597-P6

PROJECT TITLE:
23-81 31ST STREET
ASTORIA, NY 11105

DRAWING TITLE:
CONSTRUCTION STAGING

SIGN & SEAL :

DRAWING NO.
SOE-008.01

DATE : 08/21/23

PROJECT NO. : 220202

SHEET SCALE : AS NOTED

DRAWN BY : SD | CHECKED BY : ERK | SHEET: 8 OF 9

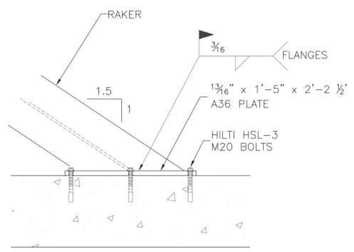

RAKER CONNECTIONS AT FOOTINGS
SCALE: 1" = 1'

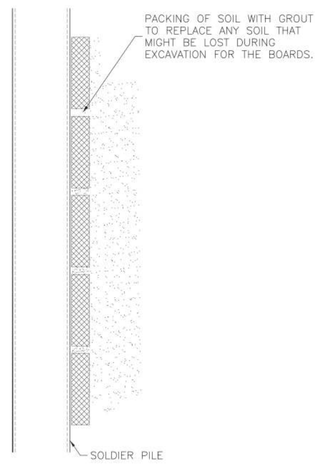

TIMBER LAGGING DETAIL
SECTION
SCALE: 1" = 1'

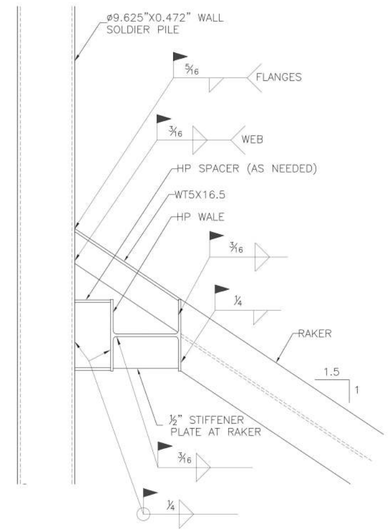

DETAIL AT RAKER AT
SECTIONS 1, 1A, 2, 2A, 4, 4A, 5 AND 7
SCALE: 1" = 1'

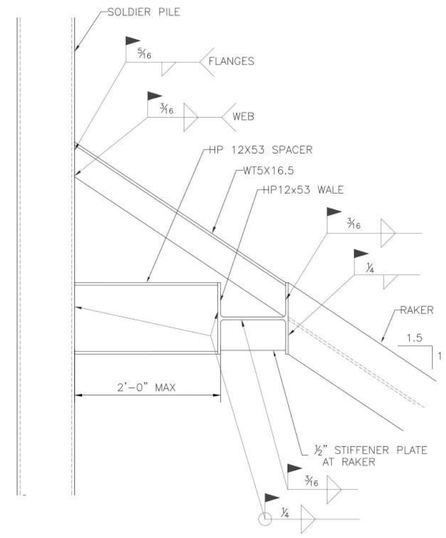

DETAIL AT RAKER AT OTHER SECTIONS
SCALE: 1" = 1'

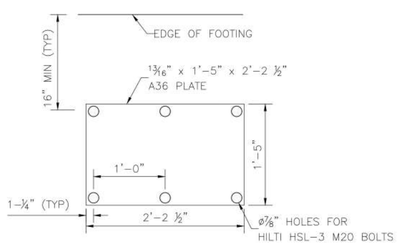

RAKER PLATE DETAIL
AT FOOTING
SCALE: 1" = 1'

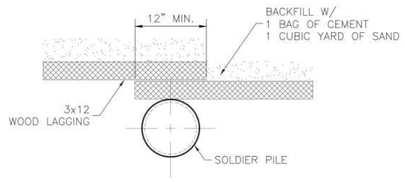

TIMBER LAGGING DETAIL
PLAN VIEW
SCALE: 1" = 1'

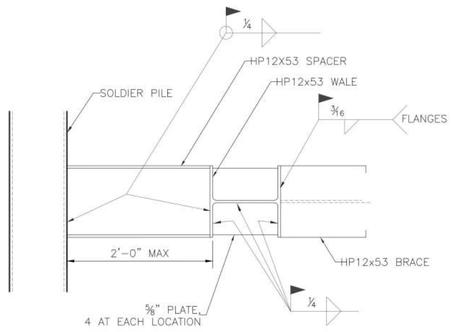

CROSS BRACE DETAIL
SCALE: 1" = 1'

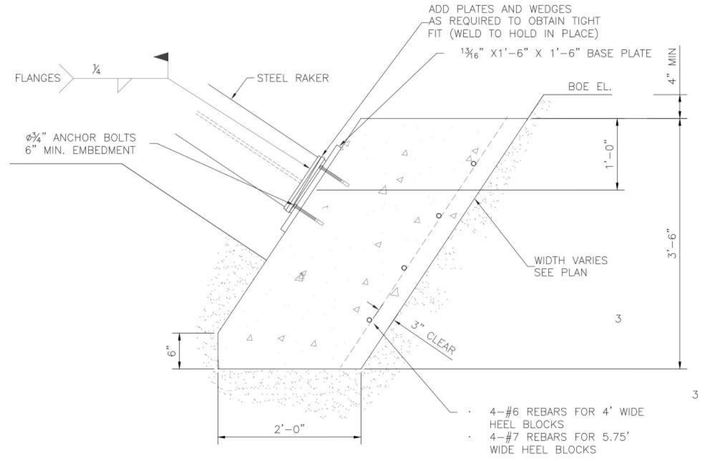

DETAIL HEEL BLOCK
SCALE: 1" = 1'

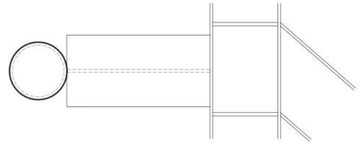

CROSS BRACE DETAIL
PLAN VIEW

NOTE: AS AN ALTERNATIVE TO A
FULL PENETRATION GROOVE WELD,
WALES MAY BE SPLICED AT RAKER
LOCATIONS

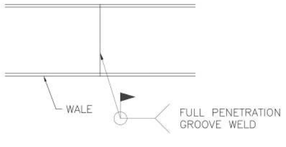

WALL SPLICE DETAIL
PLAN VIEW
SCALE: 1" = 1'

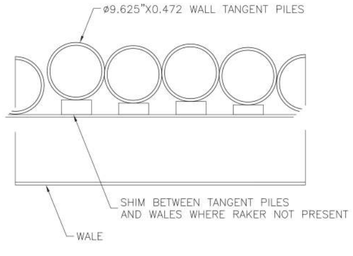

TANGENT PILE DETAIL
SCALE: 1" = 1'

No.	DESCRIPTION	DATE
1	REVISION	09/05/23
2	REVISION	09/19/23
3	REVISION	10/02/23

CLIENT:

DIFIORE & SONS DEVELOPMENT
ASTORIA, NY 11105

DOB NOW JOB NO. :
Q00484597-P6

PROJECT TITLE:
23-81 31ST STREET
ASTORIA, NY 11105

DRAWING TITLE:
GENERAL DETAILS

SIGN & SEAL :

DRAWING NO.
SOE-09.01

DATE : 08/21/23

PROJECT NO. : 220202

SHEET SCALE : AS NOTED

DRAWN BY : SD | CHECKED BY : ERK | SHEET: 9 OF 9

SCHOOL
SPEED
LIMIT
CASSONE
CAT
Miller

CATERPILLAR
CAT
304 CR