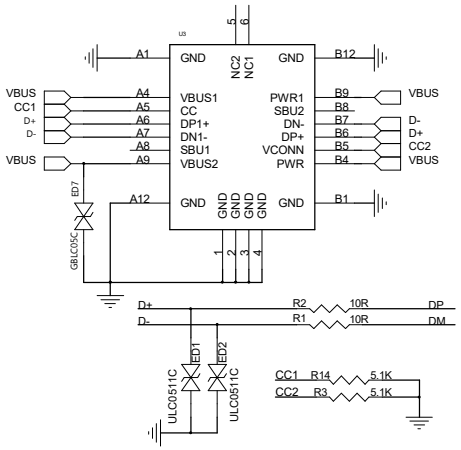
U5
GND
NC2
NC1
GND
VBUS1
CC
DP1+
DN1-
SBU1
VBUS2
PWR1
SBU2
DN-
DP+
VCONN
PWR
GND
GND
GND
GND
GND
VBUS
CC1
D+
D-
VBUS
D-
D+
CC2
VBUS
D7
GBLC05C
D+
D-
R2
10R
R1
10R
DP
DM
ED1
ED2
ULC0511C
ULC0511C
CC1 R14 5.1K
CC2 R3 5.1K

UART

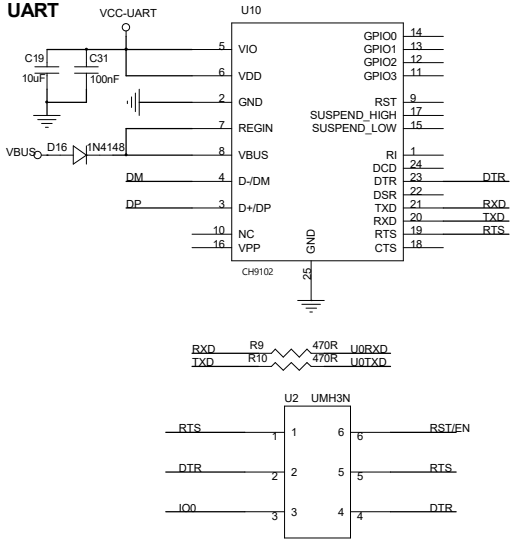
VCC-UART
U10
C19
10uF
C31
100nF
VIO
VDD
GND
REGIN
VBUS
D-/DM
D+/DP
NC
VPP
GPIO0
GPIO1
GPIO2
GPIO3
RST
SUSPEND_HIGH
SUSPEND_LOW
RI
DCD
DTR
DSR
TXD
RXD
RTS
CTS
GND
CH9102
VBUS
D16
1N4148
DM
DP
DTR
RXD
TXD
RTS
RXD R9 470R U0RXD
TXD R10 470R U0TXD
U2 UMH3N
RTS
DTR
IO0
RST/EN
RTS
DTR

Core

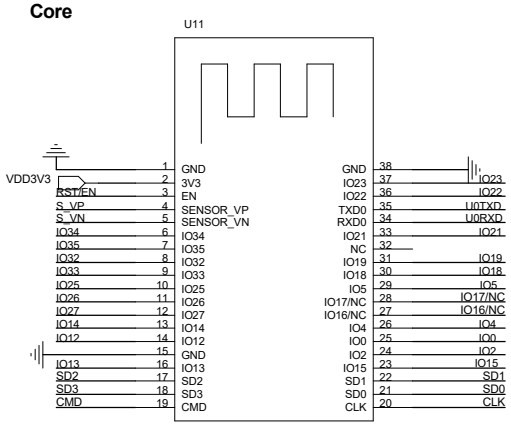
U11
VDD3V3
RST/EN
S_VP
S_VN
IO34
IO35
IO32
IO33
IO25
IO26
IO27
IO14
IO12
IO13
SD2
SD3
CMD
GND
3V3
EN
SENSOR_VP
SENSOR_VN
IO34
IO35
IO32
IO33
IO25
IO26
IO27
IO14
IO12
GND
IO13
SD2
SD3
CMD
GND
IO23
IO22
TXD0
RXD0
IO21
NC
IO19
IO18
IO5
IO17/NC
IO16/NC
IO4
IO0
IO2
IO15
SD1
SD0
CLK
ESP32-WROVER-B

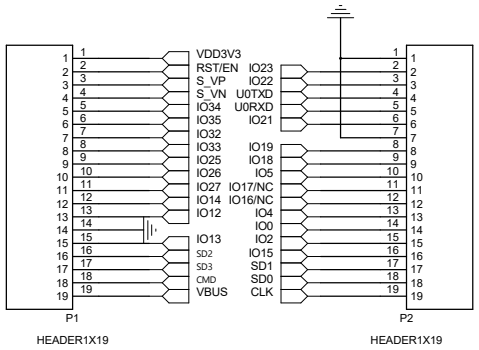
VDD3V3
RST/EN
S_VP
S_VN
IO34
IO35
IO32
IO33
IO25
IO26
IO27
IO14
IO12
IO13
SD2
SD3
CMD
VBUS
IO23
IO22
U0TXD
U0RXD
IO21
IO19
IO18
IO5
IO17/NC
IO16/NC
IO4
IO0
IO2
IO15
SD1
SD0
CLK
P1
HEADER1X19
P2
HEADER1X19

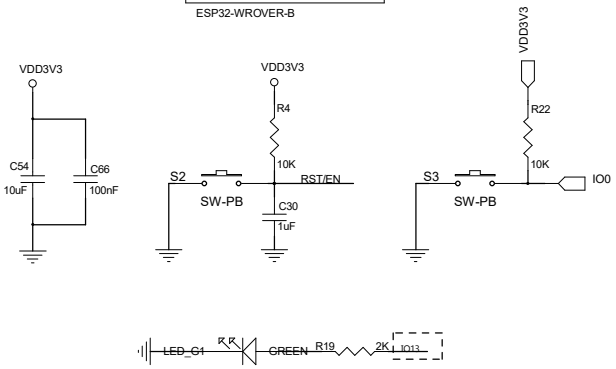
VDD3V3
C54
10uF
C66
100nF
VDD3V3
R4
10K
S2
SW-PB
RST/EN
C30
1uF
VDD3V3
R22
10K
S3
SW-PB
IO0
LED_G1
CREEN
R19
2K
IO13

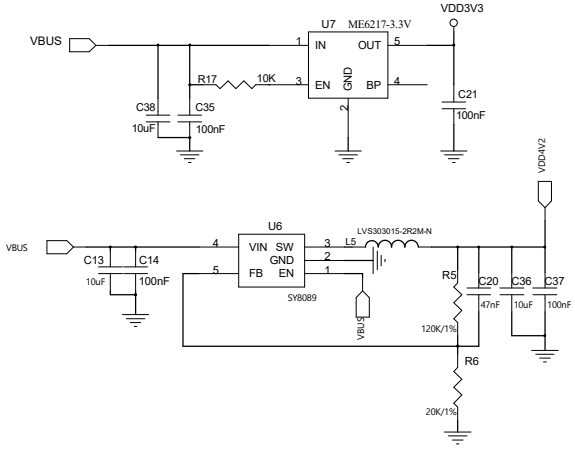
VDD3V3
VBUS
U7 ME6217-3.3V
IN
OUT
EN
GND
BP
R17
10K
C38
10uF
C35
100nF
C21
100nF
VDD4V2
VBUS
C13
10uF
C14
100nF
U6
VIN
SW
GND
FB
EN
SY8089
LVS303015-2R2M-N
L5
VBUS
R5
120K/1%
R6
20K/1%
C20
47nF
C36
10uF
C37
100nF

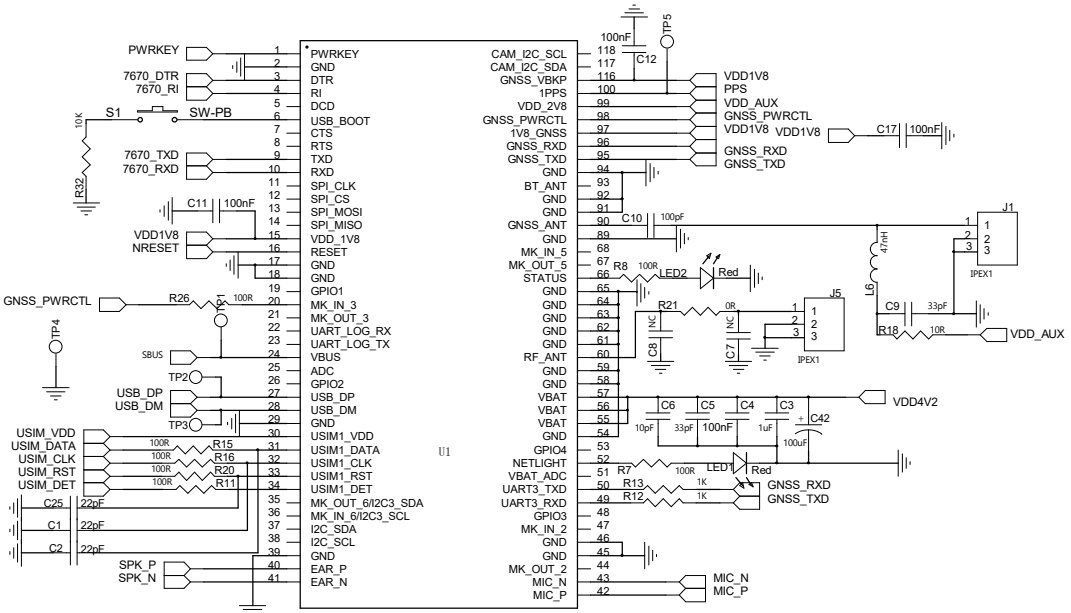
PWRKEY
7670_DTR
7670_RI
S1
SW-PB
10K
R32
7670_TXD
7670_RXD
C11
100nF
VDD1V8
NRESET
GNSS_PWRCTL
R26
100R
R27
TP4
SBUS
TP2
USB_DP
USB_DM
TP3
USIM_VDD
USIM_DATA
USIM_CLK
USIM_RST
USIM_DET
R15
R16
R20
R11
C25
22pF
C1
22pF
C2
22pF
SPK_P
SPK_N
U1
PWRKEY
GND
DTR
RI
DCD
USB_BOOT
CTS
RTS
TXD
RXD
SPI_CLK
SPI_CS
SPI_MOSI
SPI_MISO
VDD_1V8
RESET
GND
GND
GPIO1
MK_IN_3
MK_OUT_3
UART_LOG_RX
UART_LOG_TX
VBUS
ADC
GPIO2
USB_DP
USB_DM
GND
USIM1_VDD
USIM1_DATA
USIM1_CLK
USIM1_RST
USIM1_DET
MK_OUT_6/I2C3_SDA
MK_IN_6/I2C3_SCL
I2C_SDA
I2C_SCL
GND
EAR_P
EAR_N
CAM_I2C_SCL
CAM_I2C_SDA
GNSS_VBKP
1PPS
VDD_2V8
GNSS_PWRCTL
1V8_GNSS
GNSS_RXD
GNSS_TXD
GND
BT_ANT
GND
GND
GNSS_ANT
GND
MK_IN_5
MK_OUT_5
STATUS
GND
GND
GND
GND
GND
RF_ANT
GND
GND
VBAT
VBAT
VBAT
GND
GPIO4
NETLIGHT
VBAT_ADC
UART3_TXD
UART3_RXD
GPIO3
MK_IN_2
GND
GND
MK_OUT_2
MIC_N
MIC_P
100nF
C12
TP5
VDD1V8
PPS
VDD_AUX
GNSS_PWRCTL
VDD1V8
GNSS_RXD
GNSS_TXD
C17
100nF
C10
100pF
J1
IPEX1
47nH
L6
C9
33pF
R18
10R
VDD_AUX
R8
100R
LED2
Red
R21
0R
J5
IPEX1
C8
C7
VDD4V2
C6
10pF
C5
33pF
C4
100nF
C3
1uF
C42
100uF
R7
100R
LED1
Red
R13
1K
R12
1K
GNSS_RXD
GNSS_TXD
MIC_N
MIC_P

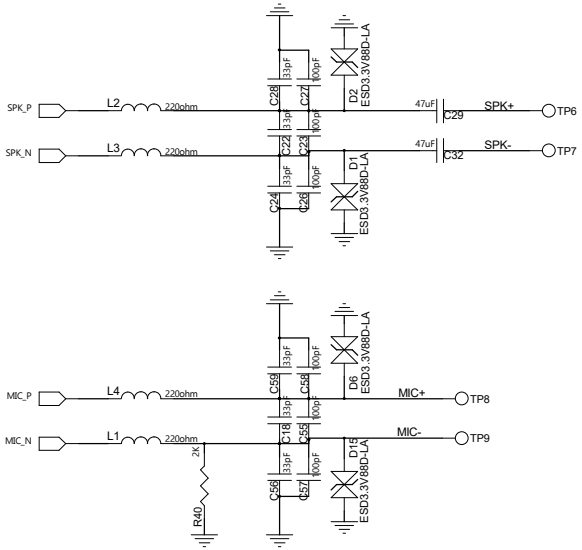
SPK_P
L2
220ohm
C28
33pF
C27
100pF
D2
ESD3.3V88D-LA
47uF
C29
SPK+
TP6
SPK_N
L3
220ohm
C22
33pF
C23
100pF
47uF
C32
SPK-
TP7
C24
33pF
C25
100pF
D1
ESD3.3V88D-LA
MIC_P
L4
220ohm
C59
33pF
C58
100pF
D6
ESD3.3V88D-LA
MIC+
TP8
MIC_N
L1
220ohm
2K
R40
C18
33pF
C55
100pF
MIC-
TP9
C56
33pF
C57
100pF
D15
ESD3.3V88D-LA

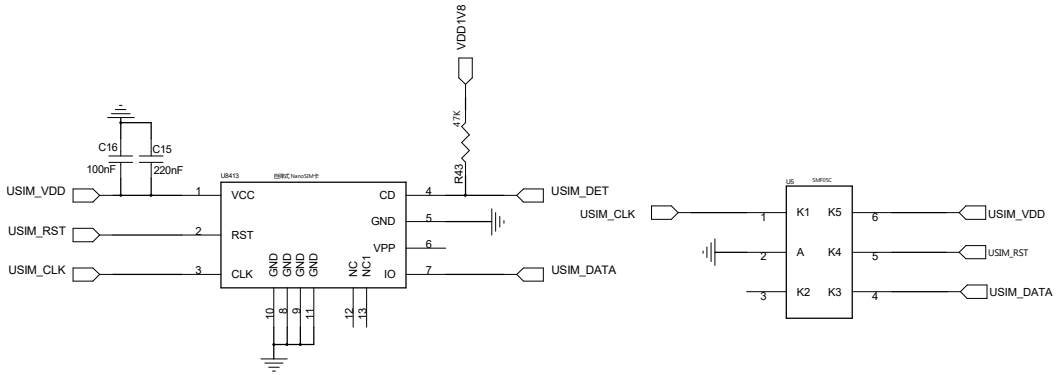
VDD1V8
47K
R43
C16
100nF
C15
220nF
USIM_VDD
USIM_RST
USIM_CLK
U8413
自测试 NanoSIM卡
VCC
RST
CLK
CD
GND
VPP
IO
GND
GND
GND
GND
NC
NC1
USIM_DET
USIM_CLK
USIM_DATA
U5
SMF05C
K1
A
K2
K5
K4
K3
USIM_VDD
USIM_RST
USIM_DATA

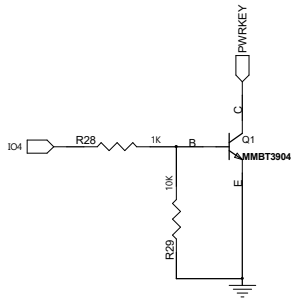
PWRKEY
C
IO4
R28
1K
B
Q1
MMBT3904
E
10K
R29

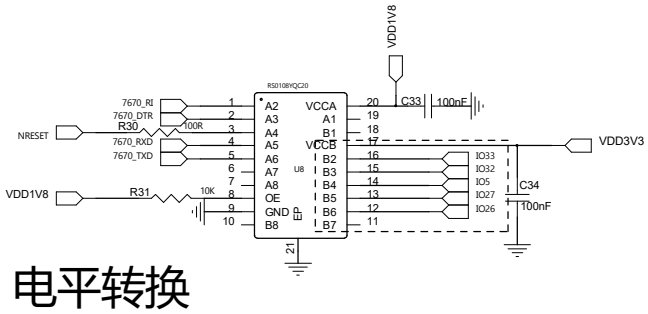
VDD1V8
RS0108YQC20
7670_RI
7670_DTR
NRESET
R30
100R
7670_RXD
7670_TXD
VDD1V8
R31
10K
A2
A3
A4
A5
A6
A7
A8
OE
GND
B8
VCCA
A1
B1
VCCB
B2
B3
B4
B5
B6
B7
U8
EP
C33
100nF
VDD3V3
IO33
IO32
IO5
IO27
IO26
C34
100nF

电平转换